PART NO.	REV	SYMBOL	DESCRIPTION	LOCATED	REASON	SIGN	DATE
4G.29U02.001	0		FIRST RELEASE			ALBERT CHENG	07/04/13

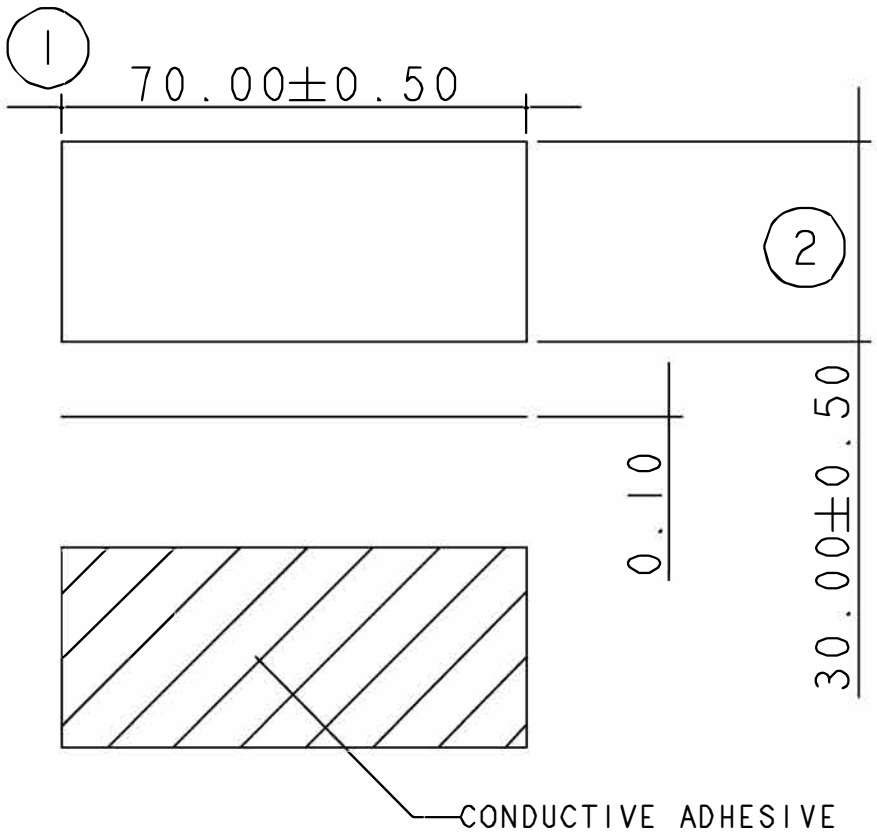

NOTES:
1. MATERIAL: CONDUCTIVE FABRIC
2. COLOUR: SILVER-GARY
3. ADHESIVE TAPE: CONDUCTIVE TAPE, t=0.1mm
4. TOLERANCE CLASS: D, UNLESS OTHERWISE SPECIFIED.
5. BALLOON SYMBOL INDICATED CRITICAL DIMENSION.
6. TRIANGLE SYMBOL INDICATED REVISION.
7. CONDUCT RESISTANCE BETWEEN CONDUCTIVE ADHESIVE & CONDUCTIVE FABRIC MUST BELOW 0.05 Ω
8. LEVEL-1 ENVIRONMENT-RELATED SUBSTANCES SPECIFIED IN SS-00259 SHOULD NEVER BE CONTAINED.
9. PURCHASE RECYCLED RESINS AND WIRE RODS ONLY FROM THE BUSINESS PARTNERS THAT SONY APPROVES AS GREEN PARTNERS

MODEL	PVMI741A_CD		NAME	CONDUCTIVE TAPE 70*30		
DRN	ALBERT CHENG	07/04/13	MATERIAL	SEE NOTES		
DSN	NORMAN HUANG	07/04/13	FINISH	NA		
CKD	NORMAN HUANG	07/04/13	SCALE	1 : 1	DIM IN	mm
APPD	JAMES C CHEN	07/04/13	SHEET	1 OF 1	CAVITIES	

Csca Corporation

TOLERANCE UNLESS OTHERWISE SPECIFIED (±)							
CLASS	A	B	C	D	E	F	G
< 8mm	0.05	0.1	0.1	0.2	0.2	0.4	0.4
8 ~ 25mm	0.08	0.15	0.15	0.3	0.3	0.6	0.6
25 ~ 80mm	0.12	0.2	0.25	0.4	0.5	0.8	1.0
80 ~ 250mm	0.25	0.3	0.4	0.6	0.8	1.2	1.5
250 ~ 800mm	0.5	0.6	0.8	1.0	1.5	2.0	3.0
> 800mm	1.0	1.0	1.5	1.7	3.0	4.0	6.0
ANGLE	0.5	0.5	0.5	0.5	1.0	1.0	1.0
FILE NAME	CONDUCTIVE_TAPE_70X30_PVMI741CD.PRT						
PART NO.	4G.29U02.001						