



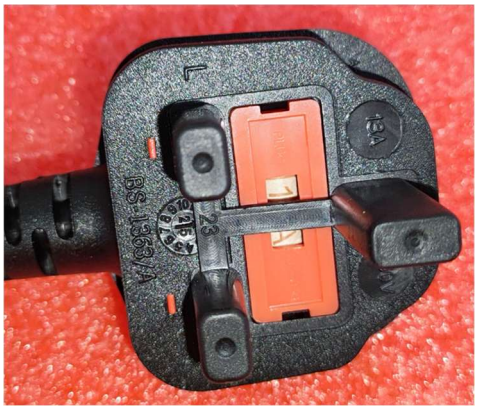

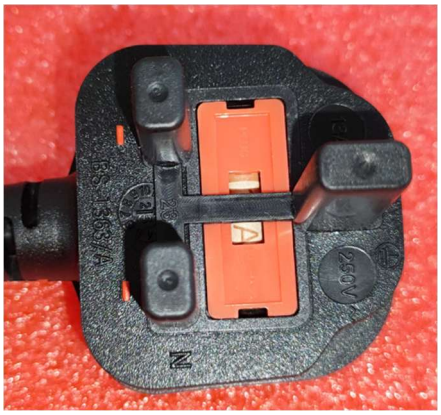

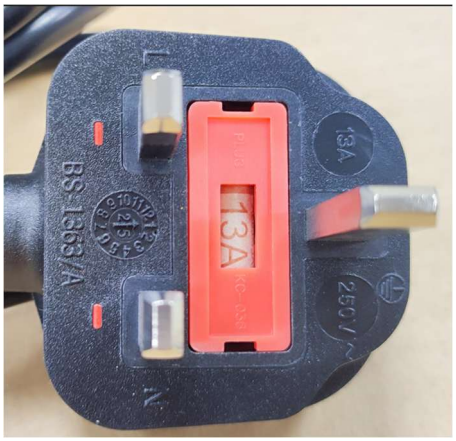



設計驗證
工程課
2025 -04- 11
發行
鈺鑽科技開發股份有限公司

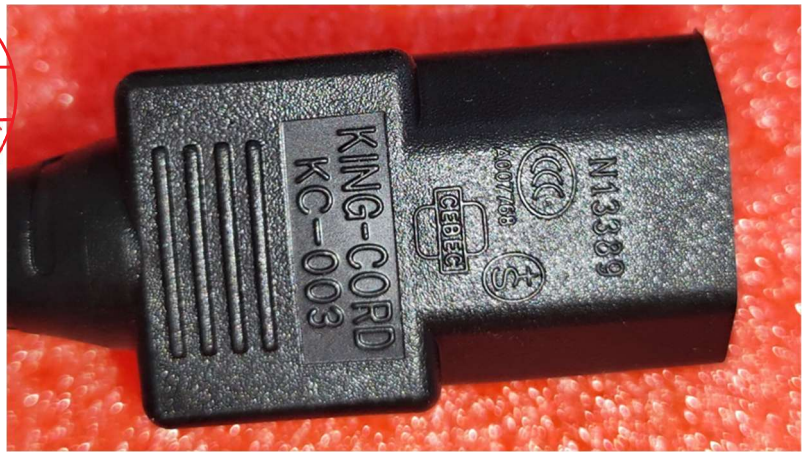

SPECIFICATION

KING-CORD

APPROVED

☑ **HEAD OFFICE & FACTORY:**
KING-CORD CO., LTD
NO. 52-5,Sia Si Hu,Shang Hu Village,
Yang Mei Township,
Tao Yuan County TAIWAN
TEL: 886-3-472-6208
FAX: 886-3-472-7751

☑ **FACTORY:**
KING-CORD ELECTRONICS (SHEN ZHEN) CO.,LTD
No.B2,The West Industry Park of Tan Tou,

TEL: 86-755-2768-2890

RoHS Compliant

KING-CORD Confidential Proprietary

CUSTOMER NAME:	鈺緯
CUSTOMER P/NO:	**3KP00001600**(K0476)
KING-CORD/NO:	**K36031H5183BR-D**
EDITION:	**G**

CUSTOMER APPR	APPR	CHECK	MADE
設計驗證 工程課 2025 -04- 11 發行 鈺緯科技開發股份有限公司			*NIE ZHE*

INDEX

1 Product Drawing

2 Plug Drawing

3 Connector Drawing

4 Sample Testing Standard

5 Safety Approval For Product

6 The Schedule For The Environment Material Management

7 COC

KING-CORD Confidential Proprietary

Safety Certificates	
KC-036	
KC-003	N13389

RoHS Compliant

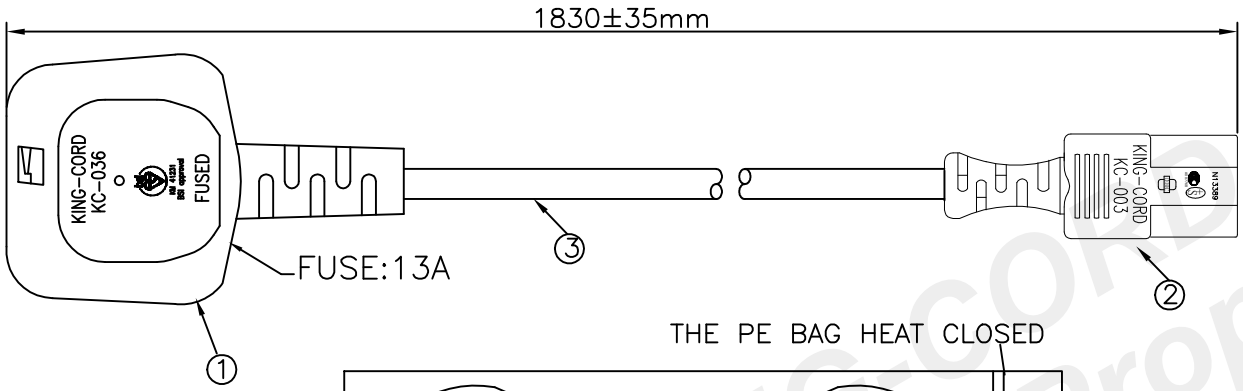

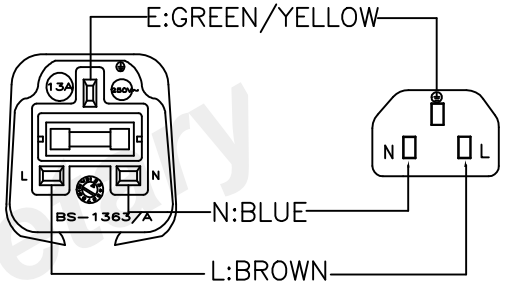

THE PE BAG HEAT CLOSED

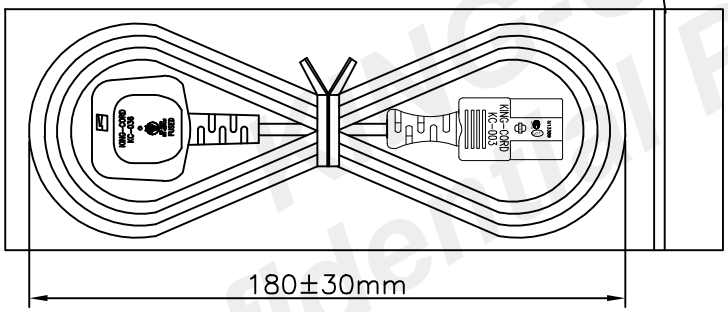

設計驗證
工程課
2025 -04- 11
發行
鈺緯科技開發股份有限公司

NOTES:
1.WEIGHT:250g/pc.
2.MADE IN SHEN ZHEN,CHINA.
3.產品無紅磷

RECORD OF CHANGE

DATE	REV	DESCRIPTION OF CHANGE
SEP.10.2009	A	NEW PRODUCT
DEC.05.2009	B	1.變更歐規新印字.
FEB.22.2019	C	1.Change KING-CORD number K36031H5183BR-D-1 to K36031H5183BR-D.
		2.Increasing KING-CORD wire manufacturers.
MAR.21.2019	D	1.Increasing Notes 3.
OCT.09.2019	E	Change the printing content of I-sheng power line
OCT.12.2023	F	KC-003 ACCORDING TO SAFETY REGULATIONS, DELETE THE WORD "S" FROM
		THE CCC LOGO
DEC.16.2024	G	According to safety regulations, change the BSI logo "KC-036"

NO:	DESCRIPTION	Q'TY	REMARK
1	Plug:KC-036,13A 250V~(BS1363)	1PC	
2	Connector:KC-003,10A 250V~(EN 60320 C13)	1PC	
3	Cable:H05VV-F 3G0.75mm² 凹印	1PC	BLACK

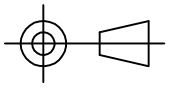

UNIT:mm

NOTES:

CUSTOMER NAME: 鈺 緯

CUSTOMER NO.: 3KP00001600 (K0476)

KING-CORD NO.: K36031H5183BR-D

KING-CORD CO.,LTD.

KING-CORD Confidential Proprietary

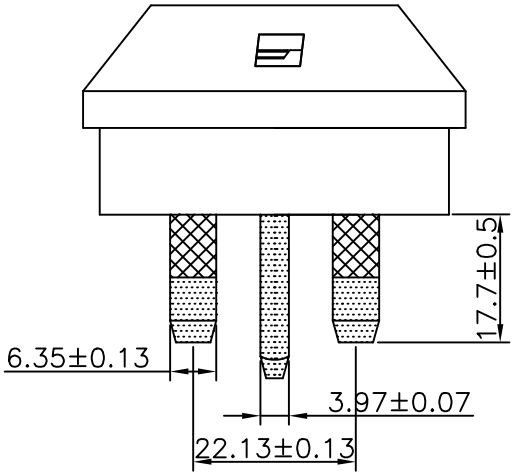

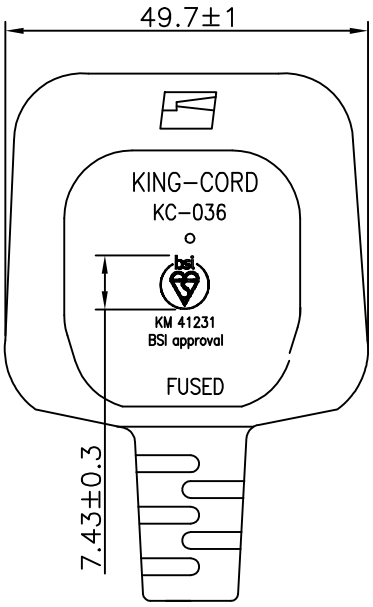

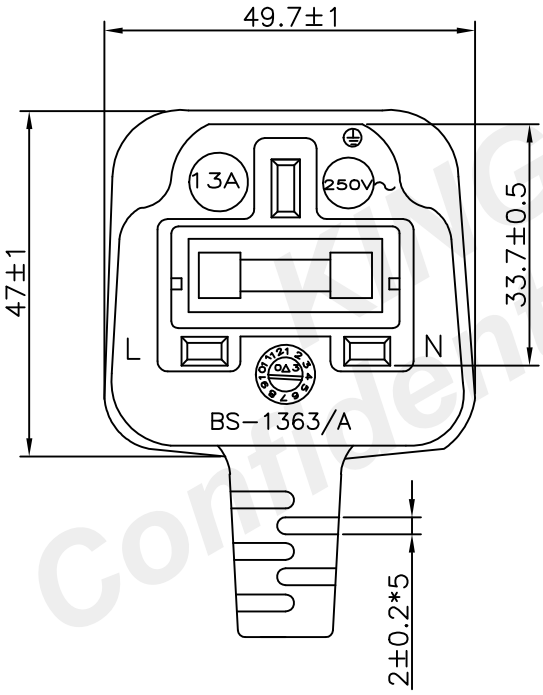

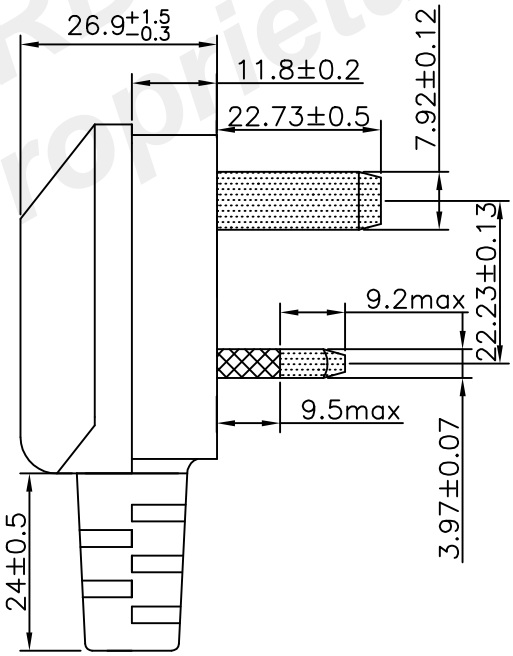

KING-CORD
Confidential Proprietary

			Drawer	FU	Unite	mm	Date	2024.09.11
			Scale	1/1	Current	13A 250V~	Drawing No	KC-036
A	NEW	24.09.11	KING-CORD CO.,LTD.					
REV	DESCRIPTION	DATE						

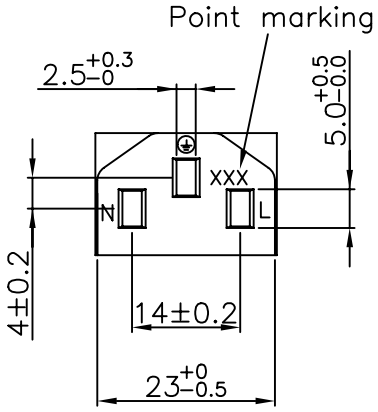

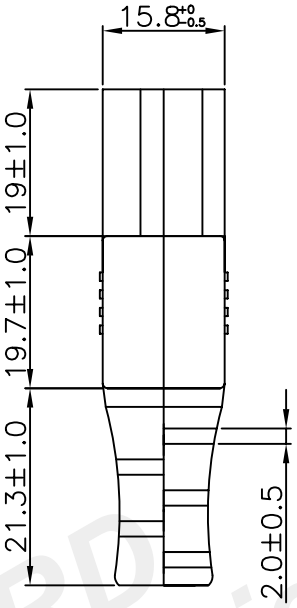

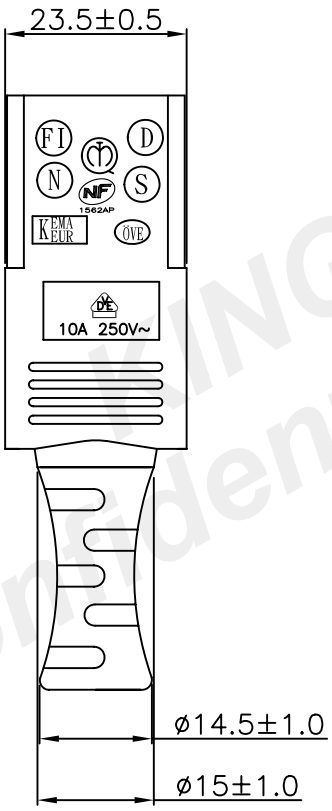

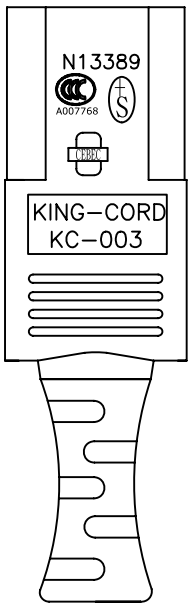

KING-CORD
Confidential Proprietary

			Drawer	liyi	Unite	mm	Date	2011.11.17
B	ACCORDING TO SAFETY REGULATIONS, DELETE THE WORD "S" FROM THE CCC LOGO	23.08.22	Scale	1/1	Current	10A 250V~	Drawing No	KC−003
A	NEW	11.11.17	KING−CORD CO.,LTD.					
REV	DESCRIPTION	DATE						

1.Scope:

This specification is applied to H05VV-F 3G0.75mm^2 power cord.

2.Applicable Safety Standard

BS1363

EN 60320 C13

3.Construction:

3.1 Plug : Catalogue No. KC-036(BSI type)

3.2 Connector : Catalogue No. KC-003(EUROPE type)

3.3 Flexible Cord Approved Manufacturers

Manufacturer	VDE File NO	Flexible cord
KING-CORD	40042910	H05VV-F
I-SHENG	40006070	

3.4 PVC Flexible Cord

TYPES	CONDUCTOR		CORE	INSULATION	JACKET	OVERALL	RATING		
				MIN THICKNESS	MIN THICKNESS	DIAMETER	Voltage	Temp.	Curent
	mm²	NO./mm		mm	mm	mm	V	℃	A
H05VV-F	0.75	24/0.192 ± 0.008	3	0.44	0.58	6.8±0.15	300/500	70	10
IN CASE OF DISPUTE, CONDUCTOR RESISTANCE SHALL BE THE REFEREE METHOD									

H5 (H05VV-F 3G0.75mm^2)

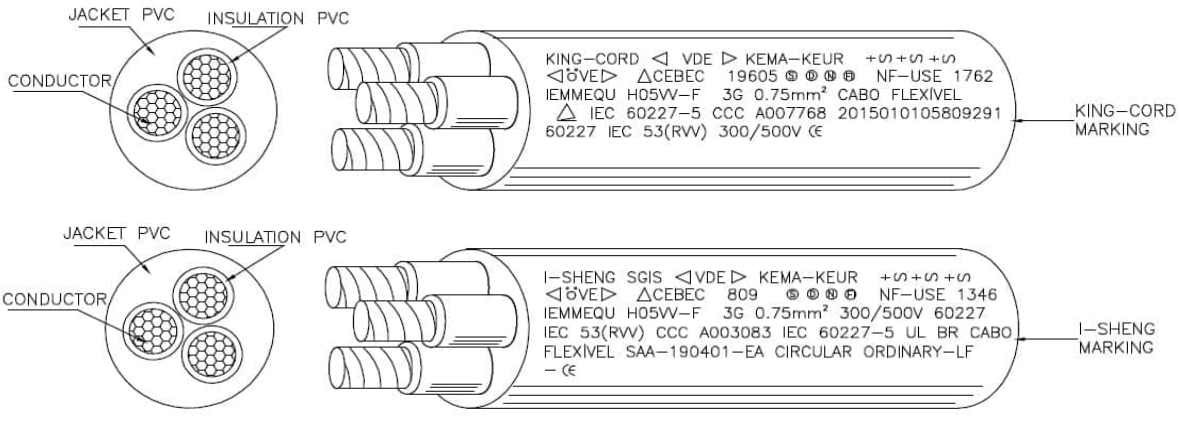

KING-CORD Confidential Proprietary

VDE Prüf- und Zertifizierungsinstitut

ZEICHENGENEHMIGUNG
MARKS APPROVAL

King Cord Co., Ltd.
8F-3 No. 124 Sianjheng 3rd. Rd.
302 JHUBEI CITY, HSINCHU COUNTRY
TAIWAN

ist berechtigt, für ihr Produkt /
is authorized to use for their product

Starkstromleitungen für allgemeine Anwendungen
- Flexible Leitungen
mit thermoplastischer PVC-Isolierung
Cables for general applications
- Flexible cables with
thermoplastic PVC insulation

die hier abgebildeten markenrechtlich geschützten Zeichen
für die ab Blatt 2 aufgeführten Typen zu benutzen /
the legally protected Marks as shown below for the types referred to on page 2 ff.

◁VDE▷ oder/*or* ◁>ɑɯ▷ oder/*or* 

Geprüft und zertifiziert nach /
Tested and certified according to

DIN EN 50525-2-11 (VDE 0285-525-2-11):2012-01; EN 50525-2-11:2011

Aktenzeichen: 1384300-5140-0005 / 216433
File ref.:

VDE Prüf- und Zertifizierungsinstitut GmbH
VDE Testing and Certification Institute
Zertifizierungsstelle / *Certification*

Ausweis-Nr. 40042910 Blatt 1
Certificate No. *Page*

Weitere Bedingungen siehe Rückseite und Folgeblätter /
further conditions see overleaf and following pages

Offenbach, 2015-08-31
(letzte Änderung / updated 2015-09-30)

M. Tasotti

VDE Zertifikate sind nur gültig bei Veröffentlichung unter:
VDE certificates are valid only when published on:
http://www.vde.com/zertifikat
http://www.vde.com/certificate

VDE

VDE Prüf- und Zertifizierungsinstitut
Zeichengenehmigung

Name und Sitz des Genehmigungs-Inhabers / *Name and registered seat of the Certificate holder*
King Cord Co., Ltd., 8F-3 No. 124 Sianjheng 3rd. Rd., 302 JHUBEI CITY, HSINCHU COUNTRY, TAIWAN

Aktenzeichen / *File ref.*
1384300-5140-0005 / 216433 / CC5 / HEG

letzte Änderung / *updated*
2015-09-30

Datum / *Date*
2015-08-31

Dieses Blatt gilt nur in Verbindung mit Blatt 1 des Zeichengenehmigungsausweises Nr. 40042910.
This supplement is only valid in conjunction with page 1 of the Certificate No. 40042910.

Starkstromleitungen für allgemeine Anwendungen - Flexible Leitungen mit thermoplastischer PVC-Isolierung

Cables for general applications - Flexible cables with thermoplastic PVC insulation

Typ(en) / *Type(s)*

H03VV-F 2...3 x 0,5...0,75 mm²	+
H03VVH2-F 2 x 0,5...0,75 mm²	+
H05VV-F 2...3 x 0,75...2,5 mm²	+
H05VVH2-F 2 x 0,75...1,0 mm²	+

Leitungsbauart *Type of cable*	Standardleitungen *General purpose cables*
Firmenzeichen *Trademark*	KING-CORD

KING-CORD Confidential Proprietary

Dieser Zeichengenehmigungs-Ausweis bildet eine Grundlage für die EG-Konformitätserklärung und CE-Kennzeichnung durch den Hersteller oder dessen Bevollmächtigten und bescheinigt die Konformität mit den grundlegenden Schutzanforderungen der **EG-Niederspannungsrichtlinie (2006/95/EG bis 19.04.2016, 2014/35/EU ab 20.04.2016).**
This Marks Approval is a basis for the EC Declaration of Conformity and the CE Marking by the manufacturer or his agent and proves the conformity with the essential safety requirements of the ***EC Low-Voltage Directive (2006/95/EC until 2016-04-19, 2014/35/EU from 2016-04-20).***

VDE Prüf- und Zertifizierungsinstitut GmbH
VDE Testing and Certification Institute
Fachgebiet CC5
Section CC5

VDE Prüf- und Zertifizierungsinstitut
Zeichengenehmigung

Ausweis-Nr. / *Certificate No.*
40042910

Beiblatt / *Supplement*

Name und Sitz des Genehmigungs-Inhabers / *Name and registered seat of the Certificate holder*
King Cord Co., Ltd., 8F-3 No. 124 Sianjheng 3rd. Rd., 302 JHUBEI CITY, HSINCHU COUNTRY, TAIWAN

Aktenzeichen / *File ref.*
1384300-5140-0005 / 216433 / CC5 / HEG

letzte Änderung / *updated*
2015-09-30

Datum / *Date*
2015-08-31

Dieses Beiblatt ist Bestandteil des Zeichengenehmigungsausweises Nr. 40042910.
This supplement is part of the Certificate No. 40042910.

Starkstromleitungen für allgemeine Anwendungen - Flexible Leitungen mit thermoplastischer PVC-Isolierung

Cables for general applications - Flexible cables with thermoplastic PVC insulation

Fertigungsstätte(n)
Place(s) of manufacture

Referenz/*Reference*	
30013100	King-Cord Electronics (Shenzhen) Co., Ltd. No. B2 The West Industry Park of TanTou, Song Gang Town 518105 BAO-AN DISTRICT, SHENZHEN CITY Guangdong CHINA

VDE Prüf- und Zertifizierungsinstitut GmbH
VDE Testing and Certification Institute
Fachgebiet CC5
Section CC5

KING-CORD Confidential Proprietary

VDE Prüf- und Zertifizierungsinstitut
Zeichengenehmigung

Ausweis-Nr. / *Certificate No.* 40042910

Infoblatt / *Info sheet*

Name und Sitz des Genehmigungs-Inhabers / *Name and registered seat of the Certificate holder*
King Cord Co., Ltd., 8F-3 No. 124 Sianjheng 3rd. Rd., 302 JHUBEI CITY, HSINCHU COUNTRY, TAIWAN

Aktenzeichen / *File ref.*	letzte Änderung / *updated*	Datum / *Date*
1384300-5140-0005 / 216433 / CC5 / HEG	2015-09-30	2015-08-31

Dieses Blatt gilt nur in Verbindung mit Blatt 1 des Zeichengenehmigungsausweises Nr. 40042910.
This supplement is only valid in conjunction with page 1 of the Certificate No. 40042910.

Genehmigung zum Benutzen des auf Seite 1 abgebildeten markenrechtlich geschützten Zeichens des VDE:

Grundlage für die Benutzung sind die Allgemeinen Geschäftsbedingungen (AGB) der VDE Prüf- und Zertifizierungsinstitut GmbH (www.vde.com\AGB-Institut). Das Recht zur Benutzung erstreckt sich nur auf die bezeichnete Firma mit den genannten Fertigungsstätten und die oben aufgeführten Produkte mit den zugeordneten Bezeichnungen. Die Fertigungsstätte muss so eingerichtet sein, dass eine gleichmäßige Herstellung der geprüften und zertifizierten Ausführung gewährleistet ist.
Die Genehmigung ist so lange gültig wie die VDE-Bestimmungen gelten, die der Zertifizierung zu- grunde gelegen haben, sofern sie nicht auf Grund anderer Bedingungen aus der VDE Prüf- und Zertifizierungsordnung (PM102) zurückgezogen werden muss.
Der Gültigkeitszeitraum einer VDE-GS-Zeichengenehmigung kann auf Antrag verlängert werden. Bei gesetzlichen und / oder normativen Änderungen kann die VDE-GS-Zeichengenehmigung ihre Gültigkeit zu einem früheren als dem angegebenen Datum verlieren.
Produkte, die das Biozid Dimethylfumarat (DMF) enthalten, dürfen gemäß der Kommissionsent- scheidung 2009/251/EG nicht mehr in den Verkehr gebracht oder auf dem Markt bereitgestellt werden.
Der VDE-Zeichengenehmigungsausweis wird ausschließlich auf der ersten Seite unterzeichnet.

Approval to use the legally protected Mark of the VDE as shown on the first page:
Basis for the use are the general terms and conditions of the VDE Testing and Certification Institute (www.vde.com\terms-institute). The right to use the mark is granted only to the mentioned company with the named places of manufacture and the listed products with the related type references. The place of manufacture shall be equipped in a way that a constant manufacturing of the certified construction is assured.
The approval is valid as long as the VDE specifications are in force, on which the certification is based on, unless it is withdrawn according to the VDE Testing and Certification Procedure (PM102E).
The validity period of a VDE-GS-Mark Approval may be prolonged on request. In case of changes in legal and / or normative requirements, the validity period of a VDE-GS-Mark Approval may be shortened.
Products containing the biocide dimethylfumarate (DMF) may not be marketed or made available on the EC market according to the Commission Decision 2009/251/EC.
The approval is solely signed on the first page.

King Cord Co. Ltd. Proprietary

ZEICHENGENEHMIGUNG
MARKS APPROVAL

I-Sheng Electric Wire & Cable Co., Ltd.
52 Tin Hwu Road, Ta Hua Village
33334 GWAI SAN, TAOYUAN HSIEN
TAIWAN

ist berechtigt, für ihr Produkt /
is authorized to use for their product

Starkstromleitungen für allgemeine Anwendungen
- Flexible Leitungen
mit thermoplastischer PVC-Isolierung
Cables for general applications
- Flexible cables with
thermoplastic PVC insulation

die hier abgebildeten markenrechtlich geschützten Zeichen
für die ab Blatt 2 aufgeführten Typen zu benutzen /
the legally protected Marks as shown below for the types referred to on page 2 ff.

◁VDE▷ oder/*or* ◁>ɑɯ▷ oder/*or* 

Geprüft und zertifiziert nach /
Tested and certified according to

DIN EN 50525-2-11 (VDE 0285-525-2-11):2012-01; EN 50525-2-11:2011

Aktenzeichen: 1276303-5140-0005 / 170954
File ref.:

VDE Prüf- und Zertifizierungsinstitut GmbH
VDE Testing and Certification Institute
Zertifizierungsstelle / *Certification*

Ausweis-Nr. 40006070 Blatt 1
Certificate No. *Page*

Weitere Bedingungen siehe Rückseite und Folgeblätter /
further conditions see overleaf and following pages

Offenbach, 2003-04-25
(letzte Änderung/updated 2012-10-12)

S. Berber

VDE Zertifikate sind nur gültig bei Veröffentlichung unter:
VDE certificates are valid only when published on:
http://www.vde.com/zertifikat
http://www.vde.com/certificate

Name und Sitz des Genehmigungs-Inhabers / *Name andregistered seat of the Certificate holder*
I-Sheng Electric Wire & Cable Co., Ltd., 52 Tin Hwu Road, Ta Hua Village, 33334 GWAI SAN, TAOYUAN HSIEN, TAIWAN

Aktenzeichen / *File ref.*
1276303-5140-0005 / 170954 / FG42 / HEG

letzte Änderung / *updated* 2012-10-12
Datum / *Date* 2003-04-25

Dieses Blatt gilt nur in Verbindung mit Blatt 1 des Zeichengenehmigungsausweises Nr. 40006070
This supplement is only valid in conjunction with page 1 of the Certificate No. 40006070.

Starkstromleitungen für allgemeine Anwendungen
- Flexible Leitungen
mit thermoplastischer PVC-Isolierung
Cables for general applications
- Flexible cables with
thermoplastic PVC insulation

Typ(en) / *Type(s)*:

H03VV-F 2...3 x 0,5...0,75 mm²	+
H03VVH2-F 2 x 0,5...0,75 mm²	+
H05VV-F 2...5 x 0,75..2,5 mm²	+
H05VVH2-F 2 X 0,75...1,0 mm²	+

Leitungsbauart *Type of cable*	Standardleitungen *General purpose cables*
Firmenzeichen *Trademark*	I-SHENG SGIS

Dieser Zeichengenehmigungs-Ausweis bildet eine Grundlage für die EG-Konformitätserklärung und CE-Kennzeichnung durch den Hersteller oder dessen Bevollmächtigten und bescheinigt die Konformität mit den grundlegenden Schutzanforderungen der **EG-Niederspannungsrichtlinie 2006/95/EG** mit ihren Änderungen.
*This Marks Approval is a basis for the EC Declaration of Conformity and the CE Marking by the manufacturer or his agent and proves the conformity with the essential safety requirements of the **EC Low-Voltage Directive 2006/95/EC** including amendments.*

VDE Prüf- und Zertifizierungsinstitut GmbH
VDE Testing and Certification Institute
Fachgebiet FG42
Section FG42

KING-CORD Confidential Proprietary

VDE Prüf- und Zertifizierungsinstitut
Zeichengenehmigung

Ausweis-Nr. / Certificate No. 40006070

Beiblatt / Supplement

Name und Sitz des Genehmigungs-Inhabers / *Name andregistered seat of the Certificate holder*
I-Sheng Electric Wire & Cable Co., Ltd., 52 Tin Hwu Road, Ta Hua Village, 33334 GWAI SAN, TAOYUAN HSIEN, TAIWAN

Aktenzeichen / *File ref.*
1276303-5140-0005 / 170954 / FG42 / HEG

letzte Änderung / *updated* 2012-10-12

Datum / *Date* 2003-04-25

Dieses Beiblatt ist Bestandteil des Zeichengenehmigungsausweises Nr. 40006070.
This supplement is part of the Certificate No. 40006070.

Starkstromleitungen für allgemeine Anwendungen
- Flexible Leitungen
mit thermoplastischer PVC-Isolierung
Cables for general applications
- Flexible cables with
thermoplastic PVC insulation

Fertigungsstätte(n)
Place(s) of manufacture

Referenz/*Reference*	
30006550	I-Sheng Mfg (Song Gang) Factory Tang Xiayong Road Songgang Town 518105 BAOAN AREA, SHENZHEN Guangdong CHINA

VDE Prüf- und Zertifizierungsinstitut GmbH
VDE Testing and Certification Institute
Fachgebiet FG42
Section FG42

KING-CORD
Confidential Proprietary

VDE Prüf- und Zertifizierungsinstitut
Zeichengenehmigung

Ausweis-Nr. / Certificate No. 40006070

Infoblatt / Info sheet

Name und Sitz des Genehmigungs-Inhabers / *Name andregistered seat of the Certificate holder*
I-Sheng Electric Wire & Cable Co., Ltd., 52 Tin Hwu Road, Ta Hua Village, 33334 GWAI SAN, TAOYUAN HSIEN, TAIWAN

Aktenzeichen / *File ref.*	letzte Änderung / *updated*	Datum / *Date*
1276303-5140-0005 / 170954 / FG42 / HEG	2012-10-12	2003-04-25

Dieses Blatt gilt nur in Verbindung mit Blatt 1 des Zeichengenehmigungsausweises Nr. 40006070
This supplement is only valid in conjunction with page 1 of the Certificate No. 40006070.

Genehmigung zum Benutzen des auf Seite 1 abgebildeten markenrechtlich geschützten Zeichens des VDE:

Grundlage für die Benutzung sind die Allgemeinen Geschäftsbedingungen (AGB) der VDE Prüf- und Zertifizierungsinstitut GmbH (www.vde.com\AGB-Institut). Das Recht zur Benutzung erstreckt sich nur auf die bezeichnete Firma mit den genannten Fertigungsstätten und die oben aufgeführten Produkte mit den zugeordneten Bezeichnungen. Die Fertigungsstätte muss so eingerichtet sein, dass eine gleichmäßige Herstellung der geprüften und zertifizierten Ausführung gewährleistet ist.
Die Genehmigung ist so lange gültig wie die VDE-Bestimmungen gelten, die der Zertifizierung zugrunde gelegen haben, sofern sie nicht auf Grund anderer Bedingungen aus der VDE Prüf- und Zertifizierungsordnung (PM102) zurückgezogen werden muss.
Der Gültigkeitszeitraum einer VDE-GS-Zeichengenehmigung kann auf Antrag verlängert werden. Bei gesetzlichen und / oder normativen Änderungen kann die VDE-GS-Zeichengenehmigung ihre Gültigkeit zu einem früheren als dem angegebenen Datum verlieren.
Produkte, die das Biozid Dimethylfumarat (DMF) enthalten, dürfen gemäß der Kommissionsentscheidung 2009/251/EG nicht mehr in den Verkehr gebracht oder auf dem Markt bereitgestellt werden.
Der VDE-Zeichengenehmigungsausweis wird ausschließlich auf der ersten Seite unterzeichnet.

Approval to use the legally protected Mark of the VDE as shown on the first page:
Basis for the use are the general terms and conditions of the VDE Testing and Certification Institute (www.vde.com\terms-institute). The right to use the mark is granted only to the mentioned company with the named places of manufacture and the listed products with the related type references. The place of manufacture shall be equipped in a way that a constant manufacturing of the certified construction is assured.
The approval is valid as long as the VDE specifications are in force, on which the certification is based on, unless it is withdrawn according to the VDE Testing and Certification Procedure (PM102E).
The validity period of a VDE-GS-Mark Approval may be prolonged on request. In case of changes in legal and / or normative requirements, the validity period of a VDE-GS-Mark Approval may be shortened.
Products containing the biocide dimethylfumarate (DMF) may not be marketed or made available on the EC market according to the Commission Decision 2009/251/EC.
The approval is solely signed on the first page.

KING-CORD Confidential Proprietary

No.	Items項目	Conditions for Test測試條件	Specification判定規格
1	Insulation Resistance 絕緣阻抗 (IEC884 C17 OR IEC320 C15)	A quantity of No.7 lead drop shot is to be placed in a container,Apply a voltage of 500V DC for 1 min. at an ambient temperature of 25±5℃,between: A)Live parts of opposite polarity B)Live parts and ground or contact with ground afer which the measurement shall be made. Show below as: Megohmmeter 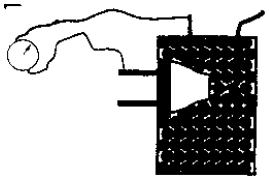	5MΩ or more
2	Dielectric Strength 電氣強度 (IEC884 C17 OR IEC320 C15)	The test potential is to be supplied from a 500VA or large capacity testing transformer,and be increased from zero until 2000V(in fact,required 1250V) is reached,then held at the voltage for 1min.Current leakage 2mA. A)Live parts of opposite polarity B)Live parts and ground or contact with ground C)Between conductor and outside body Frequency:50/60Hz 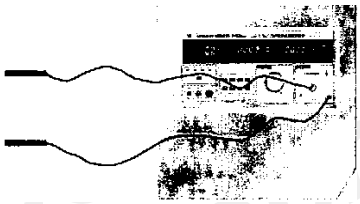	Without breakdown or flashover
3	Moisture Resistance 抗潮濕性 (IEC884 C16.3 OR IEC320 C14)	The humidity cabinet can be used. Relative humidity:91%-95% Temperature: 20-30℃ The specimens are kept in the cabinet for -168h(7 days) for connector with earthing contact,and for appliance inlets with earthing accessories,not incorporated in other equipment -48h(2 days) in all other cases.	After this treament, the specimen shall be withstand dieletric strength
4	Temperature Rise 溫升測試 (IEC884 C19 OR IEC320 C21)	Test current:1.25 times rated cur Test time for1h Contact show in below: 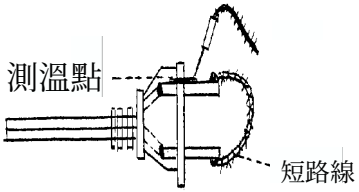	The temperature rise of the terminals and contact is no more than 45K
5	Contact Resistance 接觸阻抗 (IEC884 C11.5)	Insert the cord connector straight into the receptacle, measurement shall be made between the connector and the receptacle only.Test current :1A DC. Ambient temperature :25±5.Insert the cord connector into the receptacle as shown below ,and measure the contact resistance by the voltage drop method. 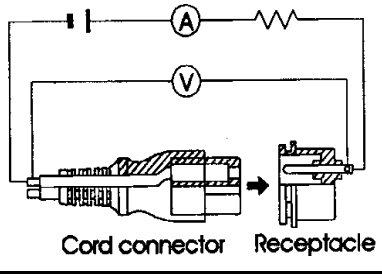	No more than 50mΩ

KINGCO Confidential Proprietary

<table>
<tr><th>No.</th><th>Items 項目</th><th>Conditions for Test 測試條件</th><th>Specification判定規格</th></tr>
<tr>
<td>6</td>
<td>Withdraw Force
插拔力
(IEC320 C16)</td>
<td>Withdraw the connector straight into the standard guage (mating plug),First The connector is inserted to the full depth into and withdraw from the appropriate appliance inlet 10 times,It is then again inserted for a principal mass is such that it exerts a force equal specified in the table .Verification of the minimum withdraw force is applied to each connector,the total mass of pplicable force as show in table.
<table>
<tr><th rowspan="2">Type</th><th colspan="3">Withdraw force N(kg)</th></tr>
<tr><th colspan="2">Multi-pin gauge</th><th>Single-pin gauge</th></tr>
<tr><th></th><th>Maximum</th><th>Minimum</th><th>Minimum</th></tr>
<tr><td>0.2A~2.5A</td><td>50(5.1)</td><td>13(1.3)</td><td>1.5(0.15)</td></tr>
<tr><td>＞2.5A~6A</td><td>50(5.1)</td><td>13(1.3)</td><td>1.5(0.15)</td></tr>
<tr><td>＞6A~10A</td><td>50(5.1)</td><td>13(1.3)</td><td>1.5(0.15)</td></tr>
<tr><td>＞10A~16A</td><td>60(6.1)</td><td>15(1.5)</td><td>2.0(0.20)</td></tr>
<tr><td>＞16A~32A</td><td>80(8.1)</td><td>30(3.1)</td><td>3.0(0.3)</td></tr>
</table>
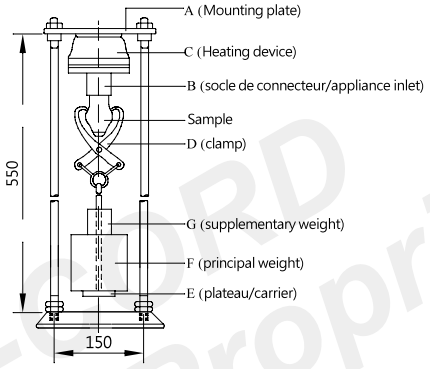

</td>
<td>During the verification of the maximum withdraw force test,The principal mass is hung on the connector without jolting and the supplementary mass is allowed to fall from a height of 5cm on to the principal mass,the connector shall not remain in the appliance After verification of the minimum withdraw force test,the gauge shall be not removed 0.079inch(2mm).During the single-pin gauge test,the gauge shall not fall from the contact assembly without 3sec.</td>
</tr>
<tr>
<td>7</td>
<td>Flexing Test
彎曲測試
(IEC884 C23.4 OR IEC320 C22.4)</td>
<td>A molded-on attachment plug and cord connector shall be capable withstanding the test specified as show in the table: molded to 20inch(508mm) lengths of flexible cord is required,and each cord approximately 12 inches(305mm) from the point of rotation to the weight,see fig 94.1
<table>
<tr><th>Cord type (mm²)</th><th>Load weight (g)</th><th>Angle (°)</th><th>Frequency (turns)</th><th>Flexing no. for connector (turms)</th><th>Flexing No.for plug</th></tr>
<tr><td>other</td><td>10N(1020g)</td><td>45°</td><td>60r/min</td><td>10000</td><td>10000</td></tr>
<tr><td>>0.75</td><td>20N(2040g)</td><td>45°</td><td>60r/min</td><td>10000</td><td>10000</td></tr>
</table>
A sample shall be secured to the flexing apparatus as below:
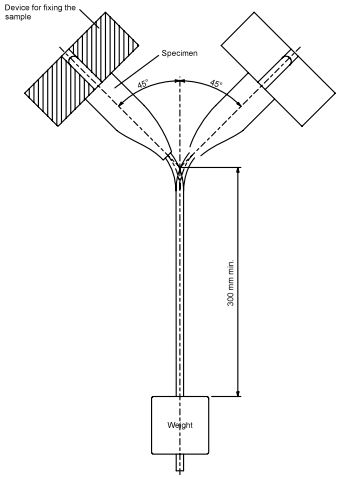

</td>
<td>After the test the sample
shall be no damage or breakage</td>
</tr>
</table>

Confidential Proprietary

<table>
<tr><th>No.</th><th>Items項目</th><th>Conditions for Test測試條件</th><th>Specification判定規格</th></tr>
<tr><td>8</td><td>Heat Pressure Test
球壓測試
(IEC884 C25.2 OR IEC320 C24.1)</td><td>A ball pressure test is made in a heating cabinet at a temperature of 125±2℃ and applied a steel ball of 5mm diameter against this sample surface with a force of 20N.after 1 hour,the tested ample
is cooled down within 10 seconds.see as following fig.:
 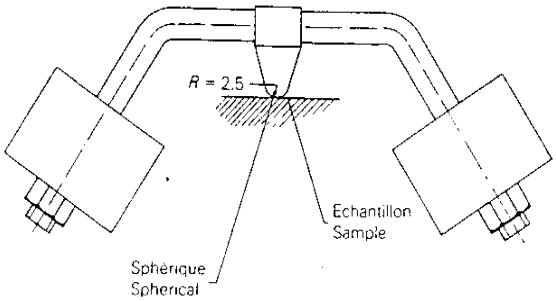
</td><td>the diameter of the impression caused by the ball shall not exceed 2 mm</td></tr>
<tr><td>9</td><td>Anchorage Test
錨錠測試
(IEC884 C23.2 OR IEC320 C22.3)</td><td>A sample is placed in the test apparatus(as below) so that the axis of the flexible cable is vertical where it enters the sample.The flexible cable is then subjected to show in the table:
<table><tr><th>Rating</th><th>Pull</th></tr><tr><td>I<=2.5A</td><td>50</td></tr><tr><td>2.5A<I<16A U<250V</td><td>60</td></tr><tr><td>I<16A U>250V</td><td>80</td></tr><tr><td>I>16A</td><td>100</td></tr></table>
Immediately afterwards, the flexible cable is subjected for
<table><tr><th rowspan="2">Rating of plug or portable socket-outlet</th><th colspan="5">Flexible cable (number of cores x cross-section in mm²)</th></tr><tr><th>2 x 0,5</th><th>2 x 0,75</th><th>3 x 0,5</th><th>3 x 0,75</th><th>(2 or more) x 1</th></tr><tr><td>Up to and including 16 A and 250 V</td><td>0,1 Nm</td><td>0,15 Nm</td><td>0,15 Nm</td><td>0,25 Nm</td><td>0,25 Nm</td></tr><tr><td>16A and above 250 V</td><td>-</td><td>-</td><td>-</td><td>-</td><td>0,35 Nm</td></tr><tr><td>Above 16 A</td><td>-</td><td>-</td><td>-</td><td>-</td><td>0,425 Nm</td></tr></table>
 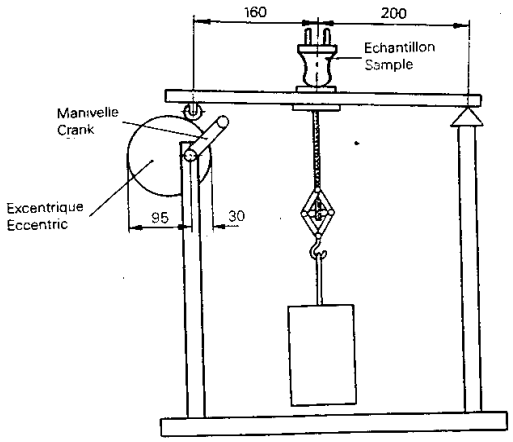
</td><td>After the test,the flexible shall not have been displaced by more than 2mm,or no break.</td></tr>
</table>

No.	Items項目	Conditions for Test測試條件	Specification判定規格
10	Breaking Capacity 分斷容量 (IEC320 C19)	The connector and appliance inlet are connected and disconnected 50 times (100 strokes) at a rate of 30 strokes per minute.the length of a stroke of the test apparatus is between 50mm and 60mm, The periods during which the test current is passed from the connection to the subsequent disconnection of the accessories are 1.5(+0.5,-0)s,The test voltage is 275V,the test current is 1.25 times rated current and the power factor is at least 0.95 for 10A and 16A connectors and 0.6±0.05 for other connectors. 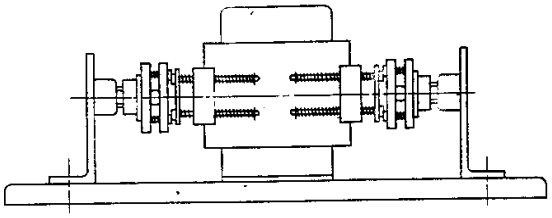 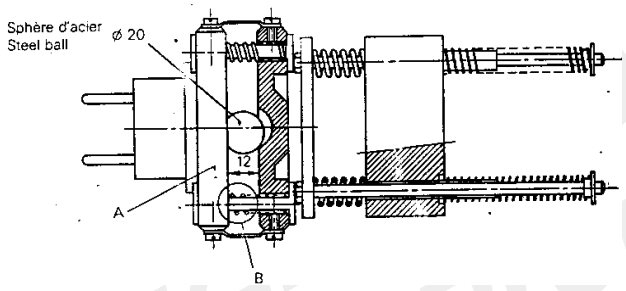	The specimen shall show no damage impairing its further use and the entry holes for the pin shall not show any serious damage
11	Tumbling Barrel Test 滾桶測試 (IEC884 C24.2)	A sample is tested by 10 falls per minute in a tumbling barrel as shown below. The flexible cable shall be cut for a free length of about 100mm from the accessory. The number of falls shown in the table; Weight / Numbers <100g / 1000 >100g / 500 >200g / 100 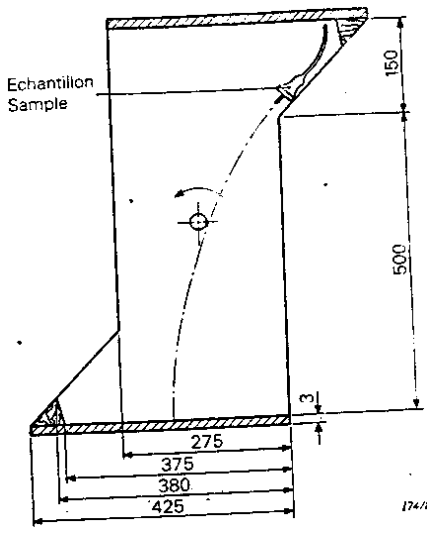	After the test,no part detached or loosened,the pin shall not turn when a torque of 0.4Nm is applied,first in one direction for 1 min and then in the opposite direction for 1 min.

KUNG Confidential Pro-prietary

No.	Items項目	Conditions for Test測試條件	Specification判定規格
12	Low Temperature Impact 低溫撞擊測試 (IEC884 C24.4)	The specimen is subjected to an impact test by mean of an apparatus shown in below.At a temperature of -15±2℃ for at least 16h.The falling weight of 1000±2g is allowed to fall from a height of 100 mm. 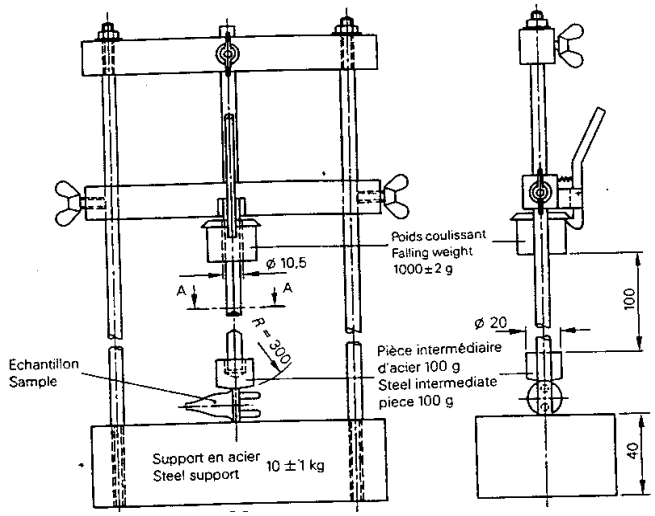 	No damage within the meaning of the standard
13	Resistance to Aging 老化試驗 (IEC884 C16.1)	The temperature in the cabinet is 70±2℃.The specimen is kept in the cabinet for 7 days (168h). After the treatment, the specimen is kept at a room temperature and relative humidity between 45%-55% for least 4 days (96h).after,the specimen shall show no crack visible with normal or corrected vision. A forefinger wrapped in a dry piece of rough cloth is pressed on the specimen with a force of 5N. No traces of the cloth shall remain on the specimen and the	After the test,the specimen shll show no damage which would lead to non-compliance with the standard
14	Compression Test 壓迫試驗 (IEC884 C24.5)	A specimen is pressed between two flat surfaces with a force of 150N for 5 min,as shown in fig. After 15 min,remove from the test apparatus and check it.A specimen is subjected to a compression test in the nanner as shown in below,the temperature of the pressure plate :23±2℃. Applied force :300N The specimen is placed in each position as shown in fig. for 1 min and shall be checked,15 min after the removal from the test apparatus. 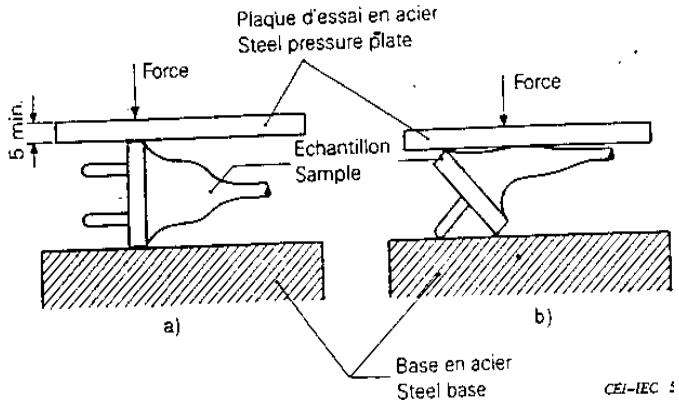 	No damage within the meaning of the standard

Confidential Proprietary

Kitemark™ Certificate

This is to certify that:

King-Cord Co., Ltd. (Shenzhen)
1F,3F and North West of 2F, No. B2
The West Industry Park of Tantou
Songgang Town, Baoan District
Shenzhen
Guangdong
518105
China

Holds Certificate Number: KM 41231

In respect of:

BS 1363 Parts 1-5
Plugs, Socket-outlets, Adaptors and Fused Connection units.

This issues the right and licence to use the Kitemark in accordance with the Kitemark Terms and Conditions governing the use of the Kitemark, as may be updated from time to time by BSI Assurance UK Ltd (the "Conditions"). All defined terms in this Certificate shall have the same meaning as in the Conditions.

The use of the Kitemark is authorized in respect of the Product(s) detailed on this Certificate provided at or from the above address.

For and on behalf of BSI:

Shahm Barhom, Group Product Certification Director

First Issued: 1999-02-25
Latest Issue: 2022-09-14

Effective Date: 2022-09-14
Expiry Date: 2025-05-28

This certificate has been issued by and remains the property of BSI Assurance UK Ltd, Kitemark Court, Davy Avenue, Knowlhill, Milton Keynes MK5 8PP, United Kingdom and should be returned immediately upon request.
To check its validity telephone +44 (0) 345 080 9000. An electronic certificate can be authenticated online.

BSI Assurance UK Limited, registered in England under number 7805321 at 389 Chiswick High Road, London W4 4AL, UK.
A member of BSI Group of Companies.

Kitemark™ Certificate

No. KM 41231

The affixing of the Kitemark and the words 'Approved by BSI Lic No KM 41231' signify that the 13 A plugs detailed within this Kitemark Licence are approved by BSI within the meaning of the Statutory Instrument No 1768 1994 being the 'The Plug and Socket etc. (Safety) Regulations 1994'.

Approval remains in force concurrent with the expiration date of this Kitemark licence.

It is a condition of approval that the Licensee maintains strict compliance with the requirements of both the Plug and Socket etc. (Safety) Regulations 1994 and the Kitemark Licence Conditions of Contract

-------//-------

Group 1 - Non-rewireable 13 A Plugs to BS 1363-1:2016 + A1:2018

Type	Rating	Colour	Test Report Number
KC-036	250 V Rough use	Black, Grey or Clear	241/000076, 241/000286, 241/005135, 241/4092962, 241/4162116, 241/4172825, 241/4222210, 241/4261383, 241/4349941, 8250995 and 8586712.
The plug type KC-036 incorporates the GEM terminal plug bridge P/N M98051A-1			

Cord Fitted

The following cord is satisfactory for incorporation with the variants of Group 1 and is subject to the continuing validity of its approval.

Standard	Size (mm^2)	Code	Manufacturer	Approval	Rating
EN 50525-2-11	2 x 0.75	H03VVH2-F	I-Sheng	VDE 40006070	6 A
EN 50525-2-11	2 x 0.75	H05VVH2-F	I-Sheng	VDE 40006070	6 A
EN 50525-2-11	3 x 0.75	H05VV-F	I-Sheng	VDE 40006070	6 A
EN 50525-2-11	2 x 0.75	H05VV-F	I-Sheng	VDE 40006070	6 A
EN 50525-2-11	3 x 1	H05VV-F	I-Sheng	VDE 40006070	10 A
EN 50525-2-11	3 x 1.5	H05VV-F	I-Sheng	VDE 40006070	13 A
EN 50525-2-11	2 x 0.75	H03VV-F	Shenzhen Baohing	VDE 103727	6 A
EN 50525-2-11	3 x 0.75	H03VV-F	Shenzhen Baohing	VDE 103727	6 A
EN 50525-2-11	2 x 0.75	H05VV-F	Shenzhen Baohing	VDE 103727	6 A
EN 50525-2-11	3 x 0.75	H05VV-F	Shenzhen Baohing	VDE 103727	6 A
EN 50525-2-11	3 x 1	H05VV-F	Shenzhen Baohing	VDE 103727	10 A
EN 50525-2-11	2 x 0.75	H03VVH2-F	Shenzhen Baohing	VDE 103727	6 A
EN 50525-2-11	2 x 0.75	H05VVH2-F	Shenzhen Baohing	VDE 103727	6 A
EN 50525-2-11	3 x 1.5	H05VV-F	Shenzhen Baohing	VDE 103727	13 A

First Issued: 1999-02-25
Latest Issue: 2022-09-14

Effective Date: 2022-09-14
Expiry Date: 2025-05-28

This certificate has been issued by and remains the property of BSI Assurance UK Ltd, Kitemark Court, Davy Avenue, Knowlhill, Milton Keynes MK5 8PP, United Kingdom and should be returned immediately upon request.
To check its validity telephone +44 (0) 345 080 9000. An electronic certificate can be authenticated online.

BSI Assurance UK Limited, registered in England under number 7805321 at 389 Chiswick High Road, London W4 4AL, UK.
A member of BSI Group of Companies.

Kitemark™ Certificate

No. KM 41231

Group 1 - Continued

Cord Fitted

The following cord is satisfactory for incorporation with the variants of Group 1 and is subject to the continuing validity of its approval.

Standard	Size (mm^2)	Code	Manufacturer	Approval	Rating
EN 50525-2-11	2 x 0.75	H03VVH2-F	KING-CORD	VDE 40042910	6 A
EN 50525-2-11	2 x 0.75	H05VVH2-F	KING-CORD	VDE 40042910	6 A
EN 50525-2-11	3 x 0.75	H05VV-F	KING-CORD	VDE 40042910	6 A
EN 50525-2-11	2 x 0.75	H05VV-F	KING-CORD	VDE 40042910	6 A
EN 50525-2-11	3 x 1	H05VV-F	KING-CORD	VDE 40042910	10 A
EN 50525-2-11	3 x 1.5	H05VV-F	KING-CORD	VDE 40042910	13 A
EN 50525-2-11	2 x 0.75	H03VV-F	KING-CORD	VDE 40042910	6 A
EN 50525-2-11	3 x 0.75	H03VV-F	KING-CORD	VDE 40042910	6 A

First Issued: 1999-02-25
Latest Issue: 2022-09-14

Effective Date: 2022-09-14
Expiry Date: 2025-05-28

This certificate has been issued by and remains the property of BSI Assurance UK Ltd, Kitemark Court, Davy Avenue, Knowlhill, Milton Keynes MK5 8PP, United Kingdom and should be returned immediately upon request.
To check its validity telephone +44 (0) 345 080 9000. An electronic certificate can be authenticated online.

BSI Assurance UK Limited, registered in England under number 7805321 at 389 Chiswick High Road, London W4 4AL, UK.
A member of BSI Group of Companies.

Kitemark™ Certificate

No. KM 41231

Group 2 - Non-rewireable 13 A Plugs to BS 1363-1:2016 + A1:2018

Type	Rating	Colour	Test Report Number
KC-039	250V Rough use	Black, Grey or Clear	241/4785592, 7855676, 7984124 & 8250995, 8586712 and 3055464.
The plug type KC-039 incorporates the GEM terminal plug bridge P/N M87053 or Taller terminal plug bridge P/N B10.062-B			

Cord Fitted

The following cord is satisfactory for incorporation with the variants of Group 2 and is subject to the continuing validity of its approval.

Standard	Size (mm^2)	Code	Manufacturer	Approval	Rating
EN 50525-2-11	3 x 1	H05VV-F	I-Sheng	VDE 40006070	10 A
EN 50525-2-11	3 x 0.75	H05VV-F	I-Sheng	VDE 40006070	6 A
EN 50525-2-11	2 x 0.75	H03VV-F	I-Sheng	VDE 40006070	6 A
EN 50525-2-11	2 x 0.75	H05VVH2-F	I-Sheng	VDE 40006070	6 A
EN 50525-2-11	3 x 0.75	H03VV-F	I-Sheng	VDE 40006070	6 A
EN 50525-2-11	2 x 0.75	H03VVH2-F	I-Sheng	VDE 40006070	6 A
EN 50525-2-11	2 x 0.75	H05VV-F	I-Sheng	VDE 40006070	6 A
EN 50525-2-11	3 x 1	H05VV-F	Shenzhen Baohing	VDE 103727	10 A
EN 50525-2-11	3 x 0.75	H05VV-F	Shenzhen Baohing	VDE 103727	6 A
EN 50525-2-11	2 x 0.75	H03VV-F	Shenzhen Baohing	VDE 103727	6 A
EN 50525-2-11	2 x 0.75	H05VVH2-F	Shenzhen Baohing	VDE 103727	6 A
EN 50525-2-11	3 x 0.75	H03VV-F	Shenzhen Baohing	VDE 103727	6 A
EN 50525-2-11	2 x 0.75	H03VVH2-F	Shenzhen Baohing	VDE 103727	6 A
EN 50525-2-11	2 x 0.75	H05VV-F	Shenzhen Baohing	VDE 103727	6 A
EN 50525-2-21	3 x 1	H05RR-F	I-Sheng	VDE 40014085	10 A
EN 50525-2-21	3 x 0.75	H05RR-F	I-Sheng	VDE 40014085	10 A* / 6 A
EN 50525-2-21	3 x 1	H05RR-F	Lucky United E	VDE 40016757	10 A
EN 50525-2-21	3 x 0.75	H05RR-F	Lucky United E	VDE 40016757	10 A* / 6 A
*For cord lengths less than 2 metres.					

First Issued: 1999-02-25
Latest Issue: 2022-09-14

Effective Date: 2022-09-14
Expiry Date: 2025-05-28

This certificate has been issued by and remains the property of BSI Assurance UK Ltd, Kitemark Court, Davy Avenue, Knowlhill, Milton Keynes MK5 8PP, United Kingdom and should be returned immediately upon request.
To check its validity telephone +44 (0) 345 080 9000. An electronic certificate can be authenticated online.

BSI Assurance UK Limited, registered in England under number 7805321 at 389 Chiswick High Road, London W4 4AL, UK.
A member of BSI Group of Companies.

Kitemark™ Certificate

No. KM 41231

Group 2 - Continued

Cord Fitted
The following cord is satisfactory for incorporation with the variants of Group 2 and is subject to the continuing validity of its approval.

Standard	Size (mm^2)	Code	Manufacturer	Approval	Rating
EN 50525-2-11	2 x 0.75	H03VVH2-F	KING-CORD	VDE 40042910	6 A
EN 50525-2-11	2 x 0.75	H05VVH2-F	KING-CORD	VDE 40042910	6 A
EN 50525-2-11	3 x 0.75	H05VV-F	KING-CORD	VDE 40042910	6 A
EN 50525-2-11	2 x 0.75	H05VV-F	KING-CORD	VDE 40042910	6 A
EN 50525-2-11	3 x 1	H05VV-F	KING-CORD	VDE 40042910	10 A
EN 50525-2-11	2 x 0.75	H03VV-F	KING-CORD	VDE 40042910	6 A
EN 50525-2-11	3 x 0.75	H03VV-F	KING-CORD	VDE 40042910	6 A
EN 50525-2-11	3 x 1.5	H05VV-F	KING-CORD	VDE 40042910	13 A

First Issued: 1999-02-25
Latest Issue: 2022-09-14

Effective Date: 2022-09-14
Expiry Date: 2025-05-28

This certificate has been issued by and remains the property of BSI Assurance UK Ltd, Kitemark Court, Davy Avenue, Knowlhill, Milton Keynes MK5 8PP, United Kingdom and should be returned immediately upon request.
To check its validity telephone +44 (0) 345 080 9000. An electronic certificate can be authenticated online.

BSI Assurance UK Limited, registered in England under number 7805321 at 389 Chiswick High Road, London W4 4AL, UK.
A member of BSI Group of Companies.

Kitemark™ Certificate

No. KM 41231

Group 3 - Non-rewireable 13 A Plugs with ISOD to BS 1363-1:2016 + A1:2018

Type	Rating	Colour	Test Report Number
KC-039A	250V Rough use	Black	8443116 and 3055464.
The plug type KC-039A incorporates the GEM terminal plug bridge P/N M87054 or Taller terminal plug bridge P/N B10.062-A			

Cord Fitted

The following cord is satisfactory for incorporation with the variants of Group 2 and is subject to the continuing validity of its approval.

Standard	Size (mm^2)	Code	Manufacturer	Approval	Rating
EN 50525-2-11	2 x 0.75	H03VVH2-F	I-Sheng	VDE 40006070	10 A* / 6 A
EN 50525-2-11	2 x 0.75	H03VVH2-F	KING-CORD	VDE 40042910	6 A
EN 50525-2-11	2 x 0.75	H05VVH2-F	KING-CORD	VDE 40042910	6 A
EN 50525-2-11	2 x 0.75	H05VV-F	KING-CORD	VDE 40042910	6 A
EN 50525-2-11	2 x 0.75	H03VV-F	KING-CORD	VDE 40042910	6 A
EN 50525-2-11	3 x 0.75	H03VV-F	KING-CORD	VDE 40042910	6 A
*For cord lengths less than 2 metres.					

The non-rewireable plugs listed on this Kitemark Licence may be fitted with the following BS 1362 fuse links.

Manufacturer	Model number / ratings	Certification
Taller GmbH	ATLAS 3 A, 5 A, 10 A and 13 A	KM 70570 and ASTA No 767
AsiaFuse (HK) Electronics Ltd	AF63B 3 A, 5 A, 7 A, 10 A and 13 A	ASTA No 974

First Issued: 1999-02-25
Latest Issue: 2022-09-14

Effective Date: 2022-09-14
Expiry Date: 2025-05-28

This certificate has been issued by and remains the property of BSI Assurance UK Ltd, Kitemark Court, Davy Avenue, Knowlhill, Milton Keynes MK5 8PP, United Kingdom and should be returned immediately upon request.
To check its validity telephone +44 (0) 345 080 9000. An electronic certificate can be authenticated online.

BSI Assurance UK Limited, registered in England under number 7805321 at 389 Chiswick High Road, London W4 4AL, UK.
A member of BSI Group of Companies.

ZEICHENGENEHMIGUNG
MARKS APPROVAL

King Cord Co., Ltd.
8F-3 No. 124 Sianjheng 3rd. Rd.
302 Jhubei City, Hsinchu Country
Taiwan

ist berechtigt, für ihr Produkt /
is authorized to use for their product

Gerätesteckdose, nicht-wiederanschließbar
Connector, non-rewirable

die hier abgebildeten markenrechtlich geschützten Zeichen
für die ab Blatt 2 aufgeführten Typen zu benutzen /
the legally protected Marks as shown below for the types referred to on page 2 ff.

Geprüft und zertifiziert nach /
Tested and certified according to

DIN EN IEC 60320-1 (VDE 0625-1):2023-06; EN IEC 60320-1:2021

Das Produkt erfüllt auch die Anforderungen nach /
The product also fulfills the requirements of

IEC 60320-1:2021

Aktenzeichen: 1384300-1550-0012 / 311571
File ref.:

VDE Prüf- und Zertifizierungsinstitut GmbH
VDE Testing and Certification Institute
Zertifizierungsstelle / *Certification*

Ausweis-Nr. 40014553 Blatt 1
Certificate No. *Page*

Weitere Bedingungen siehe Rückseite und Folgeblätter /
further conditions see overleaf and following pages

Offenbach, 2005-07-05
(letzte Änderung / updated 2024-06-26)

M. Tasotti

VDE Prüf- und Zertifizierungsinstitut
Zeichengenehmigung

Name und Sitz des Genehmigungs-Inhabers / *Name and registered seat of the Certificate holder*
King Cord Co., Ltd., 8F-3 No. 124 Sianjheng 3rd. Rd., 302 JHUBEI CITY, HSINCHU COUNTRY, TAIWAN

Aktenzeichen / *File ref.*
1384300-1550-0012 / 311571 / TL3 / E

letzte Änderung / *updated*
2024-06-26

Datum / *Date*
2005-07-05

Dieses Blatt gilt nur in Verbindung mit Blatt 1 des Zeichengenehmigungsausweises Nr. 40014553.
This supplement is only valid in conjunction with page 1 of the Certificate No. 40014553.

Gerätesteckdose, nicht-wiederanschließbar
Connector, non-rewirable

Typ(en) / *Type(s)*

1 KC-003

2 KC-003R

Bemessungsspannung *Rated voltage*	AC 250 V
Bemessungsstrom *Rated current*	10 A
Polzahl *Number of poles*	2-polig mit Schutzkontakt *2-pole with earthing contact*
Bauart *Kind of construction*	Normblatt C13 *standard sheet C13*
Ausführung(en) *Construction(s)*	zentrale Leitungseinführung *straight cable entry* Für / *for* 1 abgewinkelte Leitungseinführung *angled cable entry* Für / *for* 2
Produktinformation *Product information*	siehe Anlage Nr. 300 + 700 + 900 vom 2024-06-26 *see Appendix No. 300 + 700 + 900 dated 2024-06-26*

KING CORD
Confidential Proprietary

VDE Prüf- und Zertifizierungsinstitut
Zeichengenehmigung

Ausweis-Nr. / *Certificate No.*
40014553

Beiblatt / *Supplement*

Name und Sitz des Genehmigungs-Inhabers / *Name and registered seat of the Certificate holder*
King Cord Co., Ltd., 8F-3 No. 124 Sianjheng 3rd. Rd., 302 JHUBEI CITY, HSINCHU COUNTRY, TAIWAN

Aktenzeichen / *File ref.*
1384300-1550-0012 / 311571 / TL3 / E

letzte Änderung / *updated*
2024-06-26

Datum / *Date*
2005-07-05

Dieses Beiblatt ist Bestandteil des Zeichengenehmigungsausweises Nr. 40014553.
This supplement is part of the Certificate No. 40014553.

Gerätesteckdose, nicht-wiederanschließbar
Connector, non-rewirable

Fertigungsstätte(n)
Place(s) of manufacture

Referenz/*Reference*	
30013100	King-Cord Electronics (Shenzhen) Co., Ltd. No. B2 The West Industry Park of TanTou, Song Gang Town 518105 BAO-AN DISTRICT, SHENZHEN CITY Guangdong CHINA

KING-CORD
Confidential Proprietary

VDE Prüf- und Zertifizierungsinstitut
Zeichengenehmigung

Ausweis-Nr. / *Certificate No.* 40014553

Infoblatt / *Info sheet*

Name und Sitz des Genehmigungs-Inhabers / *Name and registered seat of the Certificate holder*
King Cord Co., Ltd., 8F-3 No. 124 Sianjheng 3rd. Rd., 302 JHUBEI CITY, HSINCHU COUNTRY, TAIWAN

Aktenzeichen / *File ref.*
1384300-1550-0012 / 311571 / TL3 / E

letzte Änderung / *updated*
2024-06-26

Datum / *Date*
2005-07-05

Dieses Blatt gilt nur in Verbindung mit Blatt 1 des Zeichengenehmigungsausweises Nr. 40014553.
This supplement is only valid in conjunction with page 1 of the Certificate No. 40014553.

Genehmigung zum Benutzen des auf Seite 1 abgebildeten markenrechtlich geschützten Zeichens des VDE:

Grundlage für die Benutzung sind die Allgemeinen Geschäftsbedingungen (AGB) der VDE Prüf- und Zertifizierungsinstitut GmbH (www.vde.com\AGB-Institut). Das Recht zur Benutzung erstreckt sich nur auf die bezeichnete Firma mit den genannten Fertigungsstätten und die oben aufgeführten Produkte mit den zugeordneten Bezeichnungen. Die Fertigungsstätte muss so eingerichtet sein, dass eine gleichmäßige Herstellung der geprüften und zertifizierten Ausführung gewährleistet ist.
Die Genehmigung ist so lange gültig wie die VDE Bestimmungen gelten, die der Zertifizierung zugrunde gelegen haben, sofern sie nicht auf Grund anderer Bedingungen aus der VDE Prüf- und Zertifizierungsordnung (PM102) zurückgezogen werden muss.
Der Gültigkeitszeitraum einer VDE GS-Zeichengenehmigung kann auf Antrag verlängert werden. Bei gesetzlichen und / oder normativen Änderungen kann die VDE GS-Zeichengenehmigung ihre Gültigkeit zu einem früheren als dem angegebenen Datum verlieren.
Produkte, die das Biozid Dimethylfumarat (DMF) enthalten, dürfen gemäß der Kommissionsentscheidung 2009/251/EG nicht mehr in den Verkehr gebracht oder auf dem Markt bereitgestellt werden.
Der VDE Zeichengenehmigungsausweis wird ausschließlich auf der ersten Seite unterzeichnet.

Approval to use the legally protected Mark of the VDE as shown on the first page:
Basis for the use are the general terms and conditions of the VDE Testing and Certification Institute (www.vde.com\terms-institute). The right to use the mark is granted only to the mentioned company with the named places of manufacture and the listed products with the related type references. The place of manufacture shall be equipped in a way that a constant manufacturing of the certified construction is assured.
The approval is valid as long as the VDE specifications are in force, on which the certification is based on, unless it is withdrawn according to the VDE Testing and Certification Procedure (PM102E).
The validity period of a VDE GS-Mark Approval may be prolonged on request. In case of changes in legal and / or normative requirements, the validity period of a VDE GS-Mark Approval may be shortened.
Products containing the biocide dimethylfumarate (DMF) may not be marketed or made available on the EC market according to the Commission Decision 2009/251/EC.
The approval is solely signed on the first page.

KING CORD Industrial Proprietary

LICENCE

APPAREILLAGE ELECTRIQUE DOMESTIQUE

LCIE N° : NF012_4168

Titulaire : *License Holder:*	**KING CORD CO., LTD** N° 52-5 Siasihhu Shanghu Village, Yangmei Township TAOYUAN COUNTY 326, Taïwan - Chine
Site de fabrication : *Factory:*	**KING-CORD ELECTRONICS (SHENZHEN) Co., Ltd** (N°1562AP) No. B2, The West Industry Park, of Tantou, Song Gang Town, Bao'An District, 518105, Shenzhen, Guangdong - Chine
Produit : *Product:*	**Prise mobile** *Connector*
Marque commerciale (s'il y a lieu) : *Trade mark (if any):*	KING-CORD
Modèle, type, référence : *Model, type, reference:*	KC-003, KC-003R
Caractéristiques principales : *Main characteristics*:	Voir Annexe / *See Annex*
Informations complémentaires : *Additional information*:	*/*
Le produit est conforme à : *The product is in conformity with*:	EN IEC 60320-1:2021
Documents pris en compte : *Relevant documents*:	Rapport(s) d'essai(s) / *Test report(s)* n°KCG-ESH-P23091167
Annule et remplace (s'il y a lieu) : *Cancels and replaces (if necessary)*:	/

En vertu de la présente décision notifiée par le LCIE organisme mandaté, AFNOR Certification accorde le droit d'usage de la Marque NF à la société qui en est titulaire pour les produits visés ci-dessus, dans les conditions définies par les règles générales de la Marque NF et par les règles de certification NF, pour autant que les contrôles réguliers de la fabrication et les vérifications par tierce partie soient satisfaisants.

On the strength of the present decision notified by LCIE mandated certification body, AFNOR Certification grants the right to use the NF Mark to the licence holder for the above mentioned products, within the frame of the general rules of the NF Mark and of the NF certification rules, as far as the regular checking and third party verifications of the production are satisfactory.

Fontenay-aux-Roses, 27/11/2023

Date de fin de validité / *Expiry date* :
La validité de la présente licence cesse dès l'annulation de l'une des normes sur lesquelles elle est fondée.
The present license is valid until the cancellation of one of the standards on which it is based.

LABORATOIRE CENTRAL DES INDUSTRIES ELECTRIQUES
S.A.S au capital de 15.745.984 €
RCS Nanterre B 408 363 174
33 avenue du Général Leclerc
F - 92266 FONTENAY AUX ROSES

Julien GAUTHIER
Responsable Certification/Certification Officer

KING-CORD Confidential Proprietary

Accréditation N° 5-0014 Portée disponible sur www.cofrac.fr
cofrac CERTIFICATION DE PRODUITS ET SERVICES

LCIE
Laboratoire Central des Industries Electriques
Une société de Bureau Veritas

33 Avenue du Général Leclerc
92260 Fontenay-aux-Roses
FRANCE

WWW.LCIE.FR

RÉFÉRENCES - CARACTÉRISTIQUES PRINCIPALES
REFERENCES - MAIN CHARACTERISTICS

Feuille de norme / *Standard Sheet*	C13
Courant nominal / *Rated current* (A) Tension nominale / *Rated voltage* (V)	10A 250 V~
Degré de protection *Degree of protection*	IP20
Type d'équipement à raccorder *Type of equipment to be connected*	Connecteurs pour équipements de Classe I - *Connectors for class I equipment*
Procédé de raccordement du câble *Method of connecting the cable*	non démontable - *non-rewirable*
Couleur *Colour*	Toutes couleurs - *Any colours*
Entrée de câble *Entry of cable*	longitudinale - *longitudinal (KC-003)* latérale - *lateral (KC-003R)*

Composants ***Components***	**Modèle** ***Model***	**Fabricant** ***Manufacturer***	**Conformité** ***Conformity***	**Validité** ***Validity***
Câble / *Cable*	H05VV-F 3G0,75/1,0/1,5mm^2	I-Sheng Electric Wire & Cable Co., Ltd. King Cord Co., Ltd.	VDE	-

KING-CORD
Confidential Proprietary

LCIE
Laboratoire Central des Industries Electriques
Une société de Bureau Veritas
33 Avenue du Général Leclerc
92260 Fontenay-aux-Roses
FRANCE
WWW.LCIE.FR

CERTIFICATE

Issued to:
Applicant:
King-Cord Co., Ltd.
8F-3 No. 124 Sianjheng 3rd. Rd.,
302 Jhubei City, Hsinchu County, Taiwan

Licensee:
King-Cord Co., Ltd.
8F-3 No. 124 Sianjheng 3rd. Rd.,
302 Jhubei City, Hsinchu County, Taiwan

Product	:	Connector, 2-pole, with earthing
Trade name(s)	:	KING-CORD
Type(s)/model(s)	:	KC-003

The product and any acceptable variation thereto as specified in the Annex to this certificate and the documents therein referred to.

DEKRA hereby declares that the above-mentioned product has been certified on the basis of:
- a type test according to EN IEC 60320-1:2021
- an inspection of the factory location according to CENELEC Operational Document CIG 021
- a DEKRA certification agreement with the number 916475

DEKRA hereby grants the right to use the KEMA-KEUR certification mark.

The KEMA-KEUR certification mark may be applied to the product as specified in this certificate for the duration and under the conditions of the KEMA-KEUR certification agreement.

This certificate is issued on 18 July 2023 and expires upon withdrawal of one of the above mentioned standards.

Certificate number: 35-129728

DEKRA Certification B.V.

B.T.M. Holtus
Managing Director

K. Lin
Certification Manager

© Integral publication of this certificate is allowed

ACCREDITED BY THE
DUTCH ACCREDITATION
COUNCIL

PRODUCTS
RvA C 001

KEMA KEUR

SPECIFICATION OF THE CERTIFIED PRODUCT

Product data

Product	:	Connector, 2-pole, with earthing
Trade name(s)	:	KING-CORD
Type(s)/model(s)	:	KC-003
Rated current	:	10 A
Rated voltage	:	250 V~
Overvoltage category	:	II
Pollution degree	:	2
Rated impulse voltage	:	2500V
Material group	:	III
Standard sheet	:	C13
Temperature limit	:	T70
Applied flexible cords	:	H05VV-F 3G0,75/1,0/1,5 mm²
Certification mark	:	complies with the requirements
Cord termination	:	crimped connection
Description	:	straight type, body of thermoplastic material as part of a cord set or an interconnection cord set for class I appliances

TESTS

Test requirements
EN IEC 60320-1:2021

Test result
The test results are laid down in DEKRA test file 490444600.

Additional information
The list of components is laid down in test report 4904446.50.

Conclusion
The examination proved that all requirements were met.

Factory location
King-Cord Electronics (Shenzhen) Co., Ltd.
No. B2, The West Industry Park of Tan Tou, Song Gang Town, Bao An District,
518105 Shenzhen City Guangdong, China

KING-CORD Confidential Proprietary

LICENCE

No. 12168 - Issue No 2

Issued to:
Applicant:
King-Cord Co., Ltd.
No. 52-5 Siasihhu Shanghu Village
Yangmei Township
326 TAOYUAN COUNTY
Taiwan

Licensee:
King-Cord Co., Ltd.
No. 52-5 Siasihhu Shanghu Village
Yangmei Township
326 TAOYUAN COUNTY
Taiwan

Product	:	connectors (2-pole) for class I appliances
Trade name(s)	:	KING-CORD
Type(s)/model(s)	:	KC-003, KC-003R

The product and any acceptable variation thereto is specified in the annex to this licence and the documents therein referred to.

SGS CEBEC hereby declares that the above-mentioned product has been certified on the basis of:
- a type test according to the standard specified in annex
- an inspection of the production location according to CCA Group Operational Document CIG 021
- a certification agreement with the number 907

SGS CEBEC hereby grants the right to use the CEBEC certification mark

The CEBEC certification mark may be applied to the product as specified in this licence for the duration of the CEBEC certification agreement and under the conditions of the CEBEC certification agreement.

This licence is issued on: 14/01/2005

ir. R. Maquestiau,
Certification Manager

© Only integral publication of this certificate, including the annex, is allowed

SGS Belgium N.V. - CEBEC
Avenue F. Van Kalkenlaan, 9A/b.1
B-1070 Bruxelles/Brussel
T: +32 [0]2 556 00 20
F: +32 [0]2 556 00 36

Accredited by BELCERT 055 PR

SPECIFICATION OF THE CERTIFIED PRODUCT

Product data

Product	:	connectors (2-pole) for class I appliances
Trade name(s)	:	KING-CORD
Type(s)/Model(s)	:	KC-003, KC-003R
rated current (In)	:	10 A
rated voltage (Un)	:	250 V~
class	:	for class I appliances
earthing	:	with earthing contact
temperature limit (t max)	:	T70
standard sheet	:	C13
design	:	non-rewirable
applied flexible cord(s)	:	H05 VV-F 3G0.75-1-1.5 mm²
certification mark	:	CEBEC certified
cord(s) termination	:	crimped connection
colour(s)	:	all colours + transparent
description	:	body of thermoplastic material
markings	:	on the body

Product data - type KC-003

design	:	axial cable entry

Product data - type KC-003R

design	:	lateral cable entry

TESTS

Test requirements

NBN EN 60320-1 based on EN 60320-1:1996 + A1:1996 + A2:1998

Test results

The test results are laid down in certification file ref.574533/01

Remarks

This certificate is based on certificate ref. CB NO 10433 and test report(s) ref. 200032176

Conclusion

The examination proved that all test requirements were met.

Checked by, project leader	:	Jean-Pierre Brecht 2005-01-19
Department Manager, Product Certification	:	2005-01-20
Certification Manager	:	2005-01-20

FACTORY LOCATION(S)

King-Cord Co., Ltd
No. B2 The West Industry Park of Tan Tou
Song Gang Town, Bao'An District
ShenZhen City, GUANGDONG
China

OVE Austrian Electrotechnical Association
Eschenbachgasse 9 | 1010 Wien | Austria
ZVR: 327279890 | www.ove.at

OVE Certification
Kahlenberger Str. 2A | 1190 Wien | Austria
T +43 1 370 58 06 | certification@ove.at

Validity of ÖVE-Certificates can be checked at www.ove.at

ÖVE-CERTIFICATE

including the entitlement to use the Austrian Safety Mark

Certificate No.: **20833-008-11**

Valid from: 2023 06 18
until: 2025 06 18

The Austrian Electrotechnical Association (OVE) hereby grants the right to the company mentioned below to label the listed products with the Austrian Safety Mark.

Company: **King-Cord Co. Ltd.**
No. 52-5 Siasihhu Shanghu Village,
Yangmei Township
Taoyuan County 326
Taiwan

Product: **Connector for Class I appliances with cord**

The products submitted by the applicant were type tested in accordance with the requirements of the technical standards and specifications listed in this certificate. OVE certifies the conformity of the listed products and those products manufactured strictly identical to the submitted ones (EN ISO/IEC 17067, Conformity Assessment Scheme Type 5).

The manufacturing process and the products are subject to ongoing surveillance based on harmonized European procedures. This certificate has been issued under the presumption and conditional on the fact that the applicant holds all necessary legal rights with regard to the product, presented for the testing and certification.

Results of testing are shown in file No(s).: **1355-944/01**

King-Cord
Confidential Proprietary

Österreichischer Verband für Elektrotechnik
Head of OVE Certification

Digitally signed by T. Neumayer
Email=t.neumayer@ove.at

Wien, 2023 04 18

Dipl.-Ing. T. Neumayer

Manufacturer:

King-Cord Co. Ltd.
No. 52-5 Siasihhu Shanghu Village,
Yangmei Township
Taoyuan County 326
Taiwan

Factory location(s):

King-Cord Electronics (Shenzhen) Co., Ltd.
No. B2, The West Industry Park of Tan Tou,
Song Gang Town, Bao'an District
518105 Shenzhen, Guangdong
China

Tested and certified according to:

EN IEC 60320-1:2021

This certificate is the basis for the EU Declaration of Conformity and the CE Marking by the manufacturer or his agent and shows the conformity of the certified product(s) with the listed standards as defined by the **EU Low-Voltage Directive 2014/35/EU**. For the presumption of conformity according to Art. 12 with the safety objectives according to Art. 3 of the Directive, transitional periods given in the Official Journal of the European Union have to be observed.

KING-CORD Confidential Proprietary

Product: Connector for Class I appliances with cord

Type designation: *Rating:*	***Trademark:***
KC-003 Rated voltage: AC 250 V Rated current: 10 A H05VV-F 3 G 0,75	KING CORD
KC-003 Rated voltage: AC 250 V Rated current: 10 A H05VV-F 3 G 1	KING CORD
KC-003 Rated voltage: AC 250 V Rated current: 10 A H05VV-F 3 G 1,5	KING CORD

KC-003R KING CORD
Rated voltage: AC 250 V
Rated current: 10 A
H05VV-F 3 G 0,75

KC-003R KING CORD
Rated voltage: AC 250 V
Rated current: 10 A
H05VV-F 3 G 1

KC-003R KING CORD
Rated voltage: AC 250 V
Rated current: 10 A
H05VV-F 3 G 1,5

KING-CORD
Confidential Proprietary

CERTIFICATE

FOR EUROPEAN PRODUCT SAFETY

Reference No. SE-S-2200924

Connector for Class I equipment for cold condition

Type designation:	KC-003, KC-003R
Certificate holder:	King Cord Co. Ltd. 8F-3 No.124 Sianjheng 3rd. Rd., 302 Jhubei City, Hsinchu County, Taiwan
The product complies with the standard(s):	EN IEC 60320-1:2021
Date of expiry:	26 July, 2027
EU Directive information:	According to the principle of presumption of conformity, this certificate constitutes support for an EU Declaration of Conformity to the Low Voltage Directive 2014/35/EU.

Additional information in Appendix

Certification Body: Intertek Semko AB, Product Certification **Place:** Kista - Stockholm

Signed: **Date:** 26 July, 2022

Hyden Li

This Certificate is for the exclusive use of Intertek's client and is provided pursuant to the agreement between Intertek and its Client. Intertek's responsibility and liability are limited to the terms and conditions of the agreement. Intertek assumes no liability to any party, other than to the Client in accordance with the agreement, for any loss, expense or damage occasioned by the use of this Certificate. Only the Client is authorized to permit copying or distribution of this Certificate and then only in its entirety. Any use of the Intertek name or one of its marks for the sale or advertisement of the tested material, product or service must first be approved in writing by Intertek.

APPENDIX:

Reference No. SE-S-2200924

Technical Data:

Type designation	KC-003, KC-003R
Rated voltage (V)	250~
Rated current (A)	10
Class	I
IP-Class	20
Type of cord	H05VV-F, H05Z1Z1-F, H05BQ-F
Number of conductors	3
Conductor area	0,75-1,5mm^2, 0,75-1,5mm^2, 0,75-1,0mm2 (Max. length 2m for 0,75mm^2)
Standard sheet	C13 of EN 60320-3
Trademark	**KING-CORD**
Test Report	220601058SHA-001
Product information	For class I equipment for cold conditions, non-rewirable KC-003: with longitudinal cord entry. KC-003R: with lateral cord entry.

Manufacturing Sites: King-Cord Electronics (Shenzhen) Co., Ltd.
No. B2, The West Industry Park of Tan Tou, Song Gang Town, Bao'an District, Shenzhen City, Guangdong, China

The certificate applies for countries that have sanctioned the use of plugs/outlets according to subject standard sheet and component standard.

This certificate replaces previously issued ref. No. 1715055 dated 10 August 2017.

According to the principle of presumption of conformity, this certificate, which includes production control, constitutes support for an EU Declaration of Conformity to the Low Voltage Directive 2014/35/EU.
This presumption can expire before end of validity of this certificate due to new issued Standard or Amendment and changes within the EU legislation.

Certification Body: Intertek Semko AB, Product Certification **Place:** Kista - Stockholm

Signed: **Date:** 26 July, 2022

Hyden Li

This Certificate is for the exclusive use of Intertek's client and is provided pursuant to the agreement between Intertek and its Client. Intertek's responsibility and liability are limited to the terms and conditions of the agreement. Intertek assumes no liability to any party, other than to the Client in accordance with the agreement, for any loss, expense or damage occasioned by the use of this Certificate. Only the Client is authorized to permit copying or distribution of this Certificate and then only in its entirety. Any use of the Intertek name or one of its marks for the sale or advertisement of the tested material, product or service must first be approved in writing by Intertek.

DEMKO CERTIFICATE

Certificate No.	D-09474
Page	1/3
Date of Issue	2022-09-02
Certificate Holder	KING-CORD CO LTD 8TH FL-3 NO 124 XIANZHENG 3RD ST ZHUBEL, Hsinchu Hsien, 302 TAIWAN
Production site	KING-CORD ELECTRONICS (SHEN ZHEN) CO LTD B2 WEST INDUSTRY PARK OF TAN TOU SONG GANG TOWN BAO'AN SHENZHEN, GUANGDONG, 518105 CHINA
Certified Product	Connector for Class I equipment for cold condition
Model	KC-003, KC-003R
Trademark	KING-CORD
Ratings	250V ~ 10A Class I IP20
Tested according to	EN IEC 60320-1:2021
Test Report No.	SE-S-2200924 issued on 2022-07-26
Additional	Type of cord: H05VV-F, H05Z1Z1-F, H05BQ-F Number of conductors: 3 Conductor area: 0,75-1,5mm^2, 0,75-1,5mm^2, 0,75-1,0mm^2 (Max. length 2m for 0,75mm^2) Standard sheet: C13 of EN 60320-3 Product information: For class I equipment for cold conditions, non-rewirable KC-003: with longitudinal cord entry. KC-003R: with lateral cord entry.
Expire date	2027-07-26

KING-CORD Confidential Proprietary

Certification Manager
Jan-Erik Storgaard

This is to certify that representative sample(s) of the Product described herein ("Certified Product") have been investigated and found in compliance with the Standard(s) indicated on this Certificate, in accordance with the D-Mark Requirements. As specified in the respective appendix below the Designated Certificate holder is entitled to use the D-Mark, or its alternative for cables, for the Certified Product manufactured at the production site(s) identified above, in accordance with the D-Mark Service Agreement, including without limitation the D-Mark Testing and Certification Services Service Terms. Only those Products bearing the D-Mark should be considered as being covered by UL's D-Mark Service. This Certificate shall remain valid through the expiration date, unless terminated earlier in accordance with the Service Agreement including without limitation if the Standard identified on this Certificate is amended or withdrawn prior the expiration date.

Certification Body

UL International Demko A/S, Borupvang 5A, DK-2750 Ballerup, Denmark, Tel. +45 44 85 65 65,
info.dk@ul.com
www.UL.com

Appendix DEMKO CERTIFICATE

Certificate No. D-09474
Page 2/3
Date of Issue 2022-09-02

Certification Mark D-Mark

The D-Mark, as displayed below, shall appear on certified products only. Except as specified below the Mark shall be legible and no Minimum size is specified.

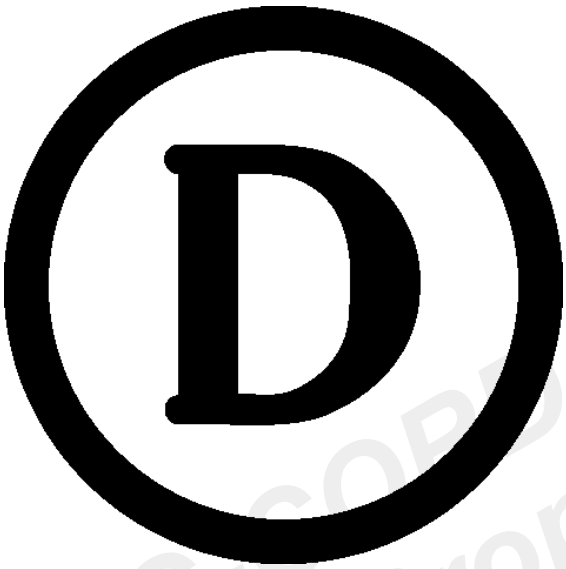

The size of the Mark may be reduced or enlarged on the condition that it remains readable and that the proportions of width and height are kept. The use of dark text for the D-Mark on light backgrounds and light text on dark backgrounds is permitted.

The D-Mark may appear on a label, nameplate, or may be cast, stamped or molded into the product. When appearing on a label or nameplate, the Manufacturer's name or trademark along with a model number are also required on that same label or nameplate. If cast, stamped or molded, the Certificate Manufacturer's name or trademark and model number shall also appear elsewhere on the product

When putting the product on the EU market, the manufacturer's name, trademark or mark of origin must be affixed in a clearly visible location and position on the product, on the package and in the user manual. It can be affixed by label, be directly imprinted, or cast or molded into the product.

Where the size of the product does not allow the Mark, the manufacturer's name, trademark, mark of origin and model number to be legible, and appearance on a label is not desired, it is allowed to cast, stamp or mold the Mark into the product, in a size which is not visible to the naked eye, provided the legible Mark, the manufacturer's name, trademark or mark of origin and model number appears on the package and in the user manual

KING-CORD Confidential Proprietary

Appendix DEMKO CERTIFICATE

Certificate No. D-09474
Page 3/3
Date of Issue 2022-09-02

Alternate certification Mark for cables

As an alternative to the D-Mark specified above the alternate D-Mark, displayed below, can appear on certified cables only. Minimum size is not specified, as long as the mark is legible.

◅DEMKO▻

The alternate D-Mark may be cast, stamped or molded into the cable and continue throughout the length of the cable as specified in the applicable cable standard.

All content shall be in accordance with the details provided on this D-Mark Certificate.

KING-CORD
Confidential Proprietary

Certification Body

UL International Demko A/S, Borupvang 5A, DK-2750 Ballerup, Denmark, Tel. +45 44 85 65 65, info.dk@ul.com www.UL.com

CERTIFICATE

P24227542

Applicant	King-Cord Co., Ltd. 8F-3 No.124 Sianjheng 3rd. Rd., 302 Jhubei City, Hsinchu County, Taiwan
Manufacturer	King-Cord Co., Ltd. 8F-3 No.124 Sianjheng 3rd. Rd., 302 Jhubei City, Hsinchu County, Taiwan
Factory	King-Cord Electronics (ShenZhen) Co., Ltd. No. B2, The West Industry Park of Tan Tou, Song Gang Town, Bao`an District, Shenzhen City, Guangdong 518105 China
Project Number	PRJ0042996
Product	Connector
Model/Type Ref.	KC-003
Ratings	10A 250V~
Brandname / Trademark	KING-CORD
Principal Characteristics	Non-rewirable connector for Class I equipment for cold condition, Standard Sheet C13, thermoplastic. With cable H05VV-F 3G0.75-1.5mm² (max. length 2m for 3G0.75mm² cord) manufactured by Baohing or I-Sheng or King cord, straight cable entry, IP20.
A sample of the product was tested and found to be in conformity with	Safety EN 60320-3:2014;A1;A2 EN IEC 60320-1:2021
Validity	*This certificate documents conformity with the standards shown, and also applies as license for use of Nemko's name and certification mark. The certificate and license is valid as long as the applicable conditions are complied with, and provided that any changes to the product are notified to Nemko for acceptance prior to implementation.* *New standards or amendments to the standards may imply that the product design must be updated and/or that re-testing and re-certification is necessary.*
Additional Information	
Additional model(s)	See next pages

Signature

Sweet Yuan

Certification department

Date of Issue

2024-03-20

Nemko Group AS
Philip Pedersens vei 11
1366 Lysaker, Norway
TEL +47 22 96 03 30
info@nemko.com
ENTERPRISE NUMBER
NO974404532

Working for a more sustainable future
Please do not print

CERTIFICATE

P24227542

Product	Connector
Variant	1
Model/Type Ref.	KC-003R
Ratings.	10A 250V~
Brandname / Trademark (if different from page 1)	
Principal Characteristics	Non-rewirable connector for Class I equipment for cold condition, Standard Sheet C13, thermoplastic. With cable H05VV-F 3G0.75-1.5mm² (max. length 2m for 3G0.75mm² cord) manufactured by Baohing or I-Sheng or King cord, angled cable entry, IP20.

Product	Connector
Variant	2
Model/Type Ref.	KC-003
Ratings.	10A 250V~
Brandname / Trademark (if different from page 1)	
Principal Characteristics	Non-rewirable connector for Class I equipment for cold condition, Standard Sheet C13, thermoplastic. With cable H05Z1Z1-F 3G0.75-1.5mm² (max. length 2m for 3G0.75mm² cord) manufactured by Baohing, straight cable entry, IP20.

Product	Connector
Variant	3
Model/Type Ref.	KC-003
Ratings.	10A 250V~
Brandname / Trademark (if different from page 1)	
Principal Characteristics	Non-rewirable connector for Class I equipment for cold condition, Standard Sheet C13, thermoplastic. With cable H05BQ-F 3G0.75-1.0mm² (max. length 2m for 3G0.75mm² cord) manufactured by TA HSING, straight cable entry, IP20.

Product	Connector
Variant	4
Model/Type Ref.	KC-003R
Ratings.	10A 250V~
Brandname / Trademark (if different from page 1)	
Principal Characteristics	Non-rewirable connector for Class I equipment for cold condition, Standard Sheet C13, thermoplastic. With cable H05Z1Z1-F 3G0.75-1.5mm² (max. length 2m for 3G0.75mm² cord) manufactured by Baohing, angled cable entry, IP20.

Signature

Sweet Yuan

Certification department

Date of Issue 2024-03-20

Working for a more sustainable future
Please do not print

Nemko Group AS
Philip Pedersens vei 11
1366 Lysaker, Norway
TEL +47 22 96 03 30
info@nemko.com
ENTERPRISE NUMBER
NO974404532

www.nemko.com

CERTIFICATE

P24227542

Product	Connector
Variant	5
Model/Type Ref.	KC-003R
Ratings.	10A 250V~
Brandname / Trademark (if different from page 1)	
Principal Characteristics	Non-rewirable connector for Class I equipment for cold condition, Standard Sheet C13, thermoplastic. With cable H05BQ-F 3G0.75-1.0mm² (max. length 2m for 3G0.75mm² cord) manufactured by TA HSING, angled cable entry, IP20.

Signature

Sweet Yuan

Certification department

Date of Issue

2024-03-20

Working for a more sustainable future
Please do not print

Nemko Group AS
Philip Pedersens vei 11
1366 Lysaker, Norway
TEL +47 22 96 03 30
info@nemko.com
ENTERPRISE NUMBER
NO974404532

www.nemko.com

CERTIFICATE FI/41478

Our Ref. HEL-CERT220801287-01

Product	Connector, non-rewirable
Type	KC-003, with cord H05VV-F 3G0,75-1-1,5 KC-003, with cord H05Z1Z1-F 3G0,75-1-1,5 KC-003, with cord H05BQ-F 3G0,75-1 KC-003R, with cord H05VV-F 3G0,75-1-1,5 KC-003R, with cord H05Z1Z1-F 3G0,75-1-1,5 KC-003R, with cord H05BQ-F 3G0,75-1
Trademark	KING-CORD
Certificate Holder	King Cord Co., Ltd. 8F-3 No.124 Sianjheng 3rd. Rd., 302 Jhubei, Hsinchu County, Taiwan
Technical information	10 A, 250 V~, IP20
Other information	Standard sheet C13 Max. length 2 m for 0,75 mm^2 KC-003: with longitudinal cord entry. KC-003R: with lateral cord entry.
The product is certified according to the following standard(s)	EN IEC 60320-1:2021
Validity	This certificate is valid until 2027-09-07 provided that the Conditions for FI certification are met. This certificate includes the right to use the FI mark under the condition that changes (if any) will be checked at SGS Fimko before the product is brought onto market and that the conditions for FI certification are met.
Date of issue	2022-09-07
	SGS Fimko Ltd
Signature	Joonas Leinonen Certification Manager

Confidential KING proprietary

This document is issued by the Company under its General Conditions of Service accessible at http://www.sgs.com/terms_and_conditions.htm. Attention is drawn to the limitation of liability, indemnification and jurisdiction issues defined therein.

Any holder of this document is advised that information contained hereon reflects the Company's findings at the time of its intervention only and within the limits of Client's instructions, if any. The Company's sole responsibility is to its Client and this document does not exonerate parties to a transaction from exercising all their rights and obligations under the transaction documents. Any unauthorized alteration, forgery or falsification of the content or appearance of this document is unlawful and offenders may be prosecuted to the fullest extent of the law.

SGS Fimko Ltd
Takomotie 8, FI-00380 Helsinki, Finland
t. +358 9 696 361 www.sgs.fi
Business ID 0978538-5 Member of the SGS Group (SGS SA)

Manufacturer

King Cord Co., Ltd.
8F-3 No.124 Sianjheng 3rd. Rd., 302 Jhubei, Hsinchu County, Taiwan

Manufacturing site

King-Cord Electronics (Shenzhen) Co., Ltd.
No.B2 The West Industry Park of Tan Tou, Song Gang Town, Bao an District, Shenzhen, 518105, Guangdong, China

Directive information

The certified product(s) fulfils requirements of mentioned standard(s) which are harmonised under the Low Voltage Directive (2014/35/EU) at the date of issue of the certificate.

Additional information

The products have certificate no. SE-S-2200924 issued by Intertek Semko AB in accordance with the Nordic Certification Service system.

List of cords:

Manufacturer	Type	Mark(s) of conformity
Shenzhen Baohing Electric Wire & Cable Manufacture Co., Ltd..	H05VV-F 3G0,75-1,5	VDE 103727
	H05Z1Z1-F 3G0,75-1,5	VDE 40023534
I-Sheng Electric Wire & Cable Co., Ltd.	H05VV-F 3G0,75-1,5	VDE 40006070
King Cord Co., Ltd.	H05VV-F 3G0,75-1,5	VDE 40042910
TA HSING Electric Wire & Cable Co., Ltd.	H05BQ-F 3G0,75-1,0	VDE 40024061

As shown in the Test Report(s) No(s): 220601058SHA-001

KING Confidential property

FINAS
Finnish Accreditation Service
S003 (EN ISO/IEC 17065)

This document is issued by the Company under its General Conditions of Service accessible at http://www.sgs.com/terms_and_conditions.htm. Attention is drawn to the limitation of liability, indemnification and jurisdiction issues defined therein.

Any holder of this document is advised that information contained hereon reflects the Company's findings at the time of its intervention only and within the limits of Client's instructions, if any. The Company's sole responsibility is to its Client and this document does not exonerate parties to a transaction from exercising all their rights and obligations under the transaction documents. Any unauthorized alteration, forgery or falsification of the content or appearance of this document is unlawful and offenders may be prosecuted to the fullest extent of the law.

SGS Fimko Ltd
Takomotie 8, FI-00380 Helsinki, Finland
t. +358 9 696 361 www.sgs.fi
Business ID 0978538-5 Member of the SGS Group (SGS SA)

IMQ S.p.A. - Società con Socio Unico
I-20138 Milano - via Quintiliano, 43
tel. 0250731 (r.a.) - fax 0250991500
e-mail: info@imq.it - www.imq.it

Rea Milano 1595884
Registro Imprese Milano 12898410159
C.F./P.I. 12898410159
Capitale Sociale € 4.000.000

CA02.02439
SN.F000U5

PID:
02115100
CID:
C.1993.5052

Certificato di approvazione

Approval certificate

ACCREDIA
L'ENTE ITALIANO DI ACCREDITAMENTO

PRD N° 005B

Membro degli Accordi di Mutuo Riconoscimento EA, IAF e ILAC
Signatory of EA, IAF and ILAC Mutual Recognition Agreements

IMQ, ente di certificazione accreditato, autorizza la ditta

IMQ, accredited certification body, grants to

King Cord Co., Ltd.
8F-3 No.124 Sianjheng 3rd Rd
302 JHUBEI CITY, HSINCHU COUNTRY
TW - Taiwan

all'uso del marchio

the licence to use the mark

IMQ

Il presente certificato è soggetto alle condizioni previste nel Regolamento "MARCHI IMQ - Regolamento per la certificazione di prodotti" ed è relativo ai prodotti descritti nell'Allegato al presente certificato.

KING-CORD Confidential/Proprietary

per i seguenti prodotti

for the following products

Prese di connettore indissolubilmente collegate al cavo
(Rif. di tipo KC-003)

Non-rewirable connectors
(Type ref. KC-003)

This certificate is subjected to the conditions foreseen by Rules "IMQ MARKS - RULES for product certification" and is relevant to the products listed in the annex to this certificate.

Emesso il / Issued on ***2005-07-06***

Aggiornato il / Updated on ***2019-09-18***

Sostituisce / Replaces ***2010-12-13***

IMQ S.p.A.

IMQ S.p.A. - Società con Socio Unico
I-20138 Milano - via Quintiliano, 43
tel. 0250731 (r.a.) - fax 0250991500
e-mail: info@imq.it - www.imq.it

Rea Milano 1595884
Registro Imprese Milano 12898410159
C.F./P.I. 12898410159
Capitale Sociale € 4.000.000

Allegato - Certificato di approvazione
Annex - Approval certificate

Emesso il / Issued on 2005-07-06
Aggiornato il / Updated on 2019-09-18
Sostituisce / Replaces 2010-12-13

Prodotto | Product

Prese di connettore indissolubilmente collegate al cavo
Non-rewirable connectors

Concessionario | Licence Holder

King Cord Co., Ltd.
8F-3 No.124 Sianjheng 3rd Rd
302 JHUBEI CITY, HSINCHU COUNTRY
TW - Taiwan

Marchio | Mark

IMQ

Costruito a | Manufactured at

PI.C0000I C01047943

SongGang Town,Bao'An Dist.Shenzhen City, China

Copia del presente certificato deve essere conservata presso i luoghi di produzione sopra elencati.

Copy of this certificate must be available at the manufacturing places listed above

Norme / Specifiche tecniche

Prodotto/i conforme/i alle Norme/Specifiche tecniche:

EN 60320-1:2015
EN 60320-3:2014
Prodotti conformi agli obiettivi di sicurezza della Direttiva B.T. 2014/35/UE (Allegato I).

Standards / Technical specifications

Product/s complying to Standards/Technical specifications:

EN 60320-1:2015
EN 60320-3:2014
Products meeting the safety objectives of Low Voltage Directive 2014/35/EU (Annex I).

Rapporti | Test Reports

MI19-0042322

Caratteristiche tecniche | Technical characteristics

Designazione / Type designation	**2P+T foglio C13 / 2P+E S.S. C13**
Tensione nominale / Rated voltage	**250 V**
Corrente nominale / Rated current	**10 A**
Tipo di applicazione / Type of application	**fredda / for cold conditions**
Tipo di morsetti / Type of terminals	**morsetti aggraffati / crimped connections**
Materiale della custodia / Material of the cover	**termoplastico / thermoplastic**
Uscita cavo / Cable exit	**assiale / straight**

Articoli (con dettagli) | Articles (with details)

AR.F007IS

Marca / Trade mark	**KING-CORD**
Riferimento di tipo / Type reference	**KC-003**
Tipo di cavo / Type of cable	**H05VV-F**
Sezione nominale / Section areas	**3G0,75 mm²**

AR.F007IV

Marca / Trade mark	**KING-CORD**
Riferimento di tipo / Type reference	**KC-003**
Tipo di cavo / Type of cable	**H05VV-F**
Sezione nominale / Section areas	**3G1,00 mm²**

AR.F007IW

Marca / Trade mark	**KING-CORD**
Riferimento di tipo / Type reference	**KC-003**

KING-CORD Confidential Proprietary

Tipo di cavo / Type of cable **H05VV-F**
Sezione nominale / Section areas **3G1,50 mm²**

Ulteriori informazioni |Additional Information

La presa di connettore rif. di tipo KC-003 è prodotta con il seguente inserto:
marca Han Ba Co., Ltd., art. HB-003, colore bianco.

The non-rewirable connector type ref. KC-003 is manufactured with the following insert:
trade mark Han Ba Co., Ltd., type ref. HB-003, white colour.

Componenti | Component List

KC-003

Tipo / Type	*(*)*	*Costruttore / Manufacturer*	*Riferimento / Type Ref.*	*Dati / Data*	*Norme / Standard (*)*	*Marchi / Marks*
Cavo/Cable	2/4	Shenzhen Baohing Electric Wire&Cable Mfr. Co.,Ltd.		H05VV-F	-	IMQ
Cavo/Cable	2/4	I-Sheng Electric Wire & Cable Co.,Ltd.		H05VV-F	-	IMQ
Cavo/Cable	2	King Cord		H05VV-F	-	IMQ

Emesso il | Issued on **2005-07-06** *Data di aggiornamento | Updated on* **2019-09-18** *Sostituisce | Replaces* **2010-12-13**

Ciascun componente è contraddistinto da un numero avente il seguente significato:
1 - Componente marchiato e sostituibile con altro pure marchiato con caratteristiche equivalenti
2 - Componente sostituibile solo previa autorizzazione dell'IMQ
3 - Componente (integrato nell'apparecchio utilizzatore) provato congiuntamente all'apparecchio utilizzatore
4 - Componente in alternativa
5 - Componente per uso opzionale
6 - Componente da abbinare

Each component is signed by a number having the following meaning:
1 - Approved component replaceable with another one also approved with equivalent characteristics
2 - Component replaceable with IMQ authorization only
3 - Integrated component tested together with appliances
4 - Alternative component
5 - Component for optional use
6 - Component to be matched

(*) Queste colonne sono compilate a cura di IMQ / These colomns are filled in by IMQ

KING-CORD Confidential Proprietary

Diritti di concessione | Annual Fees

SN.F000U5	**BTT.021100.DA19**	*Importo modelli IMQ - 0211 - Prese, spine e connettori di uso domestico / IMQ models - 0211 - Plugs and appliance couplers for domestic purposes*	1

Schweizerische Eidgenossenschaft
Confédération suisse
Confederazione Svizzera
Confederaziun svizra

Swiss Confederation

Federal Inspectorate for Heavy Current Installations ESTI
Market Surveillance/Safety Mark

King Cord Co. Ltd.
8F-3, No. 124, Sianjheng 3rd. Rd.
Jhubei City, Hsinchu County302
TAIWAN

Client no.	Your reference	Our reference	Date
2612	Grace Kao	Christoph Meile	09.07.2024

Authorization

Number: **24.0473**
valid until: **08.07.2027**

Marking: KT 501
Company Logo

Based on the documents contained in file **24-BS-0256**, the Federal Inspectorate for Heavy Current Installations grants the firm named above the right to put the equipment listed below on the market marked with the Swiss safety mark in accordance with the NEV.

Equipment: **Connector, non-rewirable**

Tradename: **KING-CORD**

Type designation	Nominal values
KC-003	250V~ 10A L+N+PE standard sheet C13 with non-rewirable cords: H05VV-F 3G 0.75mm² [I-Sheng SGIS] H05VV-F 3G 1.00mm² [I-Sheng SGIS] H05VV-F 3G 1.50mm² [I-Sheng SGIS] H05VV-F 3G 0.75mm² [King-Cord] H05VV-F 3G 1.00mm² [King-Cord] H05VV-F 3G 1.50mm² [King-Cord]

Federal Inspectorate for Heavy Current Installations ESTI
Luppmenstrasse 1, CH-8320 Fehraltorf
T +41 58 595 18 18
mub.bs.info@esti.ch
www.esti.admin.ch

SWISS ACCREDITATION sas.admin.ch SCESp 0033

Schweizerische Eidgenossenschaft
Confédération suisse
Confederazione Svizzera
Confederaziun svizra

Swiss Confederation

Authorization	Number: **24.0473**
Type designation	Nominal values
KC-003R	250V~ 10A L+N+PE standard sheet C13 with non-rewirable cords: H05VV-F 3G 0.75mm² [I-Sheng SGIS] H05VV-F 3G 1.00mm² [I-Sheng SGIS] H05VV-F 3G 1.50mm² [I-Sheng SGIS] H05VV-F 3G 0.75mm² [King-Cord] H05VV-F 3G 1.00mm² [King-Cord] H05VV-F 3G 1.50mm² [King-Cord]
Protection class:	for class I equipment
Protection degree:	ordinary
Basis:	Marks Approval / VDE / 40014553 / 26.06.2024
Remark:	Manufacturing sites: 1. King-Cord Electronics (Shenzhen) Co., Ltd. No. B2 The West Industry Park of TanTou, Song Gang Town, 518105 Bao-An District, Shenzhen City, Guangdong, CHINA
Test standards:	EN IEC 60320-1:2021 EN 60320-3:2014+A1:21

Federal Inspectorate for Heavy Current Installations ESTI

Severo Nicoli
Head of Market Surveillance/Safety Mark

中国国家强制性产品认证证书

证书编号：2002010204019895

发证日期：2023 年 04 月 23 日
有效期至：2028 年 04 月 22 日

认证委托人名称及注册地址	光州电子(深圳)有限公司 深圳市宝安区松岗街道潭头西部工业园区 B2 栋一楼、二楼西北面、三楼
产品生产者名称及注册地址	光州电子(深圳)有限公司 深圳市宝安区松岗街道潭头西部工业园区 B2 栋一楼、二楼西北面、三楼
生产企业名称及生产地址	光州电子(深圳)有限公司 深圳市宝安区松岗街道潭头西部工业园区 B2 栋一楼、二楼西北面、三楼
产品名称和系列、规格、型号	用于冷条件下 I 类设备的 10A 250V 连接器 KC-003、KC-003R 10A 250V ~(配 60227IEC53 3×0.75mm2、60227IEC53 3×1mm2、60227IEC53 3×1.5mm2)
产品标准和技术要求	GB/T 17465.1-2022;GB/T 17465.6-2022

上述产品符合 CNCA-C02-01:2014 认证规则的要求，特发此证。

证书有效期内本证书的有效性依据发证机构的定期监督获得保持。

本证书为变更证书，证书首次颁发日期：2002 年 10 月 28 日

经中国合格评定国家认可委员会认可 CNAS C001-P

可通过扫描下方二维码或登录国家认监委网站（www.cnca.gov.cn）查验证书信息

签发：谢肇煦

中国质量认证中心

CERTIFICATE FOR CHINA COMPULSORY PRODUCT CERTIFICATION

CERTIFICATE NO.: 2002010204019895

Valid from: Apr.23,2023

Valid until: Apr.22,2028

NAME AND REGISTERED ADDRESS OF THE APPLICANT	KING CORD ELECTRONIC (SHENZHEN)CO.,LTD 1F,North-West of 2F,3F of No.B2，The West Industry Park of Tantou, SongGang Street,Bao'An District, Shenzhen City
NAME AND REGISTERED ADDRESS OF THE MANUFACTURER	KING CORD ELECTRONIC (SHENZHEN)CO.,LTD 1F,North-West of 2F,3F of No.B2，The West Industry Park of Tantou, SongGang Street,Bao'An District, Shenzhen City
NAME AND LOCATION OF THE FACTORY	KING CORD ELECTRONIC (SHENZHEN)CO.,LTD 1F,North-West of 2F,3F of No.B2，The West Industry Park of Tantou, SongGang Street,Bao'An District, Shenzhen City
PRODUCT MODEL(S)	10A 250V CONNECTOR FOR CLASS I EQUIPMENT FOR COLD CONDITIONS KC-003、KC-003R 10A 250V～（with60227IEC53 3×0.75mm2、60227IEC53 3×1mm2、60227IEC53 3×1.5mm2）
STANDARDS AND TECHNICAL REQUIREMENTS	GB/T 17465.1-2022;GB/T 17465.6-2022

This is to certify that the above mentioned product(s) complies with the requirements of implementation rules for compulsory certification(REFNO. CNCA-C02-01:2014)

The validity of the certificate is subject to positive result of the regular follow up inspection by issuing certification body until the expiry date.

Date of original issued: Oct.28,2002

Accredited by China National Accreditation Service for Conformity Assessment CNAS C001-P

The certificate information is available through the QR code below or CNCA's website: www.cnca.gov.cn

SIGNATURE: 谢肇煦

CHINA QUALITY CERTIFICATION CENTRE

OFFICE OF **FAIR TRADING**
NSW Consumer Protection Agency
Department of Commerce

The Manager
King-Cord Co Ltd
C/- Ms Grace Kao
VDE Representative Office - Giant Lab Co
7F-2, No 600, Sec 2, Chung Hua Road
TAIPEI 108 TAIWAN

File Ref: N20414/1
Contact: Liz Whitehead
Telephone: (02) 9895 0702
Facsimile: (02) 9895 0423

Dear Sir/Madam

CERTIFICATE OF APPROVAL NUMBER: 20414 AND MODIFICATION/S

Appliance Connector

Please find enclosed a Certificate of Approval and addendum as sought by your application.

Articles of the approved type/s may now be marketed in any State or Territory of Australia, provided they are marked with-
(a) the mark (or marks) shown on the Certificate; or
(b) the Regulatory Compliance Mark (RCM) provided that the requirements of all relevant parts of AS/NZS 4417 applicable to the article are fulfilled.

THE APPROVAL EXPIRES ON THE DATE SHOWN ON THE CERTIFICATE unless it is renewed, extended, suspended or cancelled.

Any sample/s held by the Department should be collected within fifteen (15) days of this letter or the sample/s will be destroyed.

Yours faithfully

for Commissioner for Fair Trading
12 July 2004

OFFICE OF **FAIR TRADING**
NSW Consumer Protection Agency
Department of Commerce

Certificate Number: 20414

CERTIFICATE OF APPROVAL

ISSUED PURSUANT TO SECTION 21C OF THE ELECTRICITY SAFETY ACT 1945

ISSUED TO:

King-Cord Co Ltd

CLASS OF ARTICLE:

Appliance Connector

DESCRIPTION OF ARTICLE:

Non-rewireable appliance connector type C13 integrally moulded to an Australian approved or <HAR> certified H05VV-F 3G1.0mm² flexible cord.
Trade name "King-Cord"
240V 10A

EXAMINED FOR COMPLIANCE WITH: AS/NZS 3109:1996 A1

TYPE REFERENCE CODE: KC-003

APPROVAL MARK:

Each electrical article of the abovementioned type shall be marked with Approval Number N20414 or N13389

DATE OF APPROVAL: 12 July 2004
This approval expires 12 July 2009 unless suspended, cancelled, renewed or extended.

for Commissioner for Fair Trading

Ref: N20414/1

ADDENDUM TO CERTIFICATE OF APPROVAL No 20414

Particulars of Modification(s)

Original Model KC-003 alternatively moulded to an Australian approved or <HAR> certified H05VV-F 3G1.5mm² flexible cord.

Original Model KC-003 alternatively moulded to an Australian approved or <HAR> certified H05VV-F 3G0.75mm² flexible cord of length not exceeding 2 metres.

Approved: 12 July 2004

for Commissioner for Fair Trading

Head Office 1Fitzwilliam Street Parramatta PO Box 972 NSW 2124 Australia
Tel (02) 9895 0111 Fax (02) 9895 0222 DX 28437 Parramatta

NSW GOVERNMENT | Fair Trading

File Ref: NSW20414/3
Contact: Admin Clerk
Telephone: 02 9895 0722
Fax: 02 9895 9917

Ms Grace Kao
King-Cord Co Ltd
C/- VDE Global Services HK Ltd Taiwan Branch
9F, No 77, Sec 1, Zhonghua Road
TAIPEI CITY
Taiwan 100

Dear Sir/Madam

RENEWAL OF CERTIFICATE OF APPROVAL: NSW20414

Appliance Connector

Please find enclosed an addendum to the certificate as sought in your application.

THE APPROVAL NOW EXPIRES ON 12/07/2019 unless it is renewed, extended, suspended or cancelled.

Any sample/s held by this Office should be collected within fifteen (15) days of this letter or the sample/s will be destroyed.

Yours faithfully,

For Commissioner for Fair Trading 18 June 2014

Energy & Utilities Unit, NSW Fair Trading,
PO Box 972, Parramatta NSW 2124
02 9895 0722

Email: energyapprovals@services.nsw.gov.au
Website: www.fairtrading.nsw.gov.au

NSW GOVERNMENT | Fair Trading

Ref: NSW20414/3

RENEWAL OF CERTIFICATE OF APPROVAL: NSW20414

Particulars of Renewal

The approval of Appliance Connector Model No. KC-003 and all approved modifications has been renewed for a period of FIVE years.

The Approval expires on 12/07/2019 unless it is renewed, extended, suspended or cancelled.

For Commissioner for Fair Trading

Energy & Utilities Unit, NSW Fair Trading,
PO Box 972, Parramatta NSW 2124
02 9895 0722

Email: energyapprovals@services.nsw.gov.au
Website: www.fairtrading.nsw.gov.au

NSW GOVERNMENT | Fair Trading

File Ref: NSW20414/4
Contact: Admin Clerk
Telephone: 02 9895 0722

Ms Grace Kao
King-Cord Co Ltd
C/- VDE Global Services HK Ltd Taiwan Branch
9F, No 77, Sec 1, Zhonghua Road
TAIPEI CITY, Taiwan 100

Dear Sir/Madam

RENEWAL OF CERTIFICATE OF APPROVAL: NSW20414

Appliance Connector

Please find enclosed an addendum to the certificate as sought in your application.

THE APPROVAL NOW EXPIRES ON 12/07/2024 unless it is renewed, extended, suspended or cancelled.

Any sample/s held by this Office should be collected within fifteen (15) days of this letter or the sample/s will be destroyed.

Yours faithfully,

For Commissioner for Fair Trading

Energy & Utilities Unit, NSW Fair Trading,
PO Box 972, Parramatta NSW 2124
02 9895 0722

Email: energyapprovals@finance.nsw.gov.au
Website: www.fairtrading.nsw.gov.au

NSW GOVERNMENT Fair Trading

Ref: NSW20414/4

RENEWAL OF CERTIFICATE OF APPROVAL: NSW20414

Particulars of Renewal

The approval of Appliance Connector Model No. KC-003 and all approved modifications has been renewed for a period of FIVE years.

The Approval expires on 12/07/2024 unless it is renewed, extended, suspended or cancelled.

For Commissioner for Fair Trading

Energy & Utilities Unit, NSW Fair Trading,
PO Box 972, Parramatta NSW 2124
02 9895 0722

Email: energyapprovals@finance.nsw.gov.au
Website: www.fairtrading.nsw.gov.au

File Ref: NSW20414/5
Contact: Admin Clerk
Telephone: 02 9372 8312

Grace Kao
King-Cord Co., Ltd.
C/- VDE Global Services HK Ltd Taiwan Branch
9F, No. 77, Sec 1, Zhonghua Road
TAIPEI CITY, Taiwan 100

Dear Sir/Madam

RENEWAL OF CERTIFICATE OF APPROVAL: NSW20414

Appliance Connector

Please find enclosed an addendum to the certificate as sought in your application.

THE APPROVAL NOW EXPIRES ON 21/05/2029 unless it is renewed, extended, suspended or cancelled.

Yours faithfully,

23 May 2024

For Secretary, Department of Customer Service

KING-CORD
Confidential Proprietary

Electrical & Gas Approvals
PO Box 972, Parramatta NSW 2124
02 9372 8312

Email: energyapprovals@customerservice.nsw.gov.au
Website: www.fairtrading.nsw.gov.au

Ref: NSW20414/5

RENEWAL OF CERTIFICATE OF APPROVAL: NSW20414

Particulars of Renewal

The approval of Appliance Connector Model No. KC-003 and approved modification has been renewed for a period of FIVE years.

The Approval expires on 21/05/2029 unless it is renewed, extended, suspended or cancelled.

Approved pursuant to Clause 11 (1) of the Gas and Electricity (Consumer Safety) Regulation 2018

23 May 2024

For Secretary, Department of Customer Service

KING-CORD
Confidential Proprietary

Electrical & Gas Approvals
PO Box 972, Parramatta NSW 2124
02 9372 8312

Email: energyapprovals@customerservice.nsw.gov.au
Website: www.fairtrading.nsw.gov.au

King-Cord Co.,Ltd

Material Management Schedule

Edition:Q Date: JAN. 2, 2024

No	Banned or Restricted Substances		Threshold	Controlled Application	Effective Date	Test Methods
1	Metal	Cd and the Compound	<100ppm	Switches, springs, connectors, housings and PCBs, contacts, batteries	Restricted immediately	IEC 62321-5
2	Metal	Pb and the Compound	<1000ppm	Solder, glass, PVC stabilizer	Restricted immediatel	IEC 62321-5
			<40000ppm	Copper alloy containing	Copper alloy is exempt from ROHS exclusion "6C".	
3	Metal	Hg and the Compound	<1000ppm	All applications	Banned immediately	IEC 62321-4
4	Metal	Cr^{6+} and the Compound	<1000ppm	All applications	Restricted immediately	IEC 62321-7/ IEC 62321-5
5	Organic Bromine Compound	Phthalates (DEHP, DBP, BBP, DIBP)	<1000ppm	All applications	Banned immediately	IEC 62321-8
6	Organic Bromine Compound	Polybromides biphenyls(PBBs)	<1000ppm	All applications	Banned immediately	IEC 62321-6
7	Organic Bromine Compound	Polybromides Diphenyl Ethers(PBDEs)(Including decabromodiphenylether[DecaBDE])	<1000ppm	All applications	Banned immediately	IEC 62321-6
8	Organic Bromine Compound	Other Organic Bromine Compound	Not Detectable	All applications	Banned immediately	
9	Organic Chlorine Compound	Polychlorinated Biphenyls(PCB)	Not Detectable	All applications	Banned immediately	
10	Organic Chlorine Compound	Polychlorinated Naphthalenes(PCN)	Not Detectable	All applications	Banned immediately	
11	Organic Chlorine Compound	Polychlorinated Terphenyls(PCT)	Not Detectable	All applications	Banned immediately	
12	Organic Chlorine Compound	Short-chain chlorinated paraffins(SCCP)	Not Detectable	All applications	Banned immediately	
13	Organic Chlorine Compound	Other Organic Chlorin Compound	Not Detectable	All applications	Banned immediately	
14	Organic Tin Compound		Not Detectable	All applications	Banned immediately	
15	Asbesos		Not Detectable	All applications	Banned immediately	
16	Azo Compound		Not Detectable	All applications	Banned immediately	
17	Formaldehyde		Not Detectable	All applications	Banned immediately	ISO 17353
18	Beryllium oxide		Not Detectable	All applications	Banned immediately	
19	Hydrofluorocarbon(HFC),Perfluorocarbon(PFC)		Not Detectable	All applications	Banned immediately	
20	Perfluorooctane sulfonates(PFOS)		Not Detectable	All applications	Banned immediately	
21	Specific benzotriazole		Not Detectable	All applications	Banned immediately	
22	hexabromocyclododecane (HBCD)		Not Detectable	All applications	Banned immediately	
23	perfluorooctanoic acid, its salts, and its precursors (PFOA)		Not Detectable	All applications	Banned immediately	
24	long-chain perfluorocarboxylic acids, their salts, and their precursors (LC-PFCAs)		Not Detectable	All applications	Banned immediately	
25	The total Hg、Cd、 Cr、Pb in the packing should be below 100ppm				Restricted immediately	
	PS: KING-CORD is RoHS 2.0, EU REACH compliant and meets Sony SS-00259 Green Partner standards.					

KING-CORD CO.,LTD

CERTIFICATE OF COMPLIANCE

Edition: Q

KING-CORD hereby warrants and guarantees that our product POWER SUPPLY CORDS is compliant with Directive(EU) 2015/863 amending 2011/65/EU Of the Council on the Restriction of the Use of Certain Hazardous Substances in Electrical and Electronic Equipment (RoHS 2.0), EU REACH(Registration, Evaluation, Authorization and Restriction of Chemicals) regulations and SONY SS-00259 standards.

KING-CORD CO.,LTD.

William Cheng

President

JAN. 2, 2024