**Doc. Number :**

☐ Tentative Specification
☐ Preliminary Specification
■ Approval Specification

# MODEL NO.: R213UCE
# SUFFIX: L01

**Customer: All Customer**

**APPROVED BY** **SIGNATURE**

**Name / Title** _____ _____

Note
**Product Version : CB**

Please return 1 copy for your confirmation with your

| Approved By | Checked By | Prepared By |
|---|---|---|
| 張喻翔 | 陳彥宇 | 葉財源 |



The copyright belongs to InnoLux. Any unauthorized use is prohibited.

# CONTENTS

**1. GENERAL DESCRIPTION ..... 5**
1.1 OVERVIEW ..... 5
1.2 FEATURES ..... 5
1.3 GENERAL SPECIFICATIONS ..... 5
**2. MECHANICAL SPECIFICATIONS ..... 5**
**3. ABSOLUTE MAXIMUM RATINGS ..... 6**
3.1 ABSOLUTE RATINGS OF ENVIRONMENT ..... 6
3.2 ELECTRICAL ABSOLUTE RATINGS ..... 6
3.2.1 TFT LCD MODULE ..... 6
3.2.2 BACKLIGHT UNIT ..... 7
**4. ELECTRICAL SPECIFICATIONS ..... 7**
4.1 FUNCTION BLOCK DIAGRAM ..... 7
4.2. INPUT INTERFACE CONNECTIONS(CN1) ..... 7
4.3 ELECTRICAL CHARACTERISTICS ..... 10
4.3.1 LCD ELETRONICS SPECIFICATION ..... 10
4.3.2 Vcc Power Dip Condition ..... 12
4.3.3 CONVERTER ELECTRICAL CHARATERISTICS ..... 12
4.3.4 CONVERTER INPUT CONNECTOR PIN ASSIGNMENT(CN2) ..... 14
4.4 LVDS INPUT SIGNAL SPECIFICATIONS ..... 15
4.4.1 LVDS DATA INPUT DATA ORDER (VESA Mode) ..... 15
4.4.2 LVDS DATA INPUT DAT ORDER (JEIDA Mode) ..... 15
4.4.3 COLOR DATA INPUT ASSIGNMENT ..... 16
4.5 DISPLAY TIMING SPECIFICATIONS ..... 17
4.6 POWER ON/OFF SEQUENCE ..... 19
**5. OPTICAL CHARACTERISTICS ..... 20**
5.1 TEST CONDITIONS ..... 20
5.2 OPTICAL SPECIFICATIONS ..... 20
**6. RELIABILITY TEST ITEM ..... 24**
**7. PACKING ..... 25**
7.1 PACKING SPECIFICATIONS ..... 25
7.2 PACKING METHOD ..... 25
7.3 PALLET ..... 26
7.4 UNPACKING METHOD ..... 27
**8. INX MODULE LABEL ..... 27**
**9. PRECAUTIONS ..... 29**



The copyright belongs to InnoLux. Any unauthorized use is prohibited.

9.1 ASSEMBLY AND HANDLING PRECAUTIONS ..... 29
9.2 STORAGE PRECAUTIONS ..... 29
9.3 OPERATION PRECAUTIONS ..... 29
9.4 SAFETY PRECAUTIONS ..... 29
9.5 SAFETY STANDARDS ..... 30
9.6 OTHER ..... 30
**Appendix. OUTLINE DRAWING ..... 31**



The copyright belongs to InnoLux. Any unauthorized use is prohibited.

# REVISION HISTORY

| Version | Date | Page | Description |
|---|---|---|---|
| 0.0 | 2014/6/24 | All | Spec Ver.0.0 was first issued. |
| 1.0 | 2014/10/24 | All | Spec Ver.1.0 was first issued. |
| 1.0 | 2014/10/24 | 5 | Section 1.3 update power consumption value |
| 1.0 | 2014/10/24 | 7 | Section 3.2.2 update backlight electrical information |
| 1.0 | 2014/10/24 | 9 | Section 4.3.1 update |
| 1.0 | 2014/10/24 | 12 | Section 4.3.3 note drawing update |
| 1.0 | 2014/10/24 | 20 | Section 5.2 update By vlaue |
| 1.0 | 2014/10/24 | 24 | Section 6 update Vibration Test condition Sine Wave |
| 2.0 | 2016/3/14 | All | Spec Ver.2.0 was first issued. |
| 2.0 | 2016/3/14 | 19 | Section 4.6 POWER ON/OFF SEQUENCE<br>T6(min) change to 5ms |
| 2.0 | 2016/3/14 | 20 | Section 5.2 OPTICAL SPECIFICATIONS<br>Wx change to 0.308, By change to 0.047 |
| 2.0 | 2016/3/14 | 20 | Section 5.2 OPTICAL SPECIFICATIONS<br>Modify response time Tr/Tf to 8ms/8ms (typ) & 15ms/15ms(max) |
| 2.1 | 2016/6/24 | 30 | Refer EC No. CPI-EC160097, revised relative mechanical 2D drawing. |
| 2.2 | 2016/11/4 | 5 | Section 1.3 Surface Treatment add hardness spec. |
| 2.3 | 2017/6/17 | 5 | Section 1.1 & 1.3 display color amount change to 16.8Mega. |
| 3.0 | 2017/9/21 | All | Approval Spec Ver.3.0 was first issued. |
| 3.1 | 2019/5/20 | 30 | Updated OUTLINE DRAWING drawing file for LGP Fixed |
| 3.2 | 2021/1/20 | 27 | INX MODULE LABEL format was modified.. |
| 3.2 | 2021/1/20 | 29 | Change safety standards to UL/IEC 62368-1. |
| 3.3 | 2023/3/10 | 12 | 4.3.3 CONVERTER ELECTRICAL CHARATERISTICS ,backlight off of BL control level and PWM low level of PWM control level ( Max value ) was modified. |
| 3.3 | 2023/3/10 | 24 | 6. RELIABILITY TEST ITEM, required condition of vibration test was modified (Acceleration: 1.5 Grms to 1.5G). |
| 3.4 | 2024/2/05 | 27 | 8. INX MODULE LABEL , added to factory ID |
| 3.5 | 2025/3/31 | 17 | 4.5 DISPLAY TIMING SPECIFICATION, modified vertical display term and horizontal display term min value. |
| 3.5 | 2025/3/31 | 24 | 6. RELIABILITY TEST ITEM, added to note and modified the fixing condition. |



The copyright belongs to InnoLux. Any unauthorized use is prohibited.

# 1. GENERAL DESCRIPTION

## 1.1 OVERVIEW

R213UCE-L01 is a 21.3" TFT Liquid Crystal Display module with LED Backlight unit and one 30-pin 2ch-LVDS interface. This module supports 1600 x 1200 UXGA screen and can display up to 16.8M colors. The module includes build-in converter for Backlight.

## 1.2 FEATURES

This specification applies to the Type 21.3" Color TFT LCD Module, Model R213UCE-L01. This module includes a converter board for the LED backlight unit.

- The screen format is intended to support UXGA 1600(H) x 1200(V) resolution.
- All input signals are LVDS (Low Voltage Differential Signaling) interface.
- This module is UL approved and Rohs compliant

## 1.3 GENERAL SPECIFICATIONS

| Item | Specification | Unit | Note |
|---|---|---|---|
| Screen Size | 21.3" real diagonal | - | - |
| Driver Element | a-si TFT active matrix | - | - |
| Pixel Number | 1600 x R.G.B. x 1200 | Pixel | - |
| Pixel Pitch | 0.27 (H) x 0.27 (V) | mm | - |
| Pixel Arrangement | RGB Vertical stripe | - | - |
| Display Colors | 16.8M | - | - |
| Transmissive Mode | Normally Black | - | - |
| Surface Treatment | Anti-glare , hardness_3H | - | - |
| Luminance, White | 500 | cd/m2 | - |
| Power Consumption | Total 27.4W (typ.), Total 29.7W(Max) | | (1)(2) |

Note (1) The specified power consumption : Total= cell (reference 4.3.1)+Converter (reference 4.3.4)

Note (2) Power Consumption( Max) : Cell 5.0W,Converter 24.7W.

# 2. MECHANICAL SPECIFICATIONS

| Item | | Min. | Typ. | Max. | Unit | Note |
|---|---|---|---|---|---|---|
| Module Size | Horizontal (H) | 456.5 | 457 | 457.5 | mm | (1) |
| | Vertical (V) | 349.5 | 350 | 350.5 | mm | |
| | Thickness (T) | 18.79 | 19.29 | 19.79 | mm | |
| Bezel Area | Horizontal | 437.7 | 438.2 | 438.7 | mm | - |
| | Vertical | 329.5 | 330 | 330.5 | mm | - |
| Active Area | Horizontal | - | 432 | - | mm | - |
| | Vertical | - | 324 | - | mm | - |
| Weight | | 2070 | 2170 | 2270 | g | - |

Note (1) Please refer to the attached drawings for more information of front and back outline dimensions.



The copyright belongs to InnoLux. Any unauthorized use is prohibited.

# 3. ABSOLUTE MAXIMUM RATINGS

## 3.1 ABSOLUTE RATINGS OF ENVIRONMENT

| Item | Symbol | Value | | Unit | Note |
|---|---|---|---|---|---|
| | | Min. | Max. | | |
| Storage Temperature | TST | -20 | 60 | ºC | (1) |
| Operating Ambient Temperature | TOP | 0 | 50 | ºC | (1), (2) |

Note (1)

(a) 90 %RH Max. (Ta < 40 ºC).

(b) Wet-bulb temperature should be 39 ºC Max.

(c) No condensation.

Note (2) The temperature of panel surface should be 0 ºC min. and 65 ºC max.

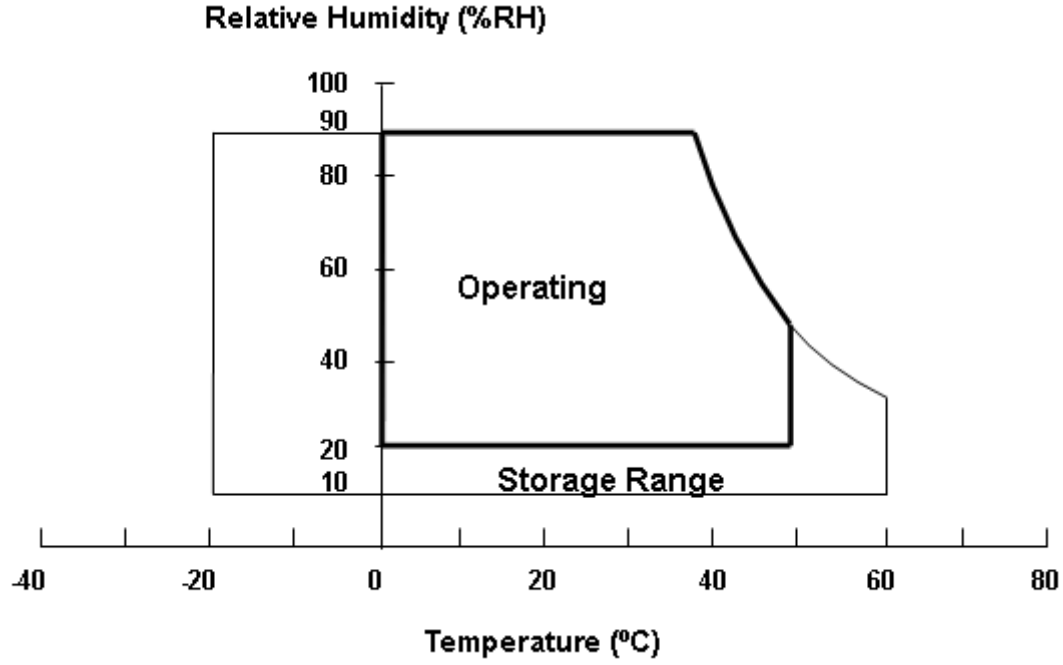


## 3.2 ELECTRICAL ABSOLUTE RATINGS

### 3.2.1 TFT LCD MODULE

| Item | Symbol | Value | | Unit | Note |
|---|---|---|---|---|---|
| | | Min. | Max. | | |
| Power Supply Voltage | VCCS | -0.3 | 13.2 | V | (1) |
| Logic Input Voltage | $V_{IN}$ | -0.3 | 3.6 | V | |



The copyright belongs to InnoLux. Any unauthorized use is prohibited.

### 3.2.2 BACKLIGHT UNIT

| Item | Symbol | Value | | Unit | Note |
|---|---|---|---|---|---|
| | | Min. | Max. | | |
| Light Bar Voltage | $V_W$ | - | 39.6 | V | - |
| Converter Input Voltage | $V_{BL}$ | 10.8 | 13.2 | V | - |
| Control Signal Level | - | 0 | 5 | V | (2) |

Note (1) Permanent damage to the device may occur if maximum values are exceeded. Function operation should be restricted to the conditions described under Normal Operating Conditions.

Note (2) The control signals include On/Off Control and External PWM Control.

## 4. ELECTRICAL SPECIFICATIONS

### 4.1 FUNCTION BLOCK DIAGRAM

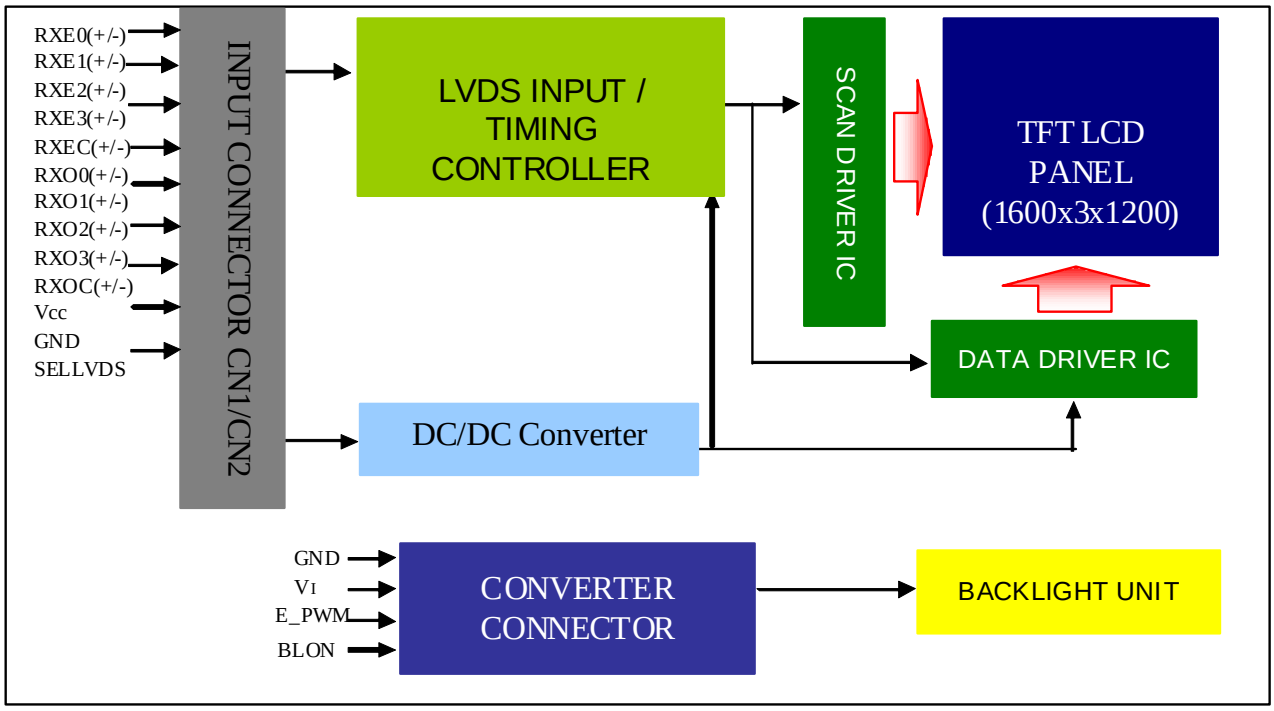


### 4.2. INPUT INTERFACE CONNECTIONS(CN1)

| Pin | Name | Description |
|---|---|---|
| 1 | RXO0- | Negative LVDS differential data input. Channel O0 (odd) |
| 2 | RXO0+ | Positive LVDS differential data input. Channel O0 (odd) |
| 3 | RXO1- | Negative LVDS differential data input. Channel O1 (odd) |
| 4 | RXO1+ | Positive LVDS differential data input. Channel O1 (odd) |
| 5 | RXO2- | Negative LVDS differential data input. Channel O2 (odd) |
| 6 | RXO2+ | Positive LVDS differential data input. Channel O2 (odd) |
| 7 | GND | Ground |
| 8 | RXOC- | Negative LVDS differential clock input. (odd) |



The copyright belongs to InnoLux. Any unauthorized use is prohibited.

| | | |
|---|---|---|
| 9 | RXOC+ | Positive LVDS differential clock input. (odd) |
| 10 | RXO3- | Negative LVDS differential data input. Channel O3(odd) |
| 11 | RXO3+ | Positive LVDS differential data input. Channel O3 (odd) |
| 12 | RXE0- | Negative LVDS differential data input. Channel E0 (even) |
| 13 | RXE0+ | Positive LVDS differential data input. Channel E0 (even) |
| 14 | GND | Ground |
| 15 | RXE1- | Negative LVDS differential data input. Channel E1 (even) |
| 16 | RXE1+ | Positive LVDS differential data input. Channel E1 (even) |
| 17 | GND | Ground |
| 18 | RXE2- | Negative LVDS differential data input. Channel E2 (even) |
| 19 | RXE2+ | Positive LVDS differential data input. Channel E2 (even) |
| 20 | RXEC- | Negative LVDS differential clock input. (even) |
| 21 | RXEC+ | Positive LVDS differential clock input. (even) |
| 22 | RXE3- | Negative LVDS differential data input. Channel E3 (even) |
| 23 | RXE3+ | Positive LVDS differential data input. Channel E3 (even) |
| 24 | NC | For LCD internal use only, Do not connect |
| 25 | SELLVDS | Low (0V) : VESA Mode (Default), High(3.3V) : JEIDA Mode Note(4) |
| 26 | NC | For LCD internal use only, Do not connect |
| 27 | NC | For LCD internal use only, Do not connect |
| 28 | Vcc | +12.0V power supply |
| 29 | Vcc | +12.0V power supply |
| 30 | Vcc | +12.0V power supply |

Note (1) Connector Part No.: P-TWO 187114-30091

Note (2) The first pixel is odd.

Note (3) Input signal of even and odd clock should be the same timing.

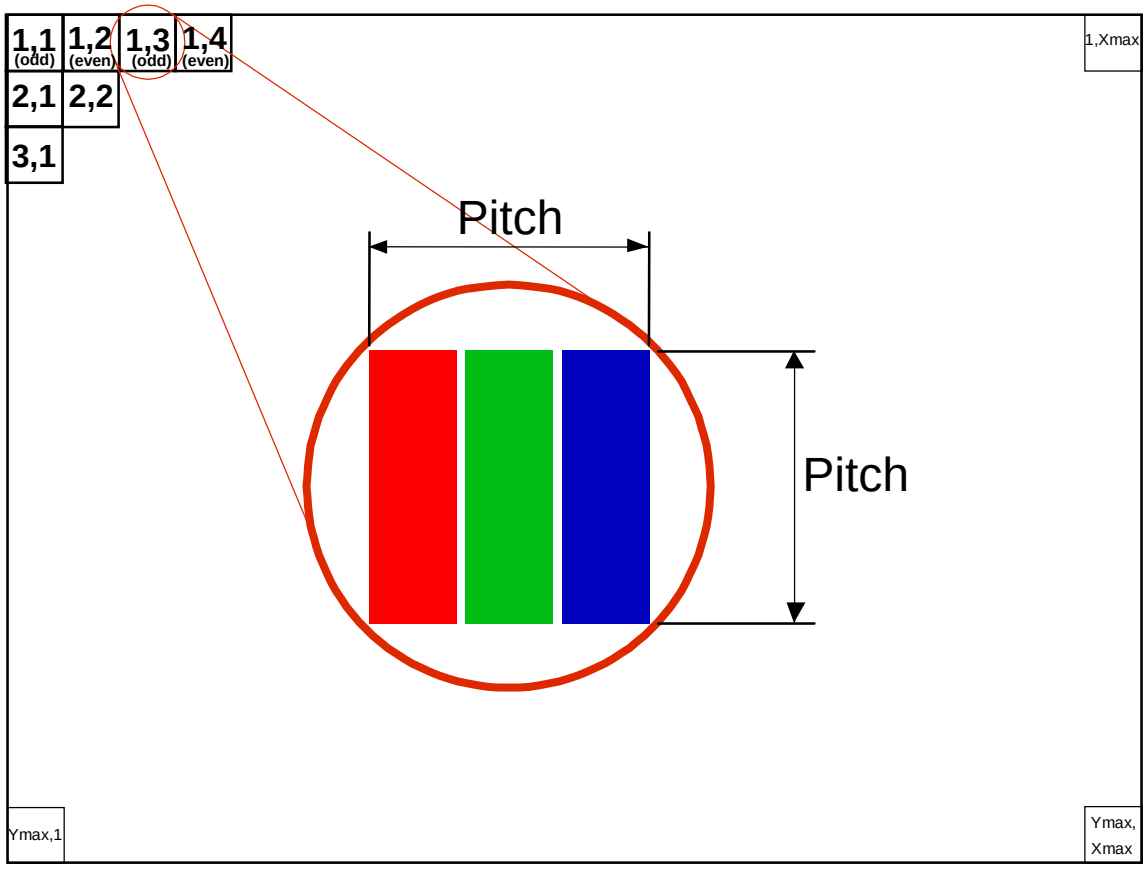




The copyright belongs to InnoLux. Any unauthorized use is prohibited.

Note (4) SELLVDS

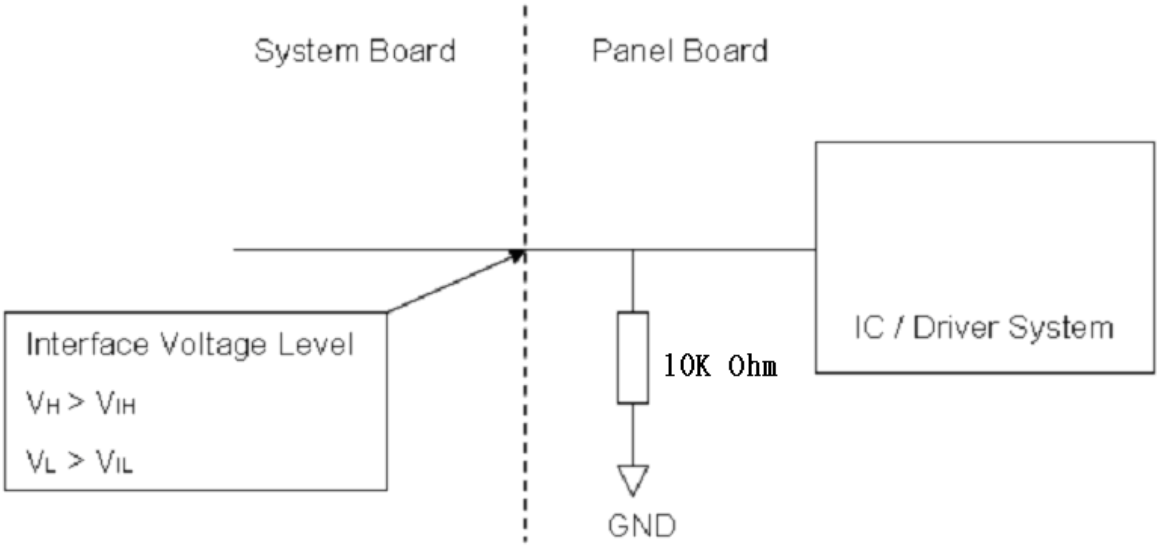


Note (5) Interface connector PIN1 position (PCBA board front view)

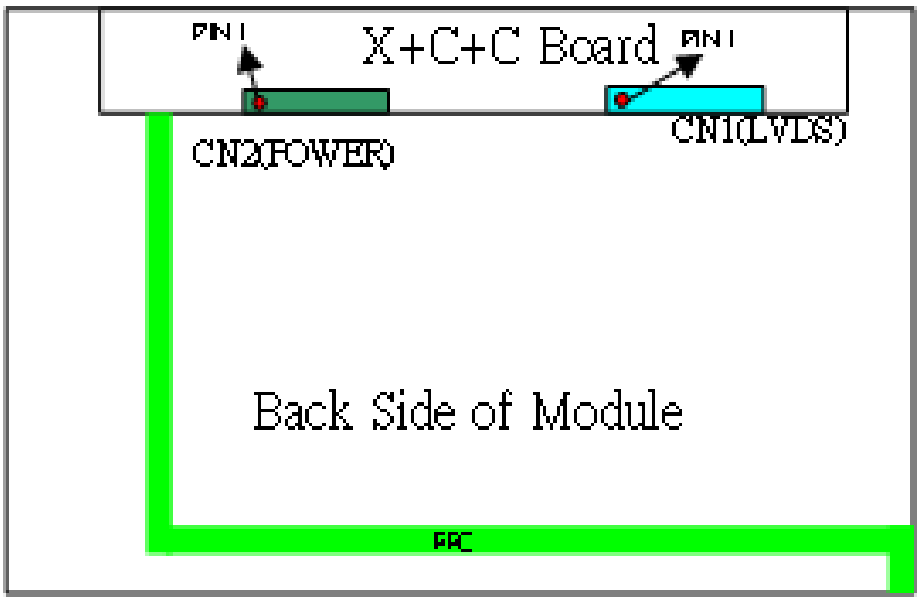




The copyright belongs to InnoLux. Any unauthorized use is prohibited.

## 4.3 ELECTRICAL CHARACTERISTICS

### 4.3.1 LCD ELETRONICS SPECIFICATION

| Parameter | | Symbol | Value | | | Unit | Note |
|---|---|---|---|---|---|---|---|
| | | | Min. | Typ. | Max. | | |
| Power Supply Voltage | | Vcc | 10.8 | 12.0 | 13.2 | V | - |
| Ripple Voltage | | $V_{RP}$ | - | - | 300 | mV | - |
| Rush Current | | $I_{RUSH}$ | - | - | 2.5 | A | (2) |
| Power Supply Current | White | - | - | 0.35 | 0.42 | A | (3)a |
| | Black | | - | 0.26 | 0.32 | A | (3)b |
| | Vertical Stripe | | - | 0.34 | 0.41 | A | (3)c |
| Power Consumption | | PLCD | - | 4.2 | 5.04 | Watt | (4) |
| LVDS differential input voltage | | Vid | 100 | - | 600 | mV | (5) |
| LVDS common input voltage | | $V_{IC}$ | 1.0 | 1.2 | 1.4 | V | - |

Note (1) The ambient temperature is Ta = 25 ± 2 ºC.

Note (2) Measurement Conditions:

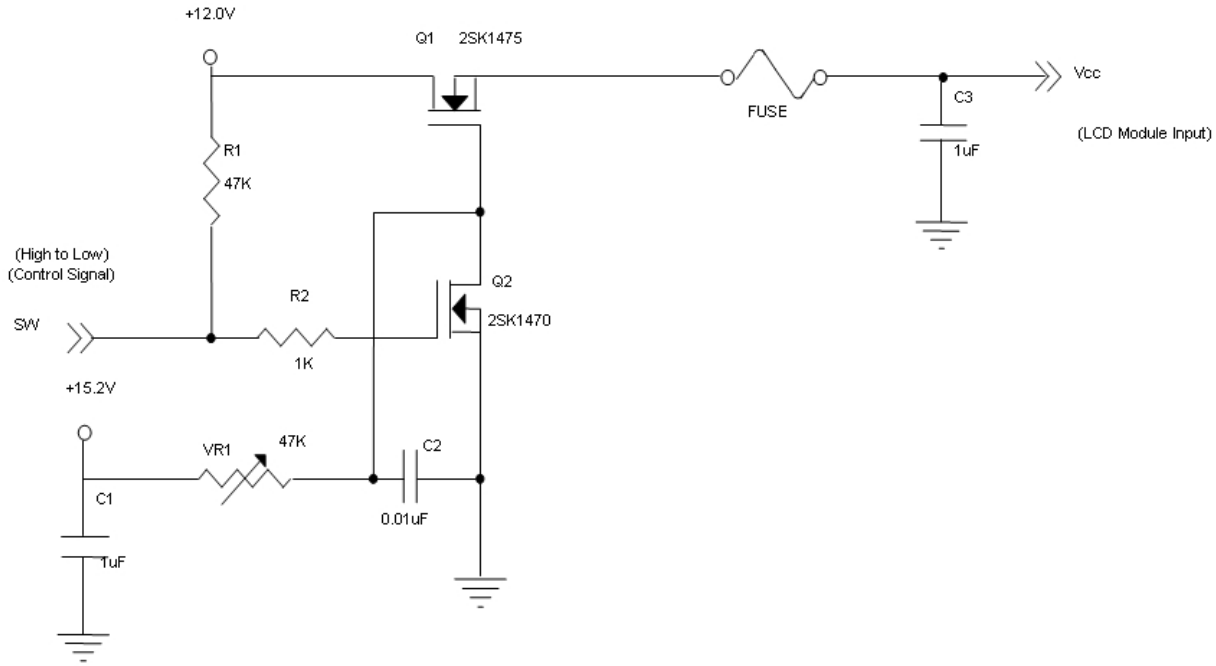


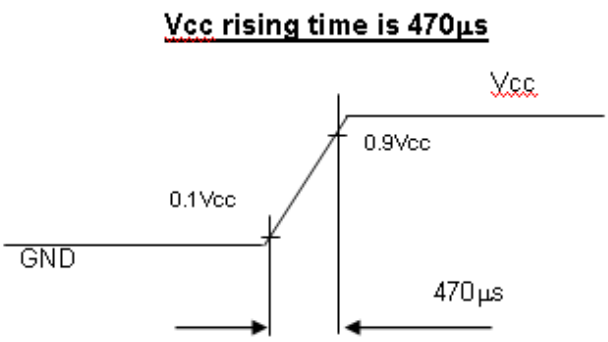




The copyright belongs to InnoLux. Any unauthorized use is prohibited.

Note (3) The specified max power supply current is under the conditions at Vcc = 12.0 V, Ta = 25 ± 2 ºC, Fr = 60Hz, whereas a power dissipation check pattern below is displayed.

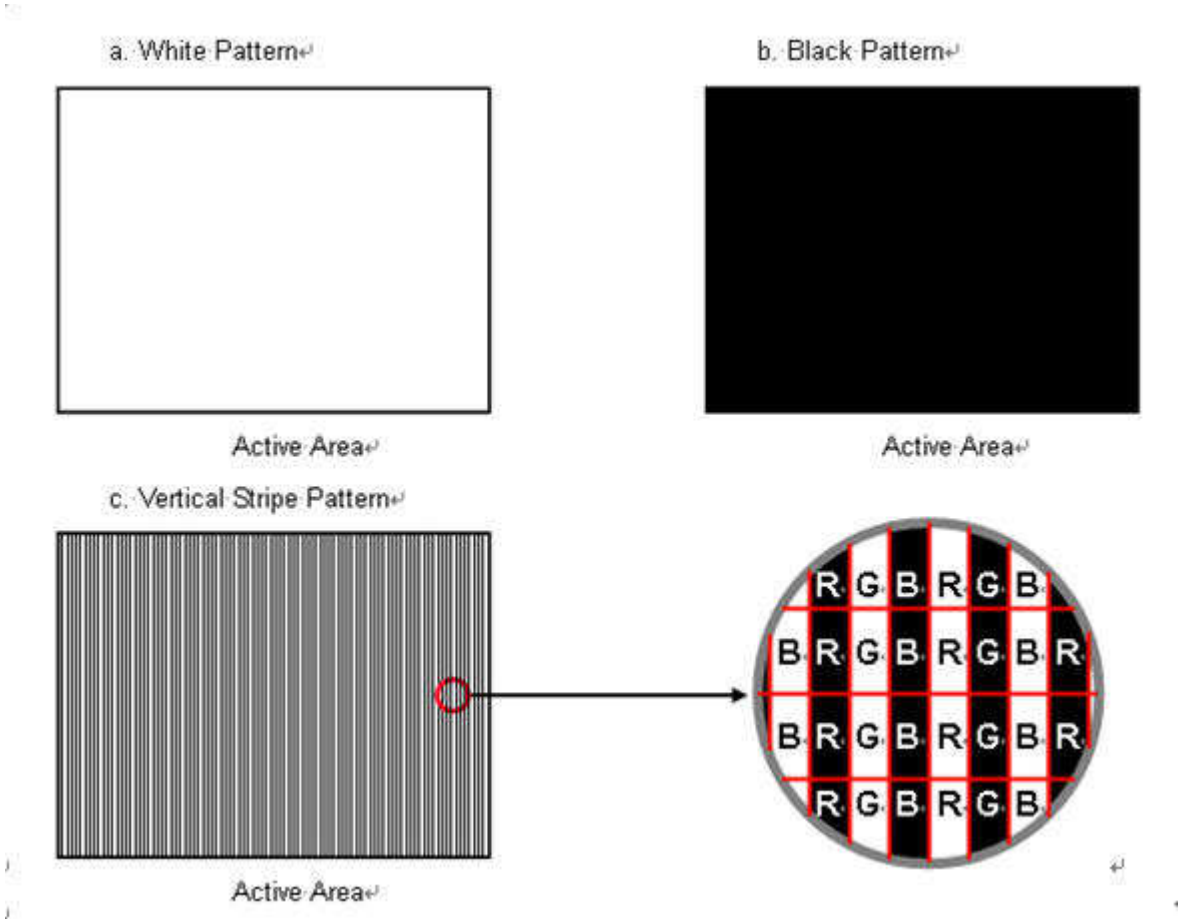


Note (4) The power consumption is specified at the pattern with the maximum current.

Note (5) Vid waveform condition

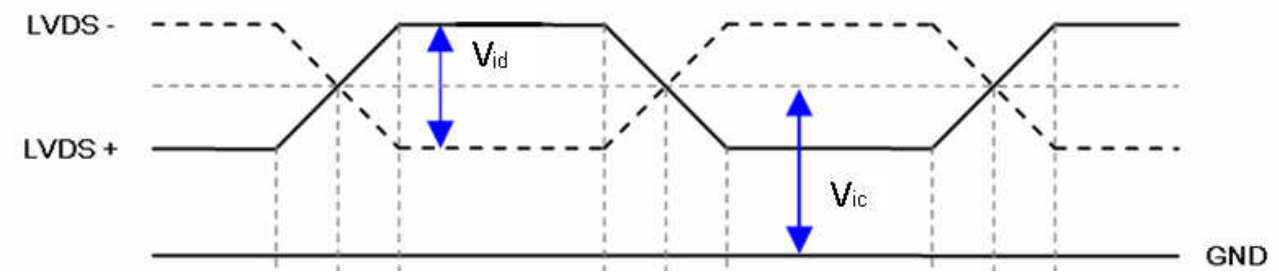




The copyright belongs to InnoLux. Any unauthorized use is prohibited.

### 4.3.2 Vcc Power Dip Condition

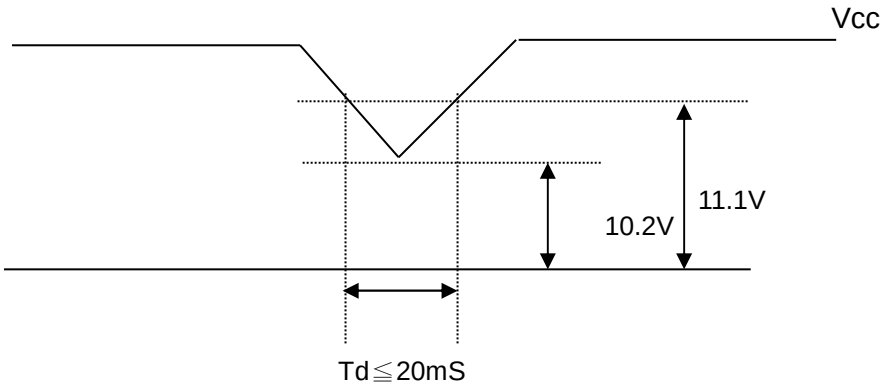


### 4.3.3 CONVERTER ELECTRICAL CHARATERISTICS

Ta = 25 ± 2 ºC

| Parameter | | Symbol | Value | | | Unit | Note |
|---|---|---|---|---|---|---|---|
| | | | Min. | Typ. | Max. | | |
| Converter Power Supply Voltage | | $V_i$ | 10.8 | 12.0 | 13.2 | V | (Duty 100%) |
| Converter Power Supply Current | | $I_i$ | - | 1.93 | 2.06 | A | @ Vi = 12V (Duty 100%) |
| Input Power Consumption | | $P_i$ | - | 23.2 | 24.7 | W | @ Vi = 12V (Duty 100%) |
| BL Control Level | Backlight on | BLON | 2 | 3.3 | 5.0 | V | - |
| | Backlight off | | 0 | 0 | 0.3 | V | - |
| PWM Control Level | PWM High Level | E_PWM | 2 | 3.3 | 5.0 | V | Positive Dimming |
| | PWM Low Level | | 0 | 0 | 0.3 | V | - |
| PWM Control Duty Ratio | | - | 1 | - | 100 | % | - |
| PWM Control Frequency | | $f_{PWM}$ | 100 | 200 | 1K | Hz | - |
| LED Life Time | | LLED | 50,000 | - | - | Hrs | (1) |

Note (1) The lifetime of LED is estimated data and defined as the time when LED packages continue to operate under the conditions at Ta = 25 ±2 ℃ until the brightness becomes ≦ 50% of its original value.



The copyright belongs to InnoLux. Any unauthorized use is prohibited.

Power sequence and control signal timing are shown in the following figure

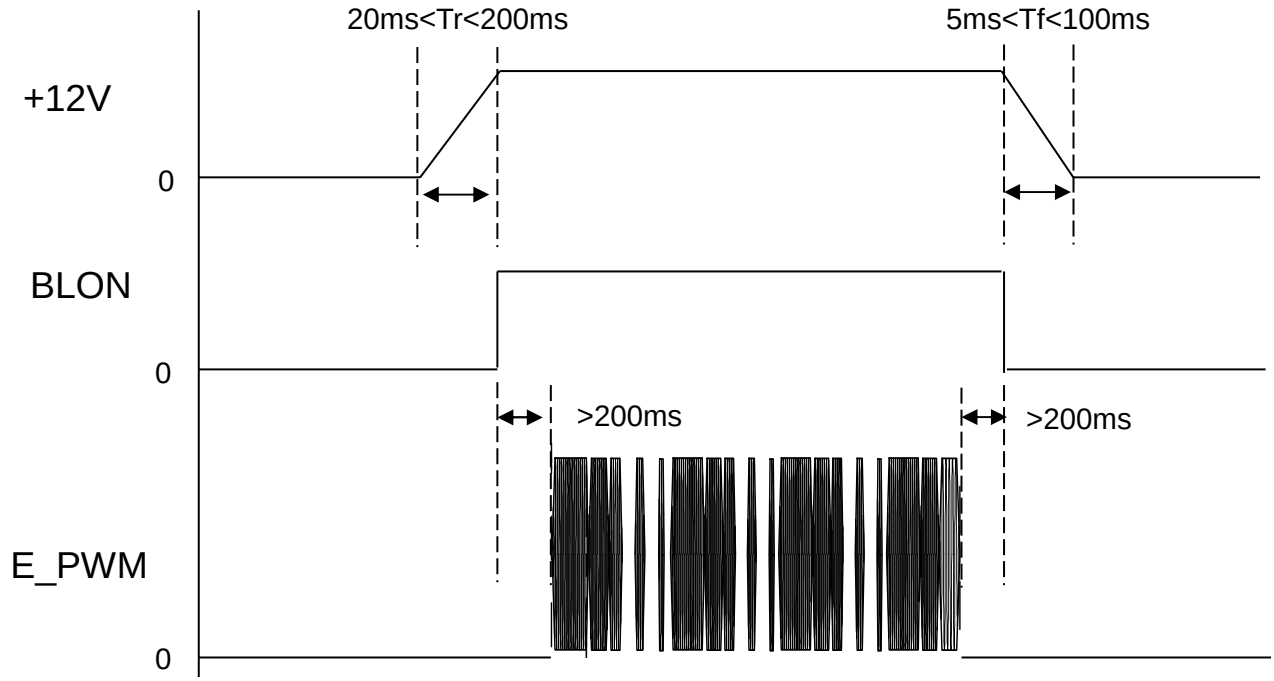


**Note： While system is turned ON or OFF, the power sequences must follow as below descriptions**

**Turn ON sequence: $V_I$(+12V) → BLON → E_PWM signal**

**Turn OFF sequence: E_PWM signal → BLON →$V_I$(+12V)**



The copyright belongs to InnoLux. Any unauthorized use is prohibited.

### 4.3.4 CONVERTER INPUT CONNECTOR PIN ASSIGNMENT(CN2)

| Pin | Symbol | Remark |
|---|---|---|
| 1 | VI | +12 V |
| 2 | | |
| 3 | | |
| 4 | | |
| 5 | | |
| 6 | GND | GND |
| 7 | | |
| 8 | | |
| 9 | | |
| 10 | | |
| 11 | NC | No Connection |
| 12 | BLON | BL ON/OFF (ON:3.3V, OFF:0V) |
| 13 | NC | No Connection |
| 14 | E_PWM | External PWM Control for Positive (Hi Level: TBD V, Low Level: TBD V) |

Connector Part No.: FCN JH2-D4-143N or CviLux CI0114M1HRO-LA-NH or equivalent

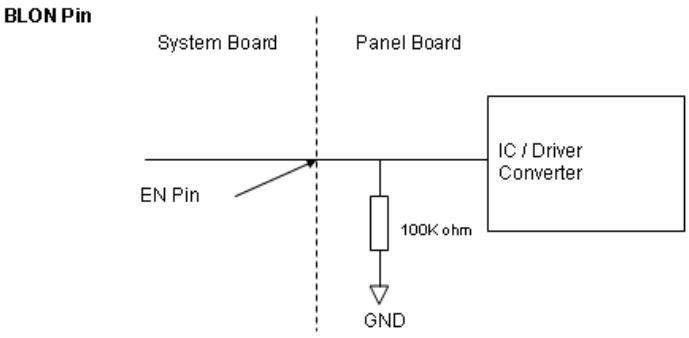


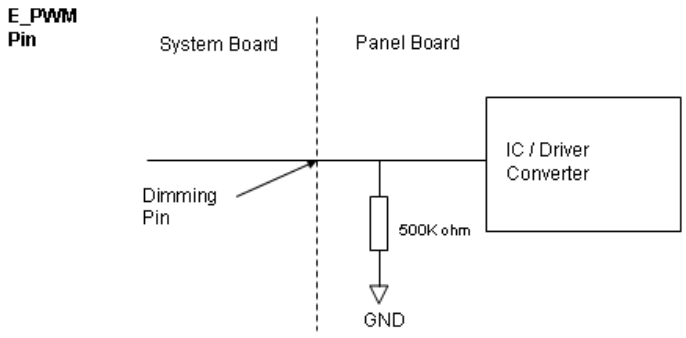




The copyright belongs to InnoLux. Any unauthorized use is prohibited.

## 4.4 LVDS INPUT SIGNAL SPECIFICATIONS

### 4.4.1 LVDS DATA INPUT DATA ORDER (VESA Mode)

| | | | | | | | | |
|---|---|---|---|---|---|---|---|---|
| LVDS Channel O0 | LVDS output | D7 | D6 | D4 | D3 | D2 | D1 | D0 |
| | Data order | OG0 | OR5 | OR4 | OR3 | OR2 | OR1 | OR0 |
| LVDS Channel O1 | LVDS output | D18 | D15 | D14 | D13 | D12 | D9 | D8 |
| | Data order | OB1 | OB0 | OG5 | OG4 | OG3 | OG2 | OG1 |
| LVDS Channel O2 | LVDS output | D26 | D25 | D24 | D22 | D21 | D20 | D19 |
| | Data order | DE | NA | NA | OB5 | OB4 | OB3 | OB2 |
| LVDS Channel O3 | LVDS output | D23 | D17 | D16 | D11 | D10 | D5 | D27 |
| | Data order | NA | OB7 | OB6 | OG7 | OG6 | OR7 | OR6 |
| LVDS Channel E0 | LVDS output | D7 | D6 | D4 | D3 | D2 | D1 | D0 |
| | Data order | EG0 | ER5 | ER4 | ER3 | ER2 | ER1 | ER0 |
| LVDS Channel E1 | LVDS output | D18 | D15 | D14 | D13 | D12 | D9 | D8 |
| | Data order | EB1 | EB0 | EG5 | EG4 | EG3 | EG2 | EG1 |
| LVDS Channel E2 | LVDS output | D26 | D25 | D24 | D22 | D21 | D20 | D19 |
| | Data order | DE | NA | NA | EB5 | EB4 | EB3 | EB2 |
| LVDS Channel E3 | LVDS output | D23 | D17 | D16 | D11 | D10 | D5 | D27 |
| | Data order | NA | EB7 | EB6 | EG7 | EG6 | ER7 | ER6 |

### 4.4.2 LVDS DATA INPUT DAT ORDER (JEIDA Mode)

| | | | | | | | | |
|---|---|---|---|---|---|---|---|---|
| LVDS Channel O0 | LVDS output | D7 | D6 | D4 | D3 | D2 | D1 | D0 |
| | Data order | OG2 | OR7 | OR6 | OR5 | OR4 | OR3 | OR2 |
| LVDS Channel O1 | LVDS output | D18 | D15 | D14 | D13 | D12 | D9 | D8 |
| | Data order | OB3 | OB2 | OG7 | OG6 | OG5 | OG4 | OG3 |
| LVDS Channel O2 | LVDS output | D26 | D25 | D24 | D22 | D21 | D20 | D19 |
| | Data order | DE | NA | NA | OB7 | OB6 | OB5 | OB4 |
| LVDS Channel O3 | LVDS output | D23 | D17 | D16 | D11 | D10 | D5 | D27 |
| | Data order | NA | OB1 | OB0 | OG1 | OG0 | OR1 | OR0 |
| LVDS Channel E0 | LVDS output | D7 | D6 | D4 | D3 | D2 | D1 | D0 |
| | Data order | EG2 | ER7 | ER6 | ER5 | ER4 | ER3 | ER2 |
| LVDS Channel E1 | LVDS output | D18 | D15 | D14 | D13 | D12 | D9 | D8 |
| | Data order | EB3 | EB2 | EG7 | EG6 | EG5 | EG4 | EG3 |
| LVDS Channel E2 | LVDS output | D26 | D25 | D24 | D22 | D21 | D20 | D19 |
| | Data order | DE | NA | NA | EB7 | EB6 | EB5 | EB4 |
| LVDS Channel E3 | LVDS output | D23 | D17 | D16 | D11 | D10 | D5 | D27 |
| | Data order | NA | EB1 | EB0 | EG1 | EG0 | ER1 | ER0 |

Note: Because this module is operated by DE only mode, Hsync and Vsync input signals should be set to low logic level or ground. Otherwise, this module would operate abnormally.



The copyright belongs to InnoLux. Any unauthorized use is prohibited.

### 4.4.3 COLOR DATA INPUT ASSIGNMENT

The brightness of each primary color (red, green and blue) is based on the 8-bit gray scale data input for the color. The higher the binary input, the brighter the color. The table below provides the assignment of color versus data input.

| Color | | Data Signal | | | | | | | | | | | | | | | | | | | | | | | |
|---|---|---|---|---|---|---|---|---|---|---|---|---|---|---|---|---|---|---|---|---|---|---|---|---|---|
| | | Red | | | | | | | | Green | | | | | | | | Blue | | | | | | | |
| | | R7 | R6 | R5 | R4 | R3 | R2 | R1 | R0 | G7 | G6 | G5 | G4 | G3 | G2 | G1 | G0 | B7 | B6 | B5 | B4 | B3 | B2 | B1 | B0 |
| Basic Colors | Black | 0 | 0 | 0 | 0 | 0 | 0 | 0 | 0 | 0 | 0 | 0 | 0 | 0 | 0 | 0 | 0 | 0 | 0 | 0 | 0 | 0 | 0 | 0 | 0 |
| | Red | 1 | 1 | 1 | 1 | 1 | 1 | 1 | 1 | 0 | 0 | 0 | 0 | 0 | 0 | 0 | 0 | 0 | 0 | 0 | 0 | 0 | 0 | 0 | 0 |
| | Green | 0 | 0 | 0 | 0 | 0 | 0 | 0 | 0 | 1 | 1 | 1 | 1 | 1 | 1 | 1 | 1 | 0 | 0 | 0 | 0 | 0 | 0 | 0 | 0 |
| | Blue | 0 | 0 | 0 | 0 | 0 | 0 | 0 | 0 | 0 | 0 | 0 | 0 | 0 | 0 | 0 | 0 | 1 | 1 | 1 | 1 | 1 | 1 | 1 | 1 |
| | Cyan | 0 | 0 | 0 | 0 | 0 | 0 | 0 | 0 | 1 | 1 | 1 | 1 | 1 | 1 | 1 | 1 | 1 | 1 | 1 | 1 | 1 | 1 | 1 | 1 |
| | Magenta | 1 | 1 | 1 | 1 | 1 | 1 | 1 | 1 | 0 | 0 | 0 | 0 | 0 | 0 | 0 | 0 | 1 | 1 | 1 | 1 | 1 | 1 | 1 | 1 |
| | Yellow | 1 | 1 | 1 | 1 | 1 | 1 | 1 | 1 | 1 | 1 | 1 | 1 | 1 | 1 | 1 | 1 | 0 | 0 | 0 | 0 | 0 | 0 | 0 | 0 |
| | White | 1 | 1 | 1 | 1 | 1 | 1 | 1 | 1 | 1 | 1 | 1 | 1 | 1 | 1 | 1 | 1 | 1 | 1 | 1 | 1 | 1 | 1 | 1 | 1 |
| Gray Scale Of Red | Red(0) / Dark | 0 | 0 | 0 | 0 | 0 | 0 | 0 | 0 | 0 | 0 | 0 | 0 | 0 | 0 | 0 | 0 | 0 | 0 | 0 | 0 | 0 | 0 | 0 | 0 |
| | Red(1) | 0 | 0 | 0 | 0 | 0 | 0 | 0 | 1 | 0 | 0 | 0 | 0 | 0 | 0 | 0 | 0 | 0 | 0 | 0 | 0 | 0 | 0 | 0 | 0 |
| | Red(2) | 0 | 0 | 0 | 0 | 0 | 0 | 1 | 0 | 0 | 0 | 0 | 0 | 0 | 0 | 0 | 0 | 0 | 0 | 0 | 0 | 0 | 0 | 0 | 0 |
| | : | : | : | : | : | : | : | : | : | : | : | : | : | : | : | : | : | : | : | : | : | : | : | : | : |
| | : | : | : | : | : | : | | : | | : | | : | | : | : | : | | | : | | : | : | : | : | |
| | Red(253) | 1 | 1 | 1 | 1 | 1 | 1 | 0 | 1 | 0 | 0 | 0 | :0 | 0 | 0 | 0 | 0 | 0 | 0 | 0 | 0 | 0 | 0 | 0 | :0 |
| | Red(254) | 1 | 1 | 1 | 1 | 1 | 1 | 1 | 0 | 0 | 0 | 0 | 0 | 0 | 0 | 0 | 0 | 0 | 0 | 0 | 0 | 0 | 0 | 0 | 0 |
| | Red(255) | 1 | 1 | 1 | 1 | 1 | 1 | 1 | 1 | 0 | 0 | 0 | 0 | 0 | 0 | 0 | 0 | 0 | 0 | 0 | 0 | 0 | 0 | 0 | 0 |
| Gray Scale Of Green | Green(0) / Dark | 0 | 0 | 0 | 0 | 0 | 0 | 0 | 0 | 0 | 0 | 0 | 0 | 0 | 0 | 0 | 0 | 0 | 0 | 0 | 0 | 0 | 0 | 0 | 0 |
| | Green(1) | 0 | 0 | 0 | 0 | 0 | 0 | 0 | 0 | 0 | 0 | 0 | 0 | 0 | 0 | 0 | 1 | 0 | 0 | 0 | 0 | 0 | 0 | 0 | 0 |
| | Green(2) | 0 | 0 | 0 | 0 | 0 | 0 | 0 | 0 | 0 | 0 | 0 | 0 | 0 | 0 | 1 | 0 | 0 | 0 | 0 | 0 | 0 | 0 | 0 | 0 |
| | : | : | : | : | : | : | : | : | : | : | : | : | : | : | : | : | : | : | : | : | : | : | : | : | : |
| | : | : | : | : | : | : | : | : | : | : | : | : | : | : | : | : | : | : | : | : | : | : | : | : | : |
| | Green(253) | 0 | 0 | 0 | 0 | 0 | 0 | 0 | 0 | 1 | 1 | 1 | 1 | 1 | 1 | 0 | 1 | 0 | 0 | 0 | 0 | 0 | 0 | 0 | 0 |
| | Green(254) | 0 | 0 | 0 | 0 | 0 | 0 | 0 | 0 | 1 | 1 | 1 | 1 | 1 | 1 | 1 | 0 | 0 | 0 | 0 | 0 | 0 | 0 | 0 | 0 |
| | Green(255) | 0 | 0 | 0 | 0 | 0 | 0 | 0 | 0 | 1 | 1 | 1 | 1 | 1 | 1 | 1 | 1 | 0 | 0 | 0 | 0 | 0 | 0 | 0 | 0 |
| Gray Scale Of Blue | Blue(0) / Dark | 0 | 0 | 0 | 0 | 0 | 0 | 0 | 0 | 0 | 0 | 0 | 0 | 0 | 0 | 0 | 0 | 0 | 0 | 0 | 0 | 0 | 0 | 0 | 0 |
| | Blue(1) | 0 | 0 | 0 | 0 | 0 | 0 | 0 | 0 | 0 | 0 | 0 | 0 | 0 | 0 | 0 | 0 | 0 | 0 | 0 | 0 | 0 | 0 | 0 | 1 |
| | Blue(2) | 0 | 0 | 0 | 0 | 0 | 0 | 0 | 0 | 0 | 0 | 0 | 0 | 0 | 0 | 0 | 0 | 0 | 0 | 0 | 0 | 0 | 0 | 1 | 0 |
| | : | : | : | : | : | : | : | : | : | : | : | : | : | : | : | : | : | : | : | : | : | : | : | : | : |
| | : | : | : | : | : | : | : | : | : | : | : | : | : | : | : | : | : | : | : | : | : | : | : | : | : |
| | Blue(253) | 0 | 0 | 0 | 0 | 0 | 0 | 0 | 0 | 0 | 0 | 0 | 0 | 0 | 0 | 0 | 0 | 1 | 1 | 1 | 1 | 1 | 1 | 0 | 1 |
| | Blue(254) | 0 | 0 | 0 | 0 | 0 | 0 | 0 | 0 | 0 | 0 | 0 | 0 | 0 | 0 | 0 | 0 | 1 | 1 | 1 | 1 | 1 | 1 | 1 | 0 |
| | Blue(255) | 0 | 0 | 0 | 0 | 0 | 0 | 0 | 0 | 0 | 0 | 0 | 0 | 0 | 0 | 0 | 0 | 1 | 1 | 1 | 1 | 1 | 1 | 1 | 1 |

Note (1) 0: Low Level Voltage, 1: High Level Voltage



The copyright belongs to InnoLux. Any unauthorized use is prohibited.

## 4.5 DISPLAY TIMING SPECIFICATIONS

The input signal timing specifications are shown as the following table and timing diagram.

| Signal | Item | Symbol | Min. | Typ. | Max. | Unit | Note |
|---|---|---|---|---|---|---|---|
| LVDS Clock | Frequency | Fc | 70 | 74.8 | 80.0 | MHz | (4) |
| | Period | Tc | 14.3 | 13.36 | 12.5 | ns | - |
| | Input cycle to cycle jitter | $T_{rcl}$ | Tc-0.2 | - | Tc+0.2 | ns | (1) |
| | Input Clock to data skew | TLVCCS | - | - | 280 | ps | (2) |
| | Spread spectrum modulation range | $F_{clkin\_mod}$ | 0.98*Fc | - | 1.02*Fc | MHz | (3) |
| | Spread spectrum modulation frequency | $F_{SSM}$ | - | - | 200 | KHz | |
| Vertical Display Term | Frame Rate | Fr | - | 60 | - | Hz | Tv=Tvd+Tvb |
| | Total | Tv | 1216 | 1235 | 1250 | Th | (5) |
| | Active Display | Tvd | 1200 | 1200 | 1200 | Th | - |
| | Blank | Tvb | 16 | 35 | 50 | Th | - |
| Horizontal Display Term | Total | Th | 960 | 1010 | 1066 | Tc | Th=Thd+Thb |
| | Active Display | Thd | 800 | 800 | 800 | Tc | - |
| | Blank | Thb | 160 | 210 | 266 | Tc | - |

Note : Because this module is operated by DE only mode, Hsync and Vsync input signals are ignored.

INPUT SIGNAL TIMING DIAGRAM

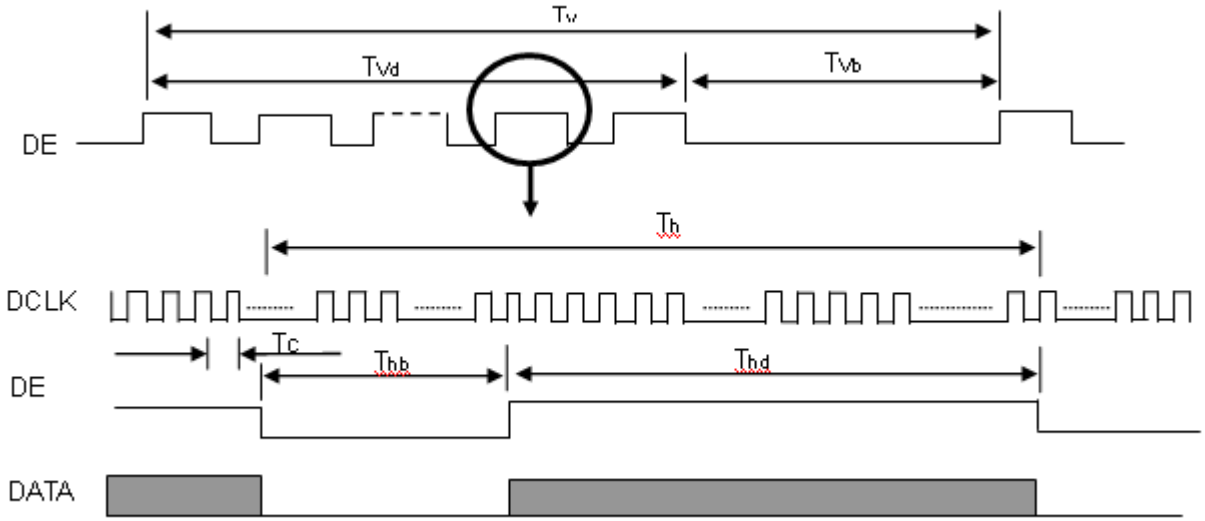




The copyright belongs to InnoLux. Any unauthorized use is prohibited.

Note (1) The input clock cycle-to-cycle jitter is defined as below figures. Trcl = I $T_1$ – TI

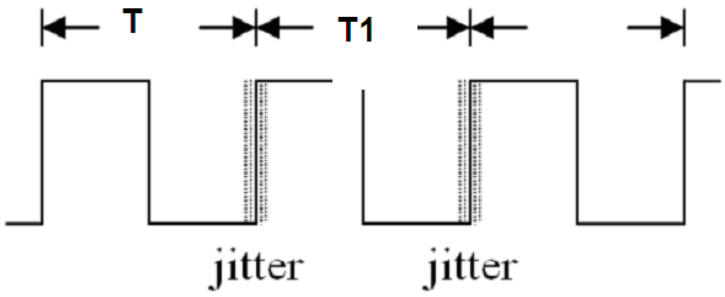


Note (2) Input Clock to data skew is defined as below figures.

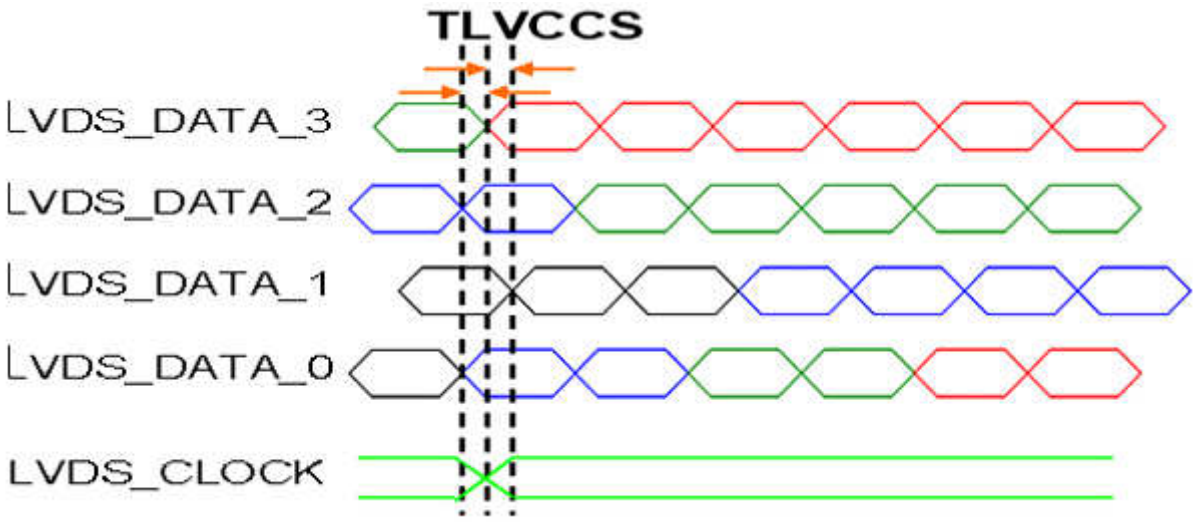


Note (3) The SSCG (Spread spectrum clock generator) is defined as below figures.

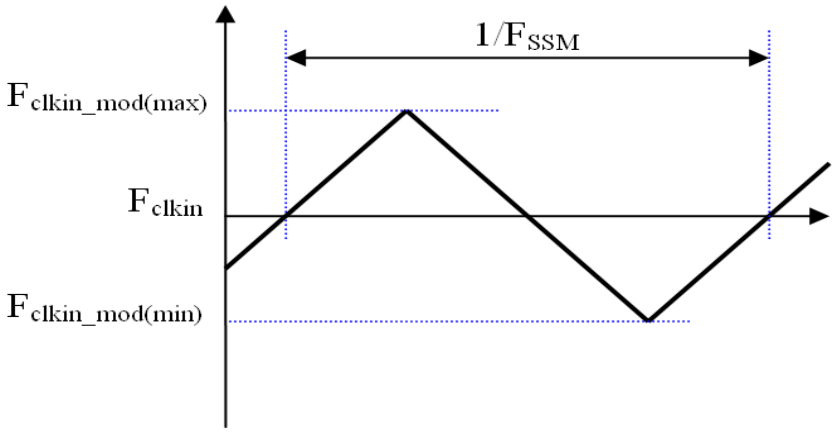


Note (4) Please make sure the range of pixel clock has to follow the below equation:

Fclkin(max) ≧ Fr X Tv X Th

Fr X Tv X Th ≧ Fclkin(min)

Note (5) The Tv(Tvd+Tvb) must be integer, otherwise, the module would operate abnormally.



The copyright belongs to InnoLux. Any unauthorized use is prohibited.

## 4.6 POWER ON/OFF SEQUENCE

The power sequence specifications are shown as the following table and diagram.

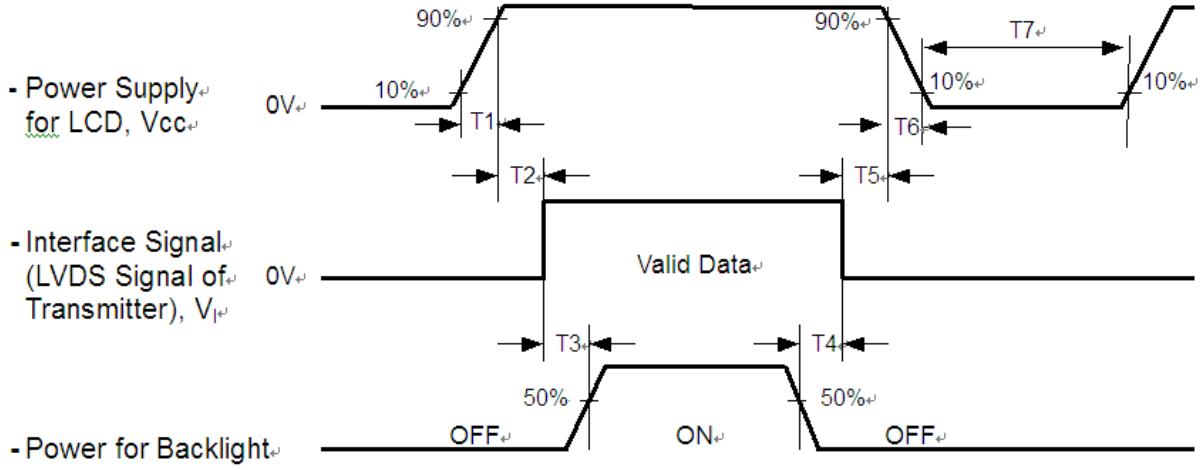


Timing Specifications:

| Parameters | Values | | | Units |
|---|---|---|---|---|
| | Min | Typ. | Max | |
| T1 | 0.5 | - | 10 | ms |
| T2 | 0 | 30 | 50 | ms |
| T3 | 200 | 250 | - | ms |
| T4 | 100 | 250 | - | ms |
| T5 | 0 | 20 | 50 | ms |
| T6 | 0.1 | - | 100 | ms |
| T7 | 1000 | - | - | ms |

Note (1) The supply voltage of the external system for the module input should be the same as the definition of Vcc.

Note (2) When the backlight turns on before the LCD operation of the LCD turns off, the display may momentarily become abnormal screen.

Note (3) In case of VCC = off level, please keep the level of input signals on the low or keep a high impedance.

Note (4) T7 should be measured after the module has been fully discharged between power off and on period.

Note (5) Interface signal shall not be kept at high impedance when the power is on.

Note (6) INX won't take any responsibility for the products which are damaged by the customers not following the Power Sequence.

Note (7) There might be slight electronic noise when LCD is turned off (even backlight unit is also off). To avoid this symptom, we suggest "Vcc falling timing" to follow "t6 spec".



The copyright belongs to InnoLux. Any unauthorized use is prohibited.

# 5. OPTICAL CHARACTERISTICS

## 5.1 TEST CONDITIONS

| Item | Value | Unit |
|---|---|---|
| Ambient Temperature (Ta) | 25±2 | °C |
| Ambient Humidity (Ha) | 50±10 | %RH |
| Supply Voltage | According to typical value in "ELECTRICAL CHARACTERISTICS" | |
| Input Signal | | |
| LED Light Bar Input Current Per Input Pin | | |

## 5.2 OPTICAL SPECIFICATIONS

The relative measurement methods of optical characteristics are shown in 5.2 and all items are measured at the center point of screen except white variation. The following items should be measured under the test conditions described in 5.1 and stable environment shown in Note (5)

| Item | | Symbol | Condition | Min. | Typ. | Max. | Unit | Note |
|---|---|---|---|---|---|---|---|---|
| Color Chromaticity (CIE 1931) | White | $W_x$ | $\theta_x$=0°, $\theta_Y$ =0° CS-2000T | Typ. -0.03 | 0.308 | Typ. +0.03 | - | (1), (5) |
| | | $W_y$ | | | 0.329 | | | |
| | Red | $R_x$ | | | 0.644 | | | |
| | | $R_y$ | | | 0.341 | | | |
| | Green | $G_x$ | | | 0.318 | | | |
| | | $G_y$ | | | 0.611 | | | |
| | Blue | $B_x$ | | | 0.155 | | | |
| | | $B_y$ | | | 0.047 | | | |
| Center Luminance of White | | $L_C$ | | 400 | 500 | - | cd/m$^2$ | (4), (5) |
| Contrast Ratio | | CR | | 1440 | 1800 | - | - | (2), (5) |
| Response Time | | $T_R$ | $\theta_x$=0°, $\theta_Y$ =0° | - | 8 | 15 | ms | (3) |
| | | $T_F$ | | - | 8 | 15 | ms | |
| White Variation(adjacent) | | $\delta W_a$ | $\theta_x$=0°, $\theta_Y$ =0° USB2000 | 80 | - | - | - | (5), (6) |
| White Variation(total) | | $\delta W_t$ | $\theta_x$=0°, $\theta_Y$ =0° USB2000 | 70 | - | - | - | (5), (6) |
| Viewing Angle | | $\Theta_{y+}$ | CR ≧ 10 USB2000 | 80 | 89 | - | Deg. | (1), (5) |
| | | $\Theta_{y-}$ | | | | | | |
| | | $\Theta_{x+}$ | | | | | | |
| | | $\Theta_{x-}$ | | | | | | |



The copyright belongs to InnoLux. Any unauthorized use is prohibited.

Note (1) Definition of Viewing Angle (θx, θy):

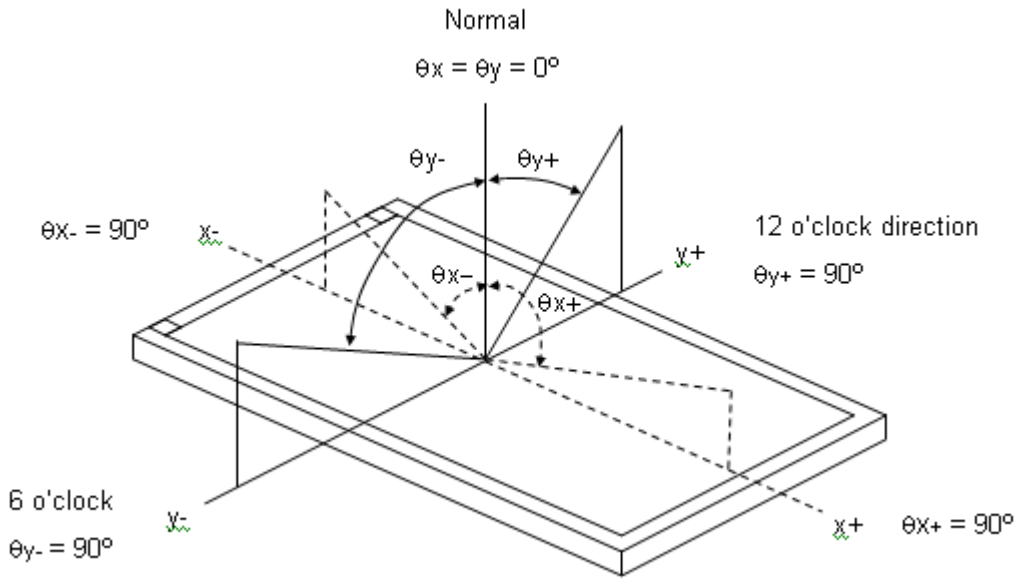


Note (2) Definition of Contrast Ratio (CR):

The contrast ratio can be calculated by the following expression.

Contrast Ratio (CR) = L255 / L0

L255: Luminance of gray level 255

L 0: Luminance of gray level 0

CR = CR (5)

CR (X) is corresponding to the Contrast Ratio of the point X at Figure in Note (4)

Note (3) Definition of Response Time ($T_R$, $T_F$):

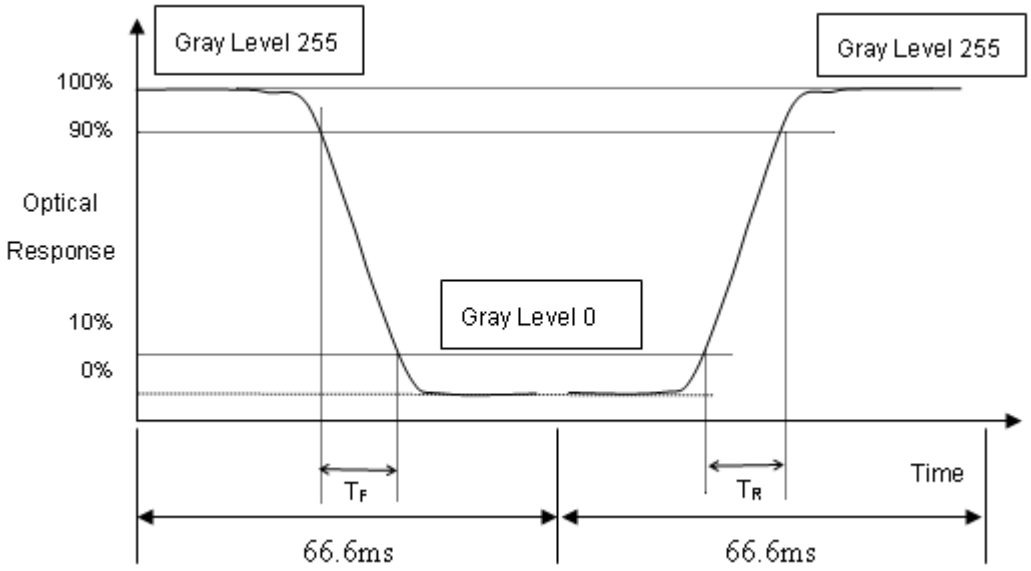




The copyright belongs to InnoLux. Any unauthorized use is prohibited.

Note (4) Definition of Luminance of White ($L_C$):

Measure the luminance of gray level 255 at center point

$L_C = L(5)$

L (x) is corresponding to the luminance of the point X at the following figure.

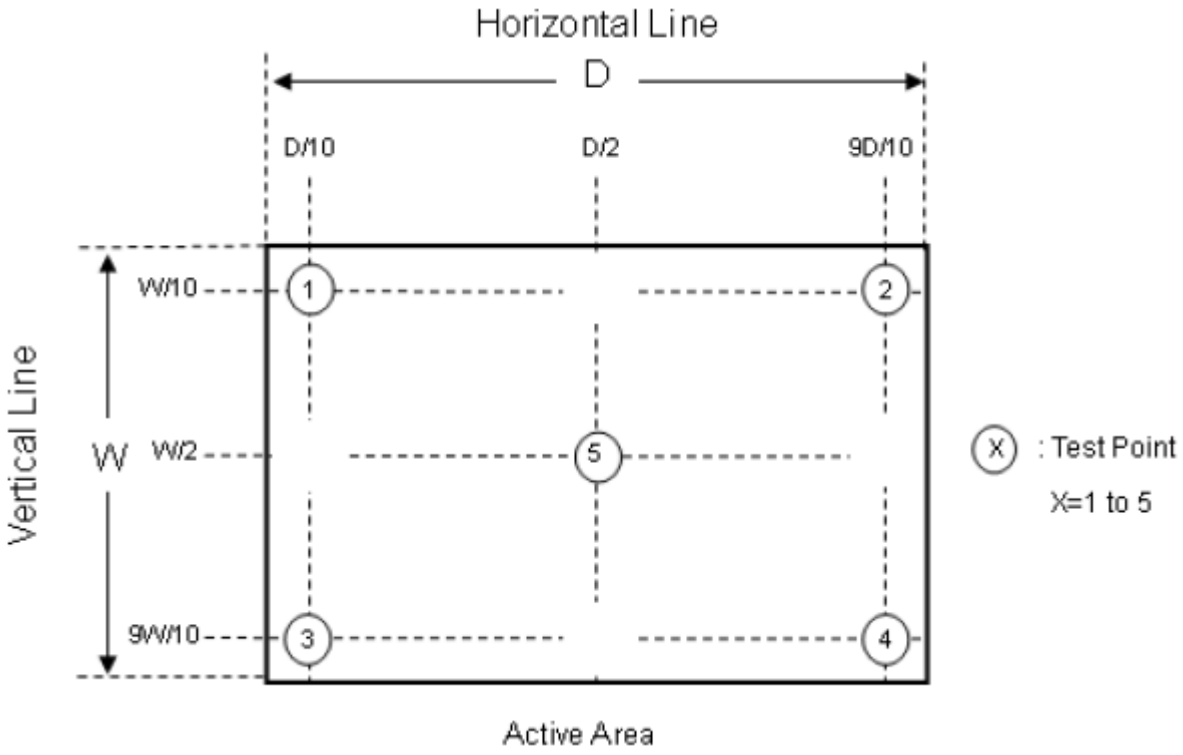


Note (5) Measurement Setup:

The LCD module should be stabilized at given temperature for 60 minutes to avoid abrupt temperature change during measuring. In order to stabilize the luminance, the measurement should be executed after lighting Backlight for 60 minutes in a windless room.

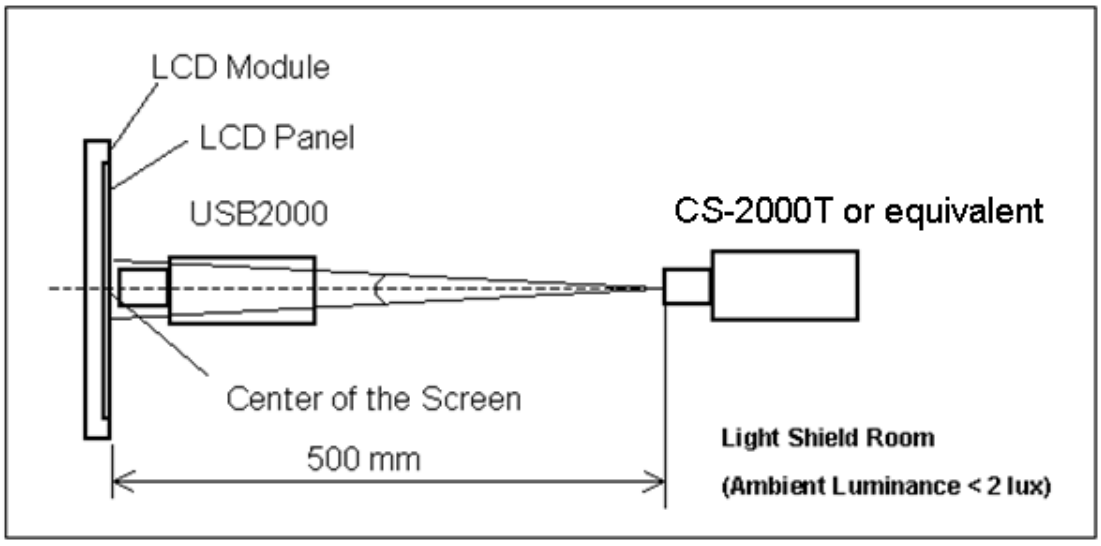




The copyright belongs to InnoLux. Any unauthorized use is prohibited.

Note (6) There is the Uniformity Measurement below:

'$L_{bright}$ ' represents the Luminance of the point that is brighter than the other point to be compared.

'$L_{dark}$ ' represents the Luminance of the point that is darker than the other point to be compared.

Measuring points are shown in the following Fig.

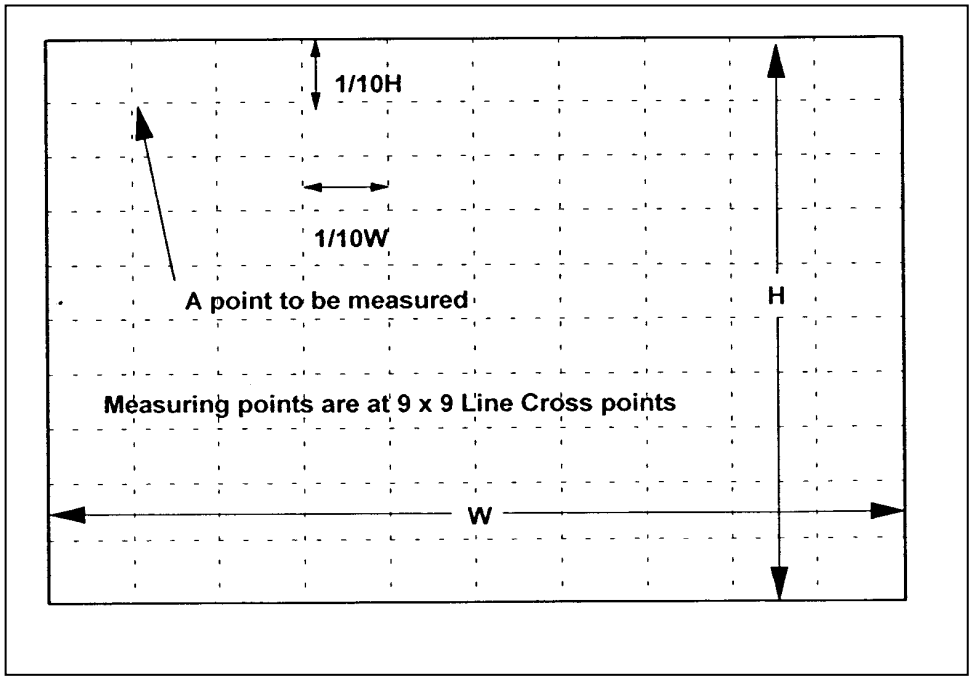


When the backlight is on with all pixels in the white (maximum gray) level, the luminance uniformity is defined as follows;

Where:

$L_{bright}$: The luminance of the brightest part of the area

$L_{dark}$: The luminance of the darkest part of the area

**1. Adjacent Area**

$$\text{Luminance Uniformity} = \frac{L_{dark}}{L_{bright}} \geqq 0.80$$

over a circular area of 10mm diameter placed anywhere on the screen.

**2. Screen Total**

$$\text{Luminance Uniformity} = \frac{L_{dark}}{L_{bright}} \geqq 0.70$$

over the entire screen.



The copyright belongs to InnoLux. Any unauthorized use is prohibited.

## 6. RELIABILITY TEST ITEM

| Items | Required Condition | Note |
|---|---|---|
| Temperature Humidity Bias (THB) | Ta= 50℃, 80%RH, 240hours | (1)(2) |
| High Temperature Operation (HTO) | Ta= 50℃, 240hours | (1)(2) |
| Low Temperature Operation (LTO) | Ta= 0℃, 240hours | (1)(2) |
| High Temperature Storage (HTS) | Ta= 60℃, 240hours | (1)(2) |
| Low Temperature Storage (LTS) | Ta= -20℃, 240hours | (1)(2) |
| Vibration Test (Non-operation) | Acceleration: 1.5 G<br>Wave:sine<br>Frequency: 10 - 300 Hz<br>Sweep: 30 Minutes each Axis (X, Y, Z) | (1)(3) |
| Shock Test (Non-operation) | Acceleration: 50 G<br>Wave: Half-sine<br>Active Time: 11 ms<br>Direction : ± X, ± Y, ± Z.(one time for each Axis) | (1)(3) |
| Thermal Shock Test (TST) | -20℃/30min , 60 ℃/ 30min , 100 cycles | (1)(2) |
| On/Off Test | 25℃ ,On/10sec , Off /10sec , 30,000 cycles | (1) |
| ESD (Electro Static Discharge) | Contact Discharge: ± 8KV, 150pF(330Ω) | (1) |
| | Air Discharge: ± 15KV, 150pF(330Ω) | (1) |
| Altitude Test | Operation:10,000 ft / 24hours<br>Non-Operation:30,000 ft / 24hours | (1)(2) |

Note (1) Criteria : Normal display image with no obvious non-uniformity and no line defect.

Note (2) Evaluation should be tested after storage at room temperature for more than two hour

Note (3) At testing Vibration and Shock, the fixture in holding the module has to be hard and rigid enough so that the module would not be twisted or bent by the fixture.

The fixing condition is shown as below:

At room temperature

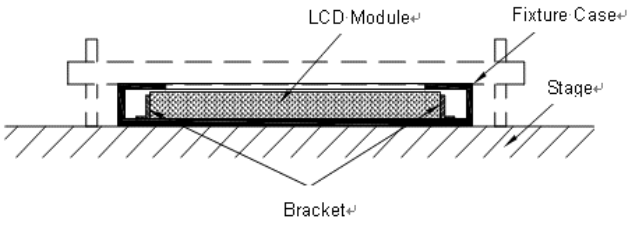




The copyright belongs to InnoLux. Any unauthorized use is prohibited.

# 7. PACKING

## 7.1 PACKING SPECIFICATIONS

(1) 5 LCD modules / 1 Box

(2) Box dimensions: 532(L) * 283(W) * 488(H) mm

(3) Weight: approximately: (13.7) kg (5 modules per box)

## 7.2 PACKING METHOD

Packaging method is shown as following figures.

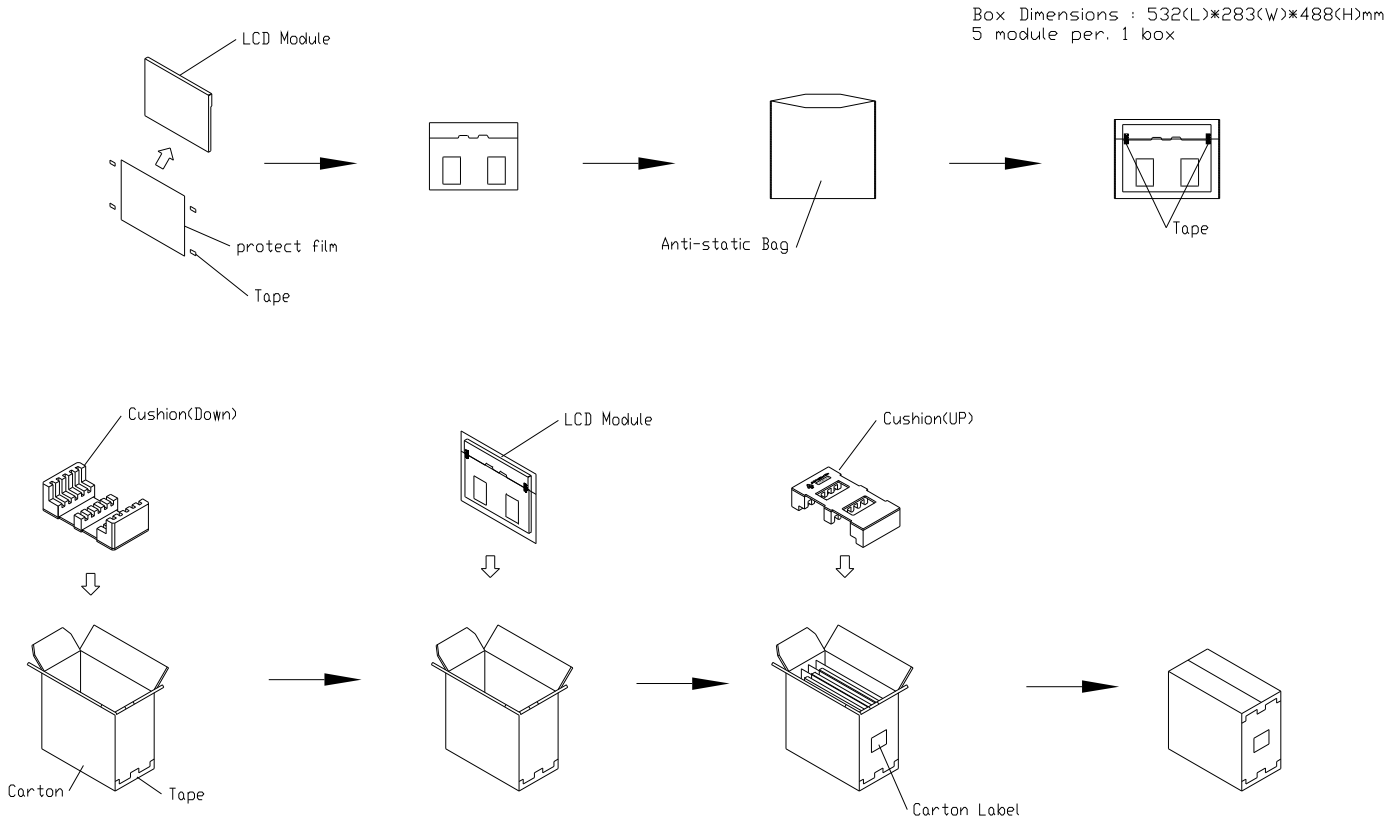


**Figure. 7-1 Packing method**



The copyright belongs to InnoLux. Any unauthorized use is prohibited.

## 7.3 PALLET

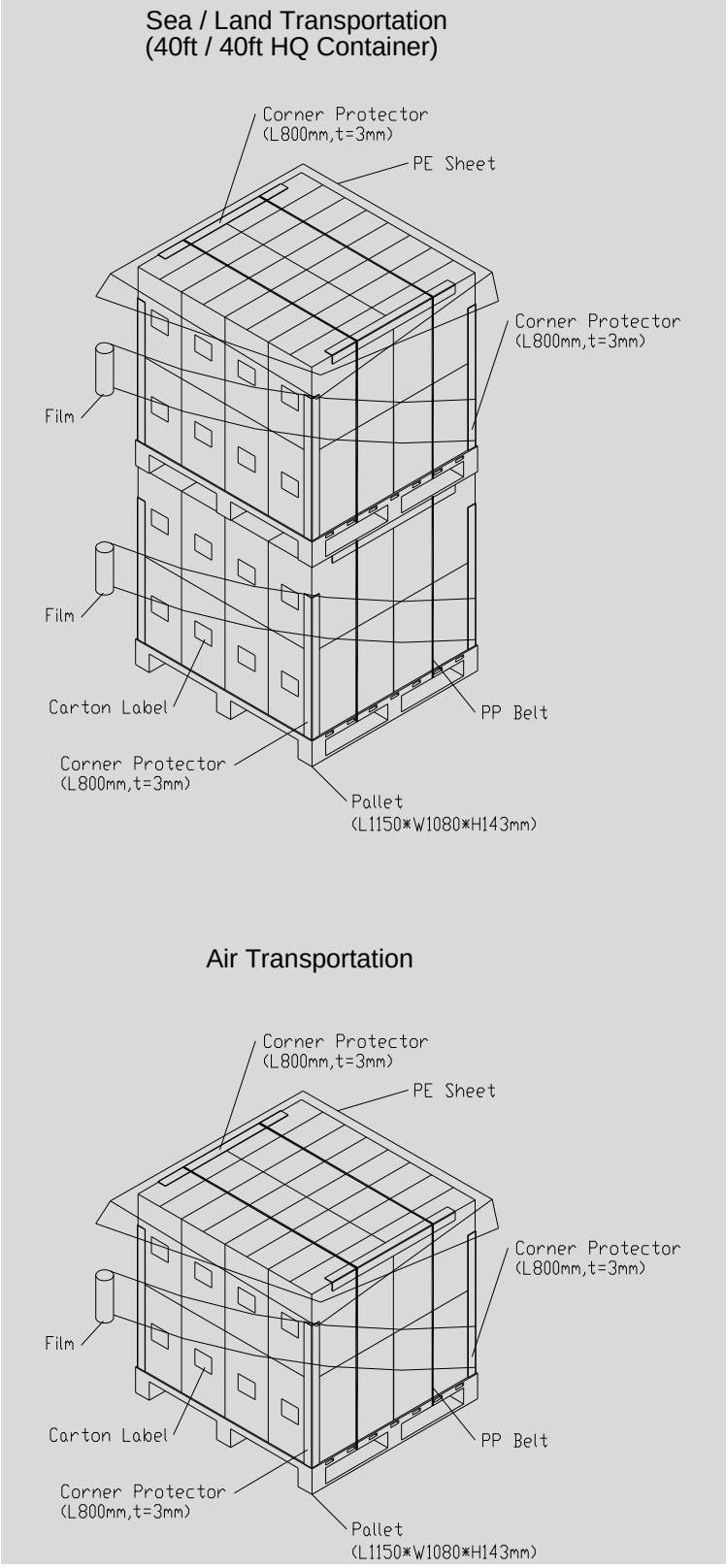


**Figure. 7-2 Packing method**



The copyright belongs to InnoLux. Any unauthorized use is prohibited.

### 7.4 UNPACKING METHOD

UN-packaging method is shown as following figures.

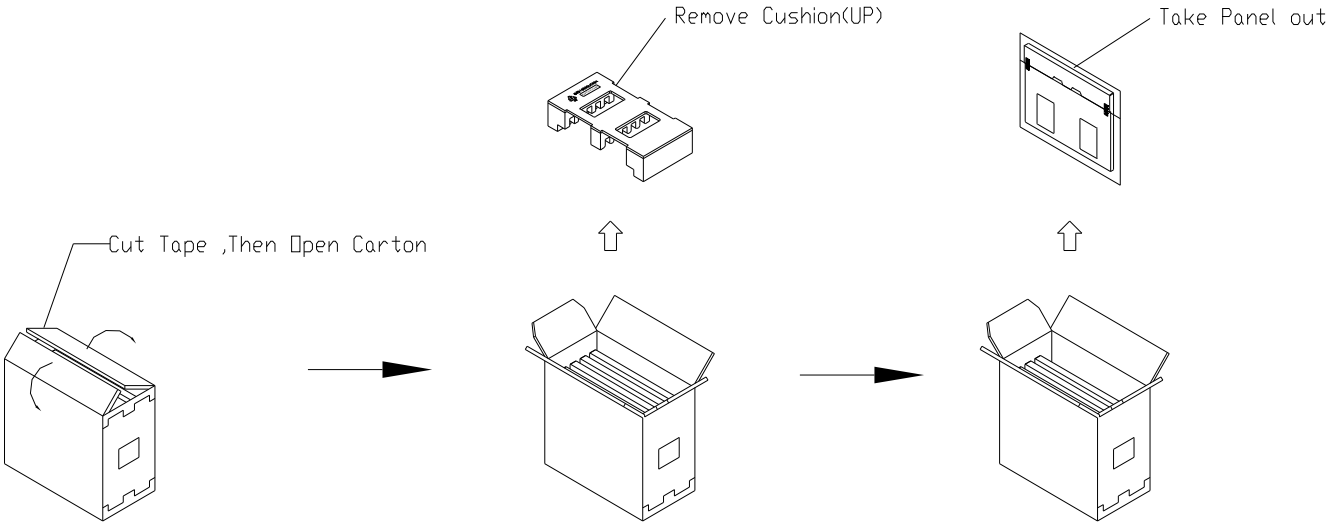


**Figure. 7-3 Un-packing method**

## 8. INX MODULE LABEL

The barcode nameplate is pasted on each module as illustration, and its definitions are as following explanation.

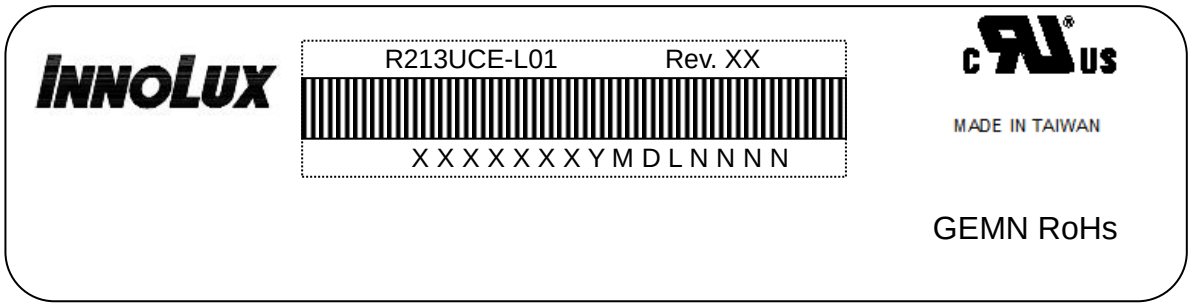


(a) Model Name: R213UCE-L01

(b) Revision: Rev. XX, for example: A1, B1, C1, C2 …etc.

(c) ＊＊＊＊: Factory ID

| Region | Factory ID |
|---|---|
| TWINX | GEMN |
| NBINX | LEOO |
| NBINX | VIRO |
| NHINX | CAPG |



The copyright belongs to InnoLux. Any unauthorized use is prohibited.

( d ) Serial ID: 0A X X XHV Y M D X N N N N

| Code | Meaning | Description |
|---|---|---|
| XX | INX internal use | - |
| XX | Revision | Cover all the change |
| X | INX internal use | - |
| XX | INX internal use | - |
| YMD | Year, month, day | Year: 2011=1, 2012=2, 2013=3, 2014=4…<br>Month: 1~12=1, 2, 3, ~, 9, A, B, C<br>Day: 1~31=1, 2, 3, ~, 9, A, B, C, ~, W, X, Y, exclude I, O, and U. |
| L | Product line # | Line 1=1, Line 2=2, Line 3=3, … |
| NNNN | Serial number | Manufacturing sequence of product |



The copyright belongs to InnoLux. Any unauthorized use is prohibited.

# 9. PRECAUTIONS

## 9.1 ASSEMBLY AND HANDLING PRECAUTIONS

(1) Do not apply rough force such as bending or twisting to the module during assembly.

(2) To assemble or install module into user's system can be only in clean working areas. The dust and oil may cause electrical short or worsen the polarizer.

(3) It's not permitted to have pressure or impulse on the module because the LCD panel and Backlight will be damaged.

(4) Always follow the correct power sequence when LCD module is connecting and operating. This can prevent damage to the CMOS LSI chips during latch-up.

(5) Do not pull the I/F connector in or out while the module is operating.

(6) Do not disassemble the module.

(7) Use a soft dry cloth without chemicals for cleaning, because the surface of polarizer is very soft and easily scratched.

(8) It is dangerous that moisture come into or contacted the LCD module, because moisture may damage LCD module when it is operating.

(9) High temperature or humidity may reduce the performance of module. Please store LCD module within the specified storage conditions.

(10)When ambient temperature is lower than 10ºC may reduce the display quality. For example, the response time will become slowly.

## 9.2 STORAGE PRECAUTIONS

(1) Do not leave the module in high temperature, and high humidity for a long time. It is highly recommended to store the module with temperature from 0℃ to 35℃ and relative humidity of less than 70%

(2) Do not store the TFT-LCD module in direct sunlight

(3) The module should be stored in dark place. It is prohibited to apply sunlight or fluorescent light in storing

## 9.3 OPERATION PRECAUTIONS

(1) The LCD product should be operated under normal condition.

Normal condition is defined as below :

Temperature : 20±15℃

Humidity: 65±20%

Display pattern : continually changing pattern(Not stationary)

(2) If the product will be used in extreme conditions such as high temperature, high humidity, high altitude ,display pattern or operation time etc…It is strongly recommended to contact INX for application engineering advice . Otherwise, its reliability and function may not be guaranteed.

## 9.4 SAFETY PRECAUTIONS

(1) If the liquid crystal material leaks from the panel, it should be kept away from the eyes or mouth. In case of contact with hands, skin or clothes, it has to be washed away thoroughly with soap.

(2) After the module's end of life, it is not harmful in case of normal operation and storage.



The copyright belongs to InnoLux. Any unauthorized use is prohibited.

## 9.5 SAFETY STANDARDS

The LCD module should be certified with safety regulations as follows:

(1) UL62368-1 or updated standard.

(2) IEC62368-1 or updated standard.

## 9.6 OTHER

When fixed patterns are displayed for a long time, remnant image is likely to occur.



The copyright belongs to InnoLux. Any unauthorized use is prohibited.

**Appendix. OUTLINE DRAWING**



The copyright belongs to InnoLux. Any unauthorized use is prohibited.

| REV | EC NUMBER | DESCRIPTION | DATE |
|---|---|---|---|
| A | | First Release | 2010/11/25 |
| B | EN1118056 | Notify Backs Thickness M/H=14.25mm | 2010/12/07 |

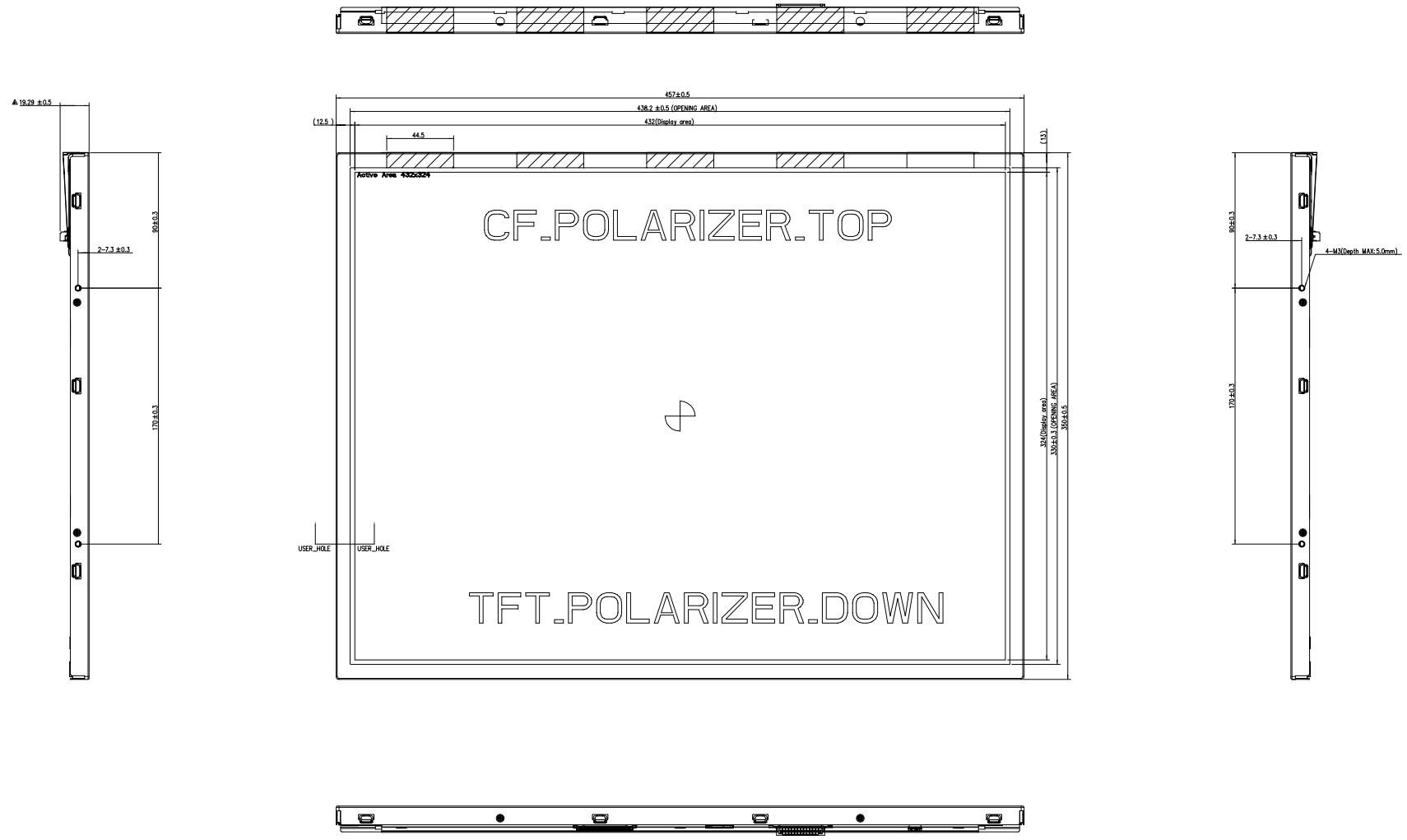


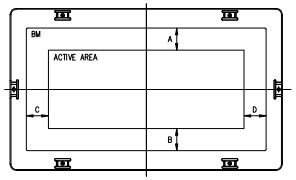


BM WIDTH VARIATION : |A-B|,|C-D|,=1.5 (MAX.)
FIG.1

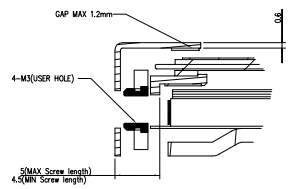


SECTION USER_HOLE-USER_HOLE
SCALE 5:1

NOTES:
1.UNSPECIFIED TOLERANCE: ±0.5mm
2.MODULE BACKSIDE CAN'T WITHSTAND ANYTHING EXCEPT USER HOLE.
3.DISPLAY AREA POSITION TOLERANCE: |A-B|<=1.5mm & |C-D|<=1.5mm(SEE FIG.1).
4.USER HOLE
4-1.SCREW HOLES TYPE:
4-2.STANDOFF TYPE :
STANDOFF: M3, PITCH=0.5/MACHINE, MAX. TORQUE=5 kgf-cm, MAX. DEPTH=5 mm

5.CONNECTOR TYPE:
CON_1:P-TWO,187098-30091
CON_2: FCN,JH2-D4-143N

| | | | | |
|---|---|---|---|---|
| APPROVED | SY.F | PART NUMBER: DN11190058 | | B |
| CHECKED | MSH.H | PART DESCRIPTION: MSH_MODULE_BACKSIDE-LCD_IS1005 | | 1/2 |
| DESIGNED | EASON.TSENG | | | A0 |

| REV | EC NUMBER | DESCRIPTION | DATE |
|---|---|---|---|
| A | — | First Release | 2018/11/28 |
| B | 2019[illegible] | Modify Double Tolerance 10.01-±0.25mm | 2019/10/17 |

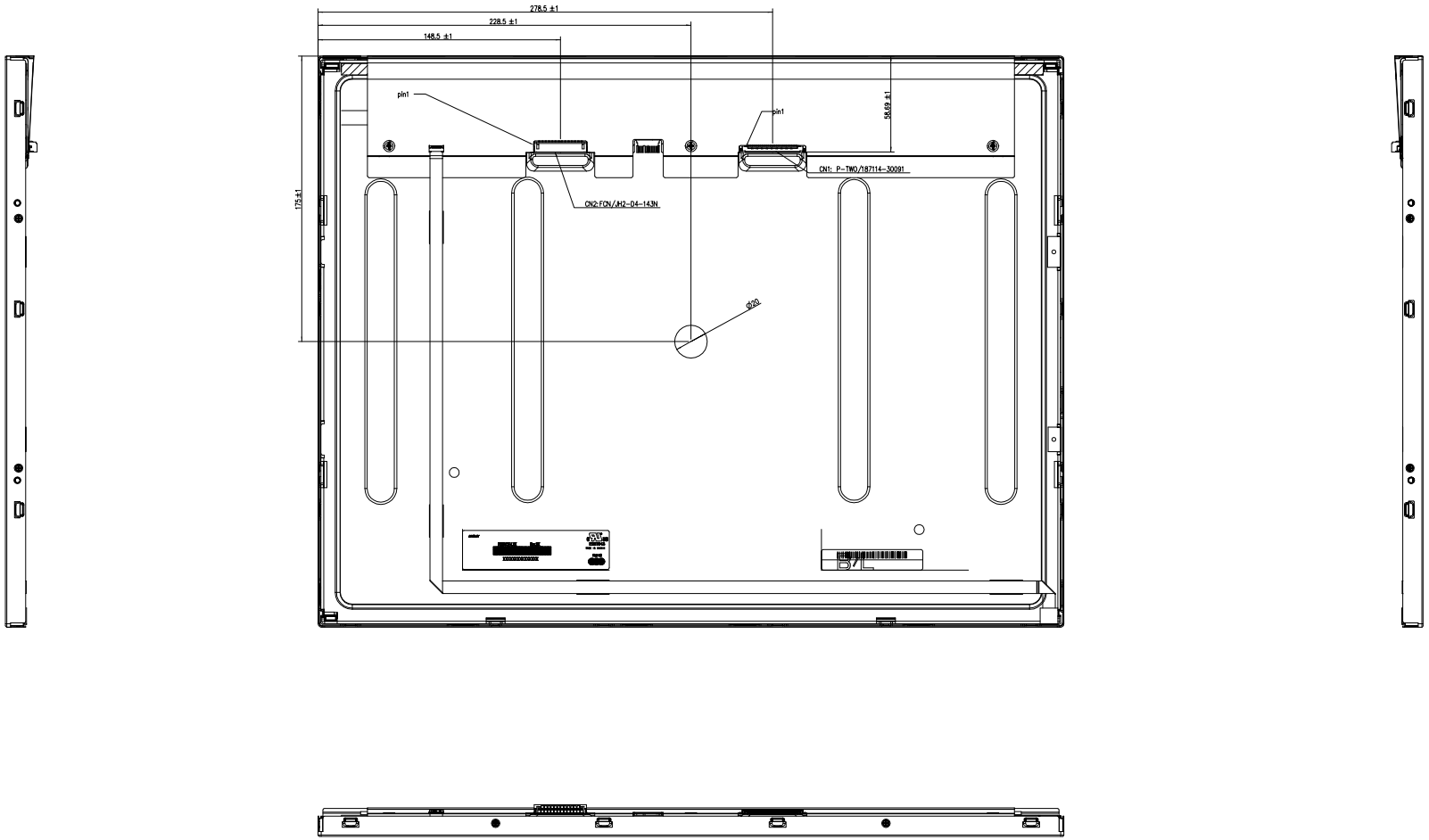


| | | | | |
|---|---|---|---|---|
| CONTROL DIMENSION | CONTROL DIMENSION | DATE: 2019/10/17 | SCALE: 1:1 | UNIT: mm |
| APPROVED | SY.F | PART NUMBER: DN11119058 | | REVISION: B |
| CHECKED | WSH.H | PART DESCRIPTION: MSH_MODULE_RS232/EC-LIN_IP2005 | | PART NUMBER: 2/2 |
| DESIGNED | EASON.TSENG | | | SIZE: A0 |