REV.	DATE	DESCRIPTION	BY	APVD
0	20250512	1. 因關稅修改Made in Taiwan, China的則移除, China 2.料號更新	killy	

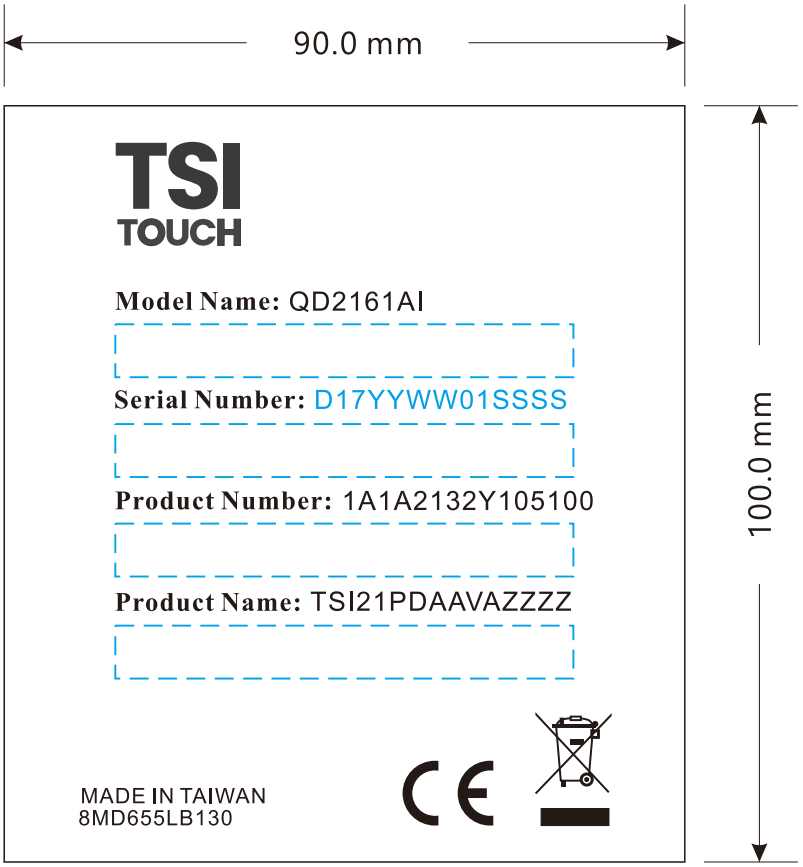

Note:
1.Use 3MDL4XLB440 Blank label.
2.Use Ricoh #B110A ribbon.

PM / SALES	THIRD ANGLE PROJECTION	UNITS: mm	SCALE: 1/1	SHEET: 1/1	MODEL NO.: TSI21PDAAVAZZZZ
		MATERIAL: SEE NOTES		TREATMENT: SEE NOTES	
PE / PCD	DSGD by: Killy	2025/05/16	PART NAME: CARTON LABEL		
	APVD by:		PART NO.: 8MD655LB130		VER.0
	APVD NO.:	FILE NAME: TSI21PDAAVAZZZZ.cdr	DIVA Laboratories,Ltd.		