REV.	DATE	DESCRIPTION	BY	APVD
A	2025-05-09	FIRST RELEASE	JOSEPH	LASLIE

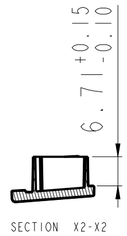

SECTION X2-X2

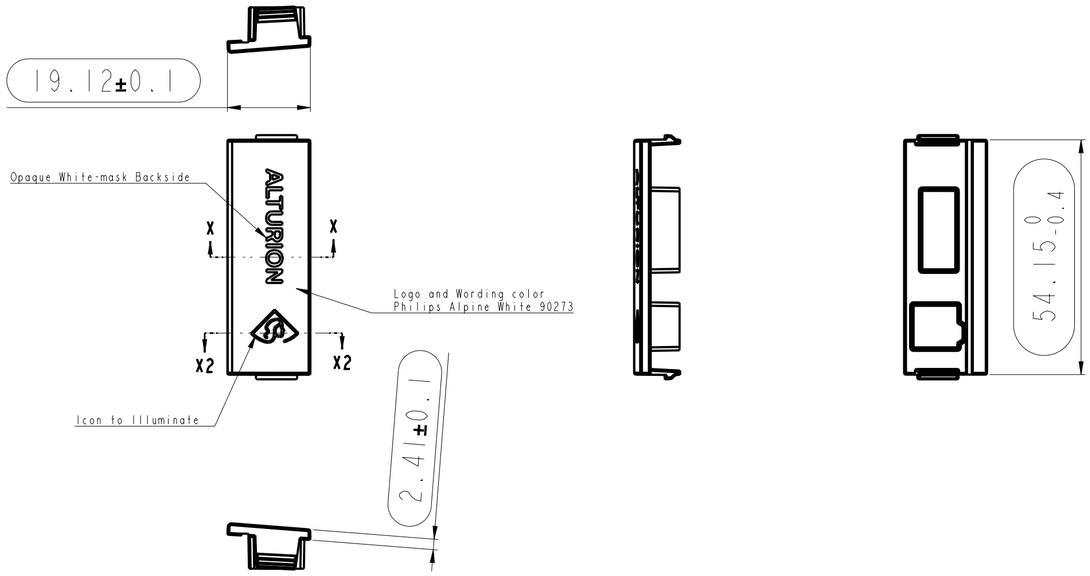

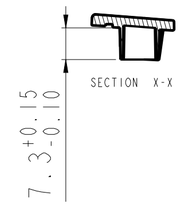

SECTION X-X

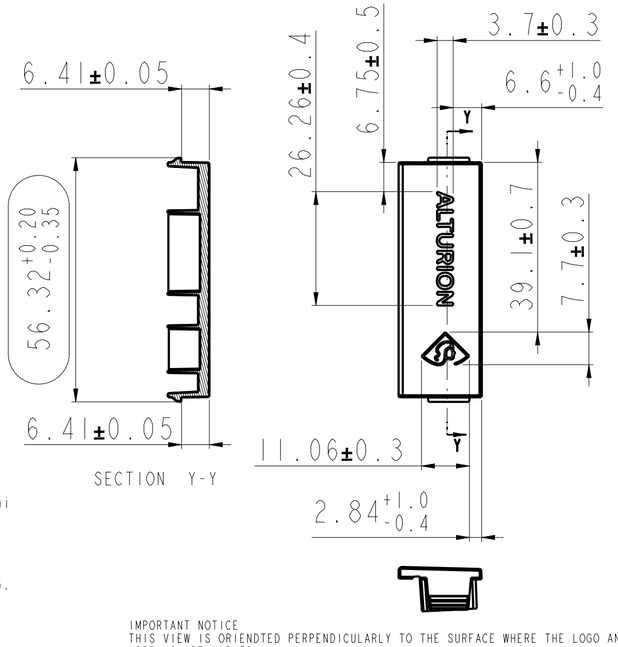

SECTION Y-Y

IMPORTANT NOTICE
THIS VIEW IS ORIENDTED PERPENDICULARLY TO THE SURFACE WHERE THE LOGO AND WORDING ARE MARKED
OTHER VIEWS EXPLOSION ARE ORIENTED ACCORDING TO THE DEMOLDING DIRECTION OF THE SUBSTRATE.

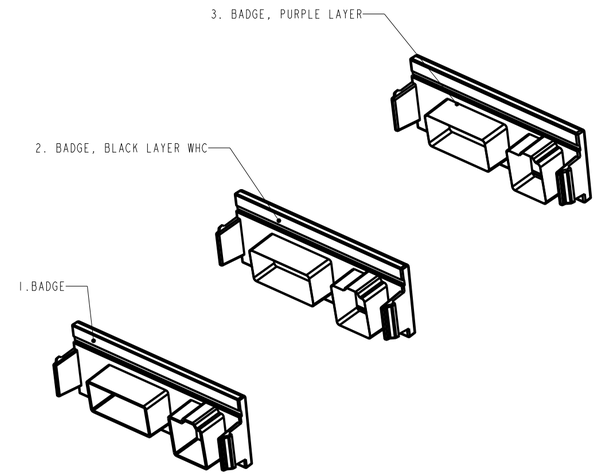

LAYERS EXPLOSION
FOR ILLUSTRATIVE REFERENCE ONLY

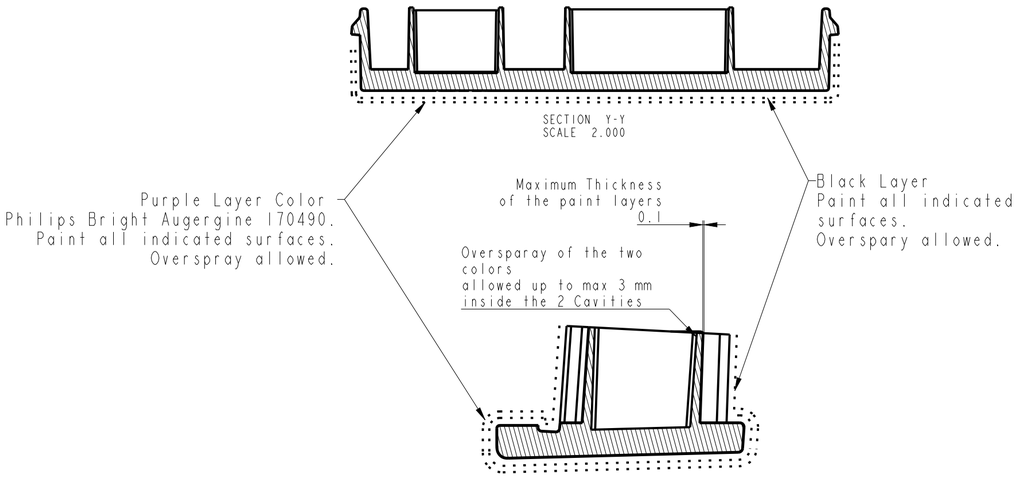

Notes:
1. Material: PC (LV2250Y) Philips White 90273
   Translucent Amber
2. Textuer : MT11010
3. Printing: COLOR ALPINE WHITE 90273
4. Painting:
   PAINT AS INDICATED.
   (1). BLACK
   (2). Philips color No.:170490 Bright Augergine(Purple)
   Paint gloss G30 according to iso2813 60°
   OVERSPRAY PERMITTED, EXCEPT WHERE INDICATED.
   PART IS PAINTED 2 LAYERS AS INDICATED.
5. LOGO AND WORDING ACCORDING TO FILE.
   4535619147600O6A - Industrial Design Branding Specification 24in LCDSystem Display.ai
   LOGO AND WORDING EPIQ MUST APPERAR AS COLOR ALPINE WHITE 90273,
   CONTOURS MUST BE CLEARLY MARKED.
   ETCHING OF THE 2 PAINT LAYERS CAN BE DONE VIA MILLING, LASER OR MASKING.
6. SOFTWARE SECTION RIBS, ALSO LONGITUDINAL.
7. AESTHETICAL REQUIREMENTS ACCORDING TO PHILIPS STANDARD 9060-0488, TABLE A.7. CLASS B.
8. Generally Thickness:2.4
9. ⬭Inspection dimension.
10. Unspecified Dimension refer to CAD Drawing file.
11. Warpage and flatness tolerance : ≤0.3
12. RoHS Compliant

RANGE OF DIMENSION	TOLERANCE CLASS DESIGNATION V		
	fine	medium	coarse
0.5 UP TO 3	±0.05	±0.1	±0.2
OVER 3~6	±0.05	±0.1	±0.3
OVER 6~30	±0.1	±0.2	±0.5
OVER 30~120	±0.15	±0.3	±0.8
OVER 120~400	±0.2	±0.5	±1.2
OVER 400~1000	±0.3	±0.8	±2.0
OVER 1000~2000	±0.5	±1.2	±3.0
ANGLE ±1° (±1.75/100)			

THIRD ANGLE PROJECTION

UNITS: mm	SCALE: 1/1	SHEET: 3 OF 5	MODEL NO.: VM14		
MATERIAL: PC		TREATMENT: SEE NOTES			
DSGD by	JOSEPH	2025-05-09	PART NAME:	Badge, WH(ALTURION)	
CHK by	LASLIE	2025-05-09	DIVA P/N:	3MD539PA110	
APVD by	LASLIE	2025-05-09	Philips NO.:	300014364301	
APVD NO.:		3D FILE NAME: 24_EPIQ_BADGE	DIVA Laboratories ,Ltd.		