Customer 客戶名稱：

No 序列號:

Attention 聯繫人：

Approval Date 承認日期:

Your Part No 客戶料號：

Sample No 樣品號.：

SPECIFICATION

規 格 說 明 書

Model 型號： USB-A1B69C-0B24N-W

Spec No 規格： USB Type C 3.1

Customer Approval Status 客戶承認狀況	HUATAC File Publish Sign 華傑文件發行蓋章處
Dsg'd 設計:	Edition 版本： A
Chk'd 審核:	
App'd 批准:	
File Publish Sign 文件發行蓋章處	File clerk 文管:

HUA JIE (TAIWAN) CORP.

臺灣華傑股份有限公司

6F,NO.25,JI-LIN ROAD.CHUNG LI.

TAIWAN (CHUNGLI INDUSTRILA ZONE)

臺灣中壢工業開發區吉林路 25 號 6 樓

E-mail:huajie@mail.hua-jie.com

SUZHOU HUAJIE ELECTRONICS CO.LTD

蘇州華傑電子有限公司

NO.7.Zhangzhuang Road Huangqiao

Town Suzhou.China

中國江蘇省蘇州市黃橋鎮張莊路 7 號

Dsg'd 設計 技术部 20.02.27 卢红

App'd 批准 技术部 20.02.27 杨勇

Sales 業務員

REV.	ECN. NO.	DESCRIPTION	DRAWN	DATE
A	---------	DRAWING RELEASE	XC	11/04'21

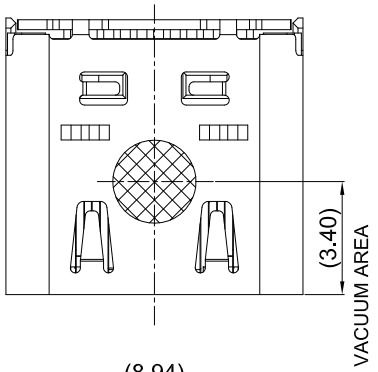

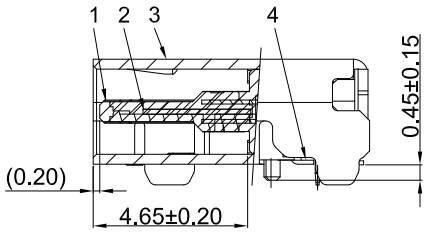

NOTE/注释：

1. SPECIFICATION/规格:
   - 1.1 Rated current（额定电流）: 5.0 A
   - 1.2 Voltage rating（额定电压）: 20V AC
   - 1.3 Contact Resistance（接触阻抗）: 40 m Ω Max.
   - 1.4 Insulation Resistance（绝缘阻抗）:100MΩ Min.
   - 1.5 Withstanding voltage（耐电压）: 100 VAC/minute
   - 1.6 Mating force（插入力）: 5~20N .
   - 1.7 Unmating force（拔出力）: 8~20N.
   - 1.8 Durability Cycle(寿命循环):10,000 cycle
   - 1.9 Operating temperature（工作温度）: -40°~+85°

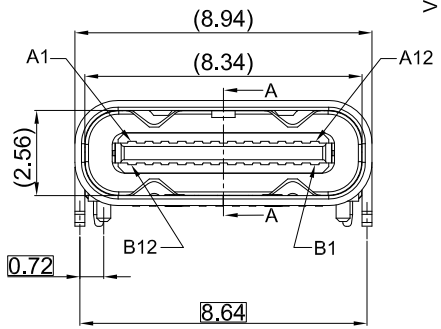

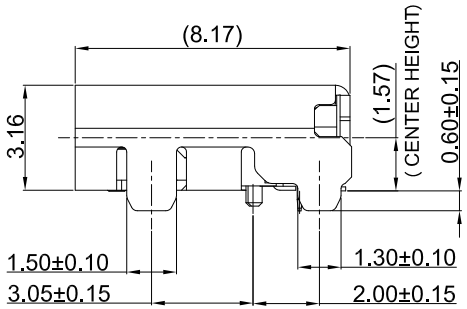

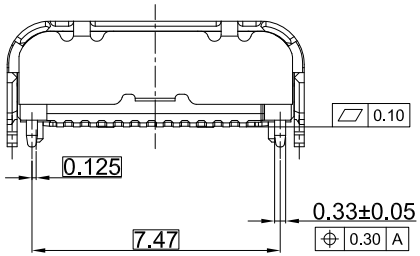

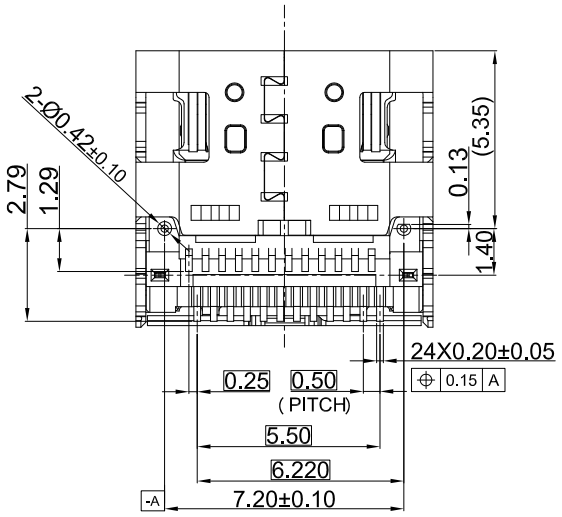

PIN ASSIGNMENT:

A1	A2	A3	A4	A5	A6	A7	A8	A9	A10	A11	A12
GND	TX1+	TX1−	Vbus	CC1	D+	D−	SBU1	Vbus	RX2−	RX2+	GND
GND	RX1+	RX1−	Vbus	SBU2	D−	D+	CC2	Vbus	TX2−	TX2+	GND
B12	B11	B10	B9	B8	B7	B6	B5	B4	B3	B2	B1

SUZHOU HUAJIE ELECTRONICS CO.,LTD

UNITS	mm		
x.	±0.30	x°	±5°
.x	±0.25	.x°	±3°
.xx	±0.20	.xx°	±2°
.xxx	±0.15	.xxx°	±1°

TITLE: USB Type C 3.1 母座 有后盖 单壳
双贴SMT 板上平贴,L=8.17mm

APPD:		PART NO. USB-A1B69C-0B24N-W
CHKD:		
DR:	11/04'21	

SCALE	SHEET	REV.
N/A	1/2	A

C—DRAWING

REV.	ECN. NO.	DESCRIPTION	DRAWN	DATE
A	----------	DRAWING RELEASE	XC	11/04'21

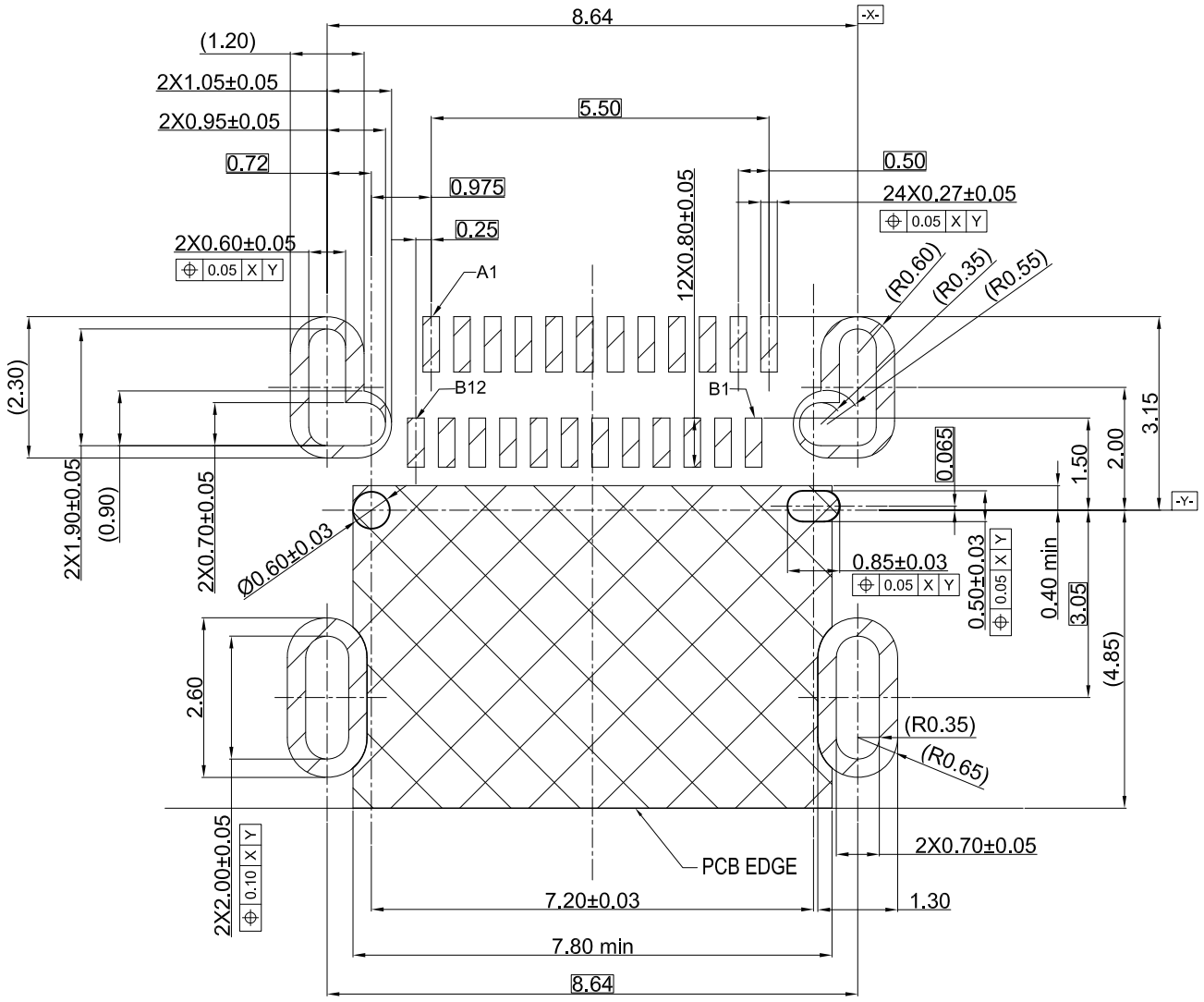

Recommended PCB pattern Layout
General Tolerance: ±0.05

ITEM	DESCRIPTION	Q'TY	MATERIAL	FINISH	REMARK
4	TERMINAL	24	C18140	MATING SIDE:SEE PART NO; SOLDER TAIL:Gold FLASH, 50u" NICKEL OVERALL.	T=0.12
3	SHELL	1	SUS304	NICKEL PLATING	T=0.30
2	MID PLATE	1	SUS301	NICKEL PLATING	T=0.15
1	MAIN HOUSING	1	PA9T HF 30%玻纤，UL94 V-0，黑色		BLACK UL94V-0

BILL OF MATERIAL

SUZHOU HUAJIE ELECTRONICS CO.,LTD

UNITS	mm
x. ±0.30	x.° ±5°
.x ±0.25	.x° ±3°
.xx ±0.20	.xx° ±2°
.xxx ±0.15	.xxx° ±1°

TITLE: USB Type C 3.1 母座 有后壳 单壳
双贴SMT 板上平贴,L=8.17mm

APPD:
CHKD:
DR: 11/04'21

PART NO. USB-A1B69C-0B24N-W

SCALE	SHEET	REV.
N/A	2/2	A

C—DRAWING

REV.	ECN. NO.	DESCRIPTION	DRAWN	DATE
A	----------	DRAWING RELEASE	XC	11/04'21

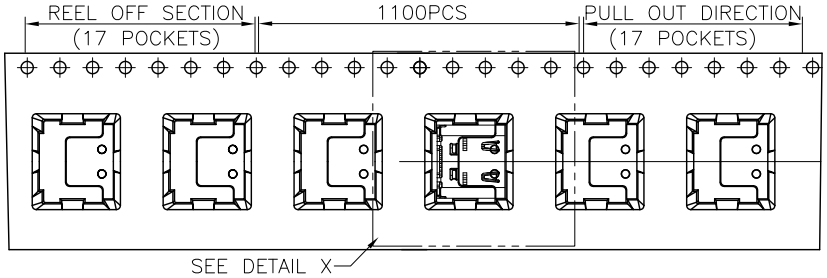

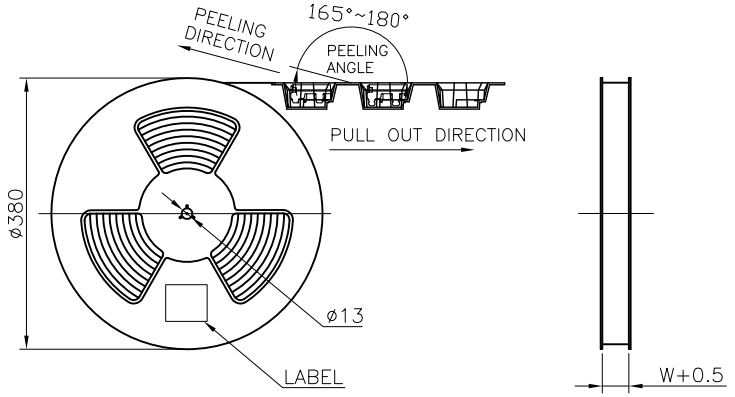

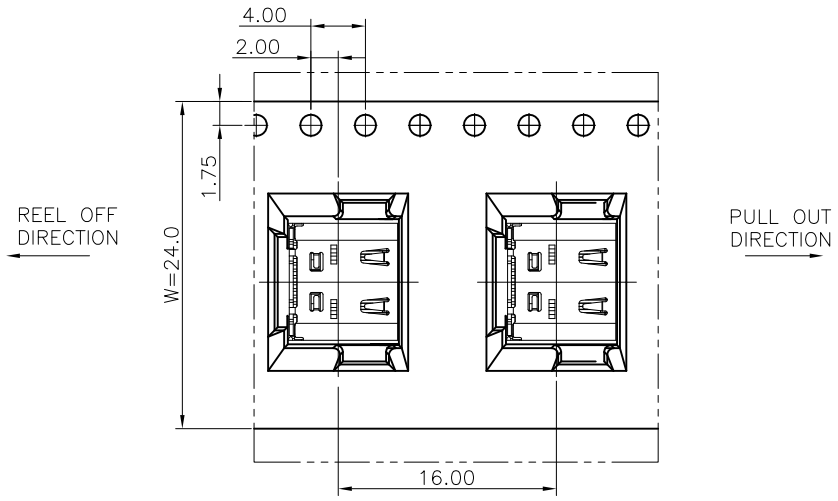

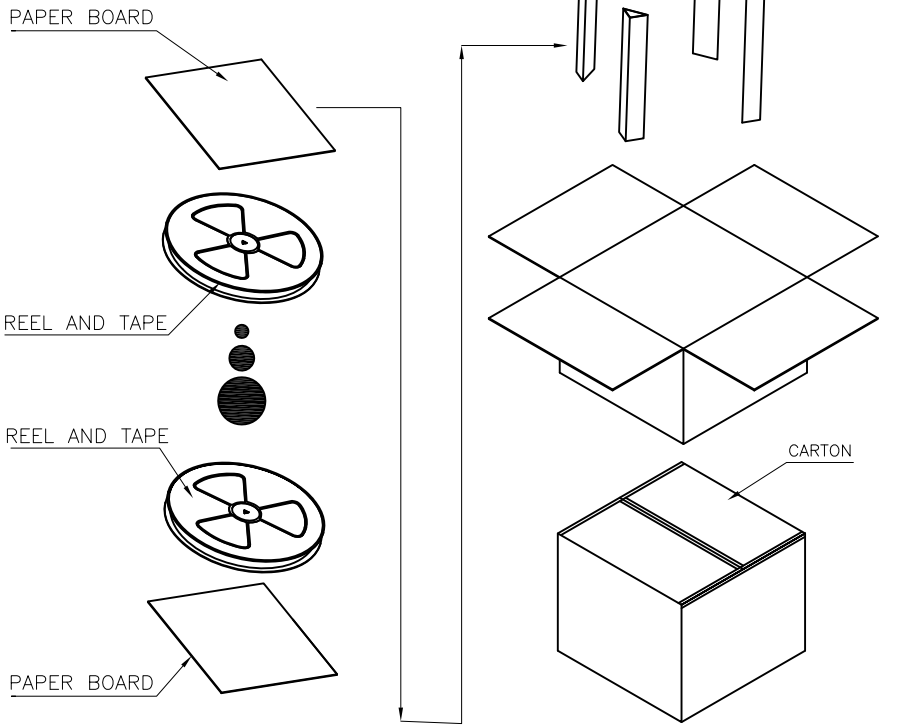

	REEL	CARTON
CONNECTOR (PCS)	1100	11000

SUZHOU HUAJIE ELECTRONICS CO.,LTD

UNITS	mm		
X.	±0.30	X.°	±5°
.X	±0.25	.X°	±3°
.XX	±0.20	.XX°	±2°
.XXX	±0.15	.XXX°	±1°

TITLE: USB Type C 3.1 母座 双贴SMT
板上平贴,L=8.17mm 包装规范

APPD:
CHKD:
DR: 11/04'21

PART NO. USB-A1B69C-0B24N-W

SCALE	SHEET	REV.
N/A	1/1	A

PK-DRAWING

PRODUCT SPECIFICATION

1.0 Scope

This product specification defines the mechanical, electrical and environmental performance requirements and test methods for USB TYPE C connectors.

2.0 Product Description

Design and Construction

Construction and physical dimensions shall be specified on the applicable sales drawing.

3.0 Rating

1. Voltage Rating: 20 V DC/AC Max
2. Current Rating: V-bus and GND 5A
   VCONN 1.25A
   Other 0.25A
3. Operating Temperature: -30℃ to + 85 ℃
   Storage Temperature:-40℃ to + 85℃

4.0 Product Specifications

The connectors covered in this product specifications are designed to meet the electrical, mechanical and environmental performance requirements as listed in **Table** Test procedures are indicated in each of the performance requirements.

5.0 Performance & Test Description

Item	Requirement	Test Procedures
Examination of Product	Meets requirements of product drawing No physical damage	Visual inspection
ELECTRICAL		
Low Level Contact Resistance(LLCR)	40mΩ(Max)	Subject mated contacts assembled in housing to 20mV Max open circuit at 100mA Max. [*EIA-364-23B*]
Dielectric Withstanding Voltage	No creeping discharge nor flash over Shall occur.	100V AC for 1 minute test between adjacent circuits of unmated and mated connectors. [*EIA-364-20*]
Insulation Resistance	A minimum of 100MΩ insulation resistance	500V AC for 1 minute Test between adjacent contacts of unmated and mated connectors. [*EIA 364-21*]
MACHINE		
Mating Force	5N to 20N	Operation Speed:[12.5] mm/min Measure the force required to mate connector. [*EIA-364-13*]
Unmating Force	8N to 20N form 10000cycles 6N to 20N after 10000cycles	Operation Speed:[12.5] mm/min Measure the force required to unmate connector. [*EIA-364-13*] Within the range of 8N to 20N ,measured after a preconditioning of five insertion/extraction cycles(i,e., the sixth extraction).After an additional twenty-five insertion/extraction cycles, The extraction force shall be measured again(i.e., thirty-second extraction) and the extraction force shall be within: a) 33% of the initial reading b) within the range of 8N to 20N The extraction force shall be within the range of 6N to 20N after10000 insertion/extraction cycles.

Item	Requirement	Test Procedures
Durability	Appearance: No Solder Creack Contact Resistance: 50 m Ω Max Insulation Resistance:100M Ω Min Dielectric withstanding Voltage: No Breakdown Mating Force: 5N~20N Unmating Force:6N~20N	Perform 2,468 plug/unplug cycles. Rotate the receptacle or plug 180° and perform 2,500 plug/unplug cycles. Rotate the receptacle or plug 180° and perform 2,500 plug/unplug cycles. Rotate the receptacle or plug 180° and perform 2,500 plug/unplug cycles. Cycle rate of 500 ± 50 cycles per hour (total of 10,000 plug/unplug cycles, flipping every 2,500 cycles).
Vibration	Appearance: No damage Discontinuity: 1 microsecond Max	Subject mated connectors to 10-55-10HZ traversed in 1 minute at 1.52mm amplitude 15 minutes each of 3 mutually perpendicular planes. [*EIA-364-28 Condition VII, Test letter D*]
Mechanical Shock	Appearance: No Damage Discontinuity:1 μ s Max	Acceleration: 50G； Sustainment time: 11ms; 3 times for each test in each direction [*EIA 364-27*]

ENVIRONMENT

Heat Resistance	Appearance: No Damage Contact Resistance: 50 m Ω Max Insulation Resistance:100M Ω Min Dielectric withstanding Voltage: No Breakdown	Temperature: 85 ℃±2 ℃ Duration: 96h(After test return to ambient temp for 1~2H)
Cold Resistance	Appearance: No Damage Contact Resistance: 50 m Ω Max Insulation Resistance:100M Ω Min Dielectric withstanding Voltage :No Breakdown	Temperature: -40 ℃±2 ℃ Duration: 96h(After test return to ambient temp for 1~2H)

Item	Requirement	Test Procedures
Thermal shock	Appearance: No Damage Contact Resistance:50 m Ω Max Insulation Resistance:100M Ω Min Dielectric withstanding Voltage: No Breakdown	Mated Connectors -40±3℃(30 Min), 85±2℃(30 min) Perform repeat 10 cycles [*EIA-364-32*]
Cyclic temperature and humidity	Appearance: No Damage Contact Resistance: 50 m Ω Max Insulation Resitance:100M Ω Min Dielectric withstanding Voltage: No Breakdown	Temperature: 55℃; Relative Humidity: 85%; Duration:96Hr (After test return to ambient temp for 1~2H) [*EIA-364-31*]
Solder Ability	The inspected area of each lead must have 95% solder coverage minimum	Solder pot temperature:260℃±5℃,5sec
Salt Spray	There shell be no exposure of base metal of contact which is detrimental To contacting. Contact Resistance:50m Ω Max	Temperature: 35℃ Salt water density: 5% Duration: 48Hr (After Test wash a connector, Return to Ambient temp for 1~2H)
Resistance to Reflow Soldering Heat	No physical damage shall occur (lead-free) Measure Size: 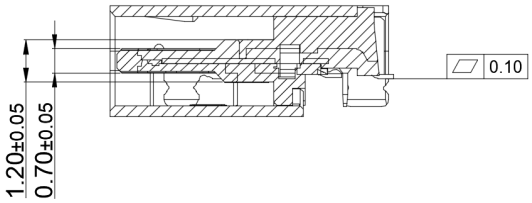	Pre Heat:150~180℃,90±30 Sec. Heat:230℃ Min.,30±10 Sec. Peak Temp:260+0/-5℃,20-40sec. Duration:2 cycles. Test spec:109-201,Condition B, Fig 5)

Figure 5. Resistance to flow solder heat

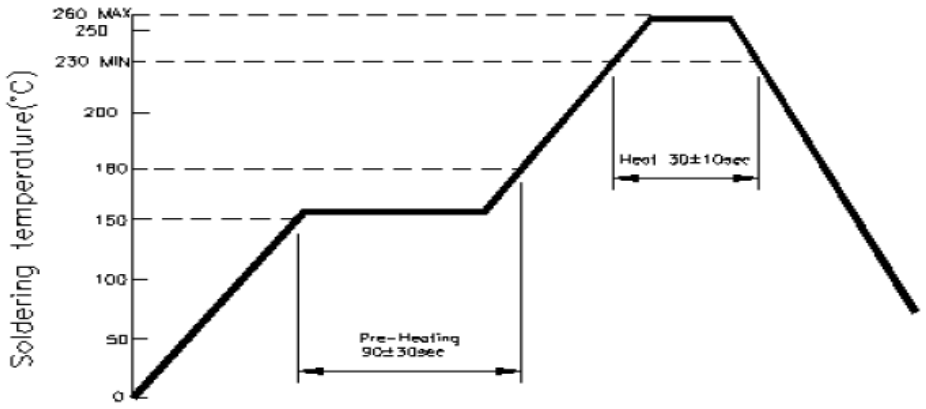

Test Item		Test Group												
		A	B	C	D	E	F	G	H	I	J			
1	Appearance	1. 8	1.4	1.4	1.4	1.4	1.4	1.4	1.3	1.4	1.3			
2	Contact Resistance (Low Level)	2.9	2.5	2.5	2.5	2.5	2.5	2.5		2.5				
3	Insulation Resistance	3.10												
4	Dielectric Withstanding Voltage	4.11												
5	Mating Force	5.12												
6	Extraction Force	6.13												
7	Durability	7												
8	Vibration		3											
9	Mechanical Shock			3										
10	Heat Resistance				3									
11	Cold Resistance					3								
12	Thermal Shock						3							
13	Humidity							3						
14	SolderAbility								2					
15	Salt Spray									3				
16	Reflow										2			