AME

AME8867

36V 250mA Ultralow Quiescent Current LDO

■ General Description

The AME8867 device is a low dropout linear regulator designed for up to 36V input voltage operations. With only 1.5μA(typical) quiescent current at light load, the device is suitable for standby micro-control unit systems, especially in continuous standby applications such as notebook, networking, industrial products and battery powered equipment.

The devices feature an integrated short-circuit and over current protection.

The AME8867 device is available in SOT-23, SOT-25, SOT-89, SOT-223 and SOP-8/PP packages.

■ Features

- 4.75V to 36V Wide Input Voltage Range
- Output Voltage Tolerance: ±2%
- Maximum Output Current: 250mA
- Ultra Low Quiescent Current: 1.5μA(typical)
- 1.2V Typical Low Dropout Voltage at 250mA Load Current
- Internal Over Temperature Protection
- Internal Over Current Protection
- Stable With Low ESR Ceramic Output Capacitor

■ Applications

- Keep-Alive Supply in Notebook and Portable Computers
- Always-On Battery Application
- USB Power Supply
- Ultra Low Power Microcontrollers

■ Typical Application

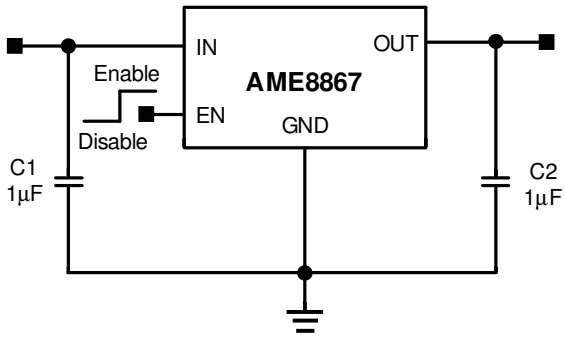

■ Functional Block Diagram

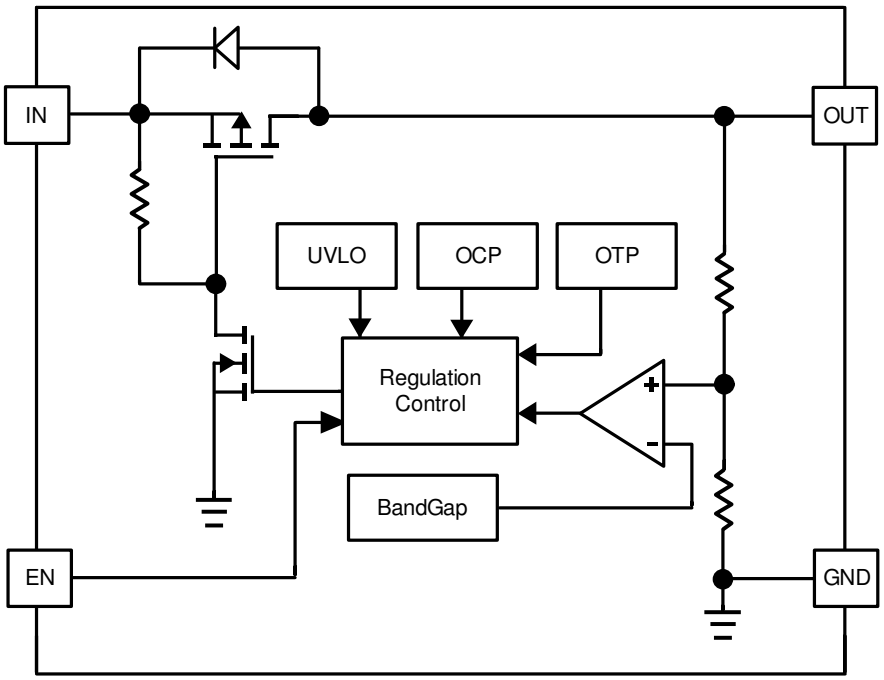

■ Pin Configuration (Contd.)

SOT-23
Top View

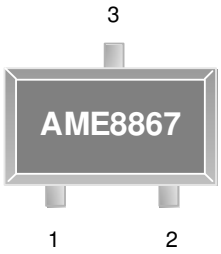

AME 8867-AETxxx

1. IN
2. OUT
3. GND

*** Die Attach:**
Conductive Epoxy

SOT-23
Top View

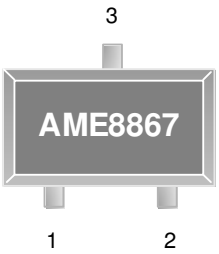

AME 8867-BETxxx

1. OUT
2. IN
3. GND

*** Die Attach:**
Conductive Epoxy

SOT-23
Top View

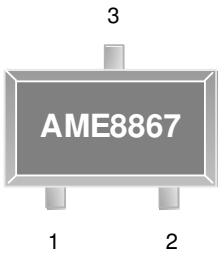

AME 8867-CETxxx

1. GND
2. OUT
3. IN

*** Die Attach:**
Non-Conductive Epoxy

SOT-89
Top View

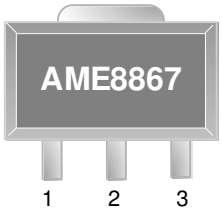

AME 8867-AFTxxx

1. IN
2. GND (TAB)
3. OUT

*** Die Attach:**
Conductive Epoxy

SOT-89
Top View

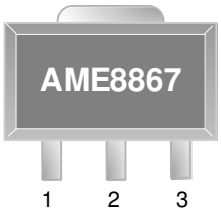

AME 8867-BFTxxx

1. GND
2. IN (TAB)
3. OUT

*** Die Attach:**
Non-Conductive Epoxy

SOT-89
Top View

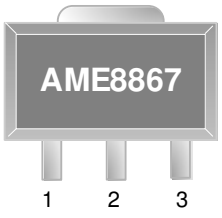

AME 8867-CFTxxx

1. OUT
2. GND (TAB)
3. IN

*** Die Attach:**
Conductive Epoxy

■ Pin Configuration

SOT-25
Top View

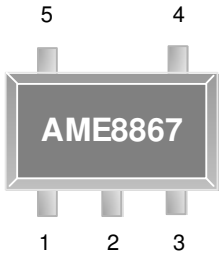

AME 8867-AEVxxx

1. IN
2. GND
3. EN
4. NC
5. OUT

*** Die Attach:**
Conductive Epoxy

SOT-25
Top View

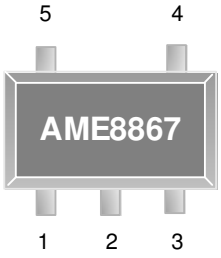

AME 8867-BEVxxx

1. GND
2. IN
3. OUT
4. NC
5. NC

*** Die Attach:**
Non-Conductive Epoxy

SOP-8/PP
Top View

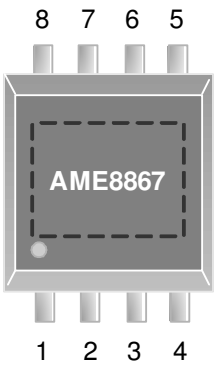

AME 8867-AZAxxx

1. OUT
2. GND
3. GND
4. NC
5. EN
6. GND
7. GND
8. IN

*** Die Attach:**
Conductive Epoxy

SOT-223
Top View

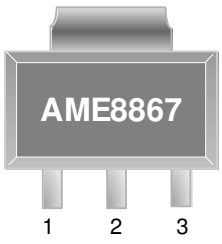

AME 8867-AGTxxx

1. IN
2. GND (TAB)
3. OUT

*** Die Attach:**
Conductive Epoxy

Note:
Connect exposed pad (heat sink on the back) to GND.

■ Pin Description

Pin Name	Pin Description	Pin Number									
		SOT-23			SOT-89			SOT-223	SOT-25		SOP-8/PP
		A	B	C	A	B	C	A	A	B	A
IN	Input Voltage pin	1	2	3	1	2	3	1	1	2	8
GND	Ground.	3	3	1	2	1	2	2	2	1	2, 3, 6, 7
OUT	Output Voltage pin.	2	1	2	3	3	1	3	5	3	1
EN	Enable pin.	NA	NA	NA	NA	NA	NA	NA	3	NA	5
NC	No connection.	NA	NA	NA	NA	NA	NA	NA	4	4/5	4

■ Ordering Information

AME8867 - x x x xxx

- xxx — Output Voltage
- x — Number of Pins
- x — Package Type
- x — Pin Configuration

Pin Configuration		Package Type	Number of Pins	Output Voltage
A (SOT-23)	1. IN 2. OUT 3. GND	E: SOT-2X F: SOT-89 G: SOT-223 Z: SOP-8/PP	T: 3 V: 5 A: 8	330: 3.3V 440: 4.4V 500: 5.0V
B (SOT-23)	1. OUT 2. IN 3. GND			
C (SOT-23)	1. GND 2. OUT 3. IN			
A (SOT-89) (SOT-223)	1. IN 2. GND 3. OUT			
B (SOT-89)	1. GND 2. IN 3. OUT			
C (SOT-89)	1. OUT 2. GND 3. IN			
A (SOT-25)	1. IN 2. GND 3. EN 4. NC 5. OUT			
B (SOT-25)	1. GND 2. IN 3. OUT 4. NC 5. NC			
A (SOP-8/PP)	1. OUT 2. GND 3. GND 4. NC 5. EN 6. GND 7. GND 8. IN			

■ Absolute Maximum Ratings

Parameter	Maximum	Unit
Input Voltage	-0.3 to +45	V
Junction Temperature	125	°C
Storage Temperature	-65 to +150	
Lead Temperature (Soldering, 10sec.)	300	

Note: (1)Stresses beyond those listed under "absolute maximum ratings" may cause permanent damage to other conditions beyond those indicated under "recommended operation conditions" is not implied. Exposure to absolute maximum rating conditions for extended periods may affect device reliability.

(2)All volatge values are with respect to the GND terminal.

(3)Absolute negative voltage on these pins must not to go below -0.3V.

■ Recommended Operating Conditions

Parameter	Symbol	Rating	Unit
Input Voltage	V_{IN}	4.75 to 36	V
Junction Temperaturen Range	T_J	-40 to +125	°C

Note: Refer to typical application circuit.

■ Thermal Information

Parameter	Package	Die Attach	Symbol	Maximum	Unit
Thermal Resistance* (Junction to Case)	SOT-23	Conductive Epoxy	θ_{JC}	81	°C / W
		Non-Conductive Epoxy		140	
	SOT-25	Conductive Epoxy		81	
		Non-Conductive Epoxy		140	
	SOT-89	Conductive Epoxy		40	
		Non-Conductive Epoxy		46	
	SOT-223	Conductive Epoxy		25	
	SOP-8/PP	Conductive Epoxy		19	
Thermal Resistance (Junction to Ambient)	SOT-23	Conductive Epoxy	θ_{JA}	260	°C / W
		Non-Conductive Epoxy		280	
	SOT-25	Conductive Epoxy		260	
		Non-Conductive Epoxy		260	
	SOT-89	Conductive Epoxy		180	
		Non-Conductive Epoxy		180	
	SOT-223	Conductive Epoxy		120	
	SOP-8/PP	Conductive Epoxy		84	
Internal Power Dissipation	SOT-23	Conductive Epoxy	P_D	400	mW
		Non-Conductive Epoxy		400	
	SOT-25	Conductive Epoxy		400	
		Non-Conductive Epoxy		400	
	SOT-89	Conductive Epoxy		550	
		Non-Conductive Epoxy		550	
	SOT-223	Conductive Epoxy		900	
	SOT-25	Conductive Epoxy		400	
	SOP-8/PP	Conductive Epoxy		1450	
Lead Temperature (soldering 10 sec)**				300	°C

* Measure θ_{JC} on backside center of tab
** MIL-STD-202G 210F

■ Electrical Specifications

V_{IN} = V_{OUT} + 2V, I_{OUT} = 1mA, C_{IN} = C_{OUT} = 1.0µF, T_J = 25°C, unless otherwise specified.

Parameter	Symbol	Test Condition	Min	Typ	Max	Units
Input Voltage	V_{IN}		4.75		36	V
DC Output Accuracy	V_{OUT}		-2%		2%	V
Line Regulation	$\triangle V_{LINE}$	V_{IN} = V_{OUT} +1.5V to 36V		2	12	mV
Load Regulation	$\triangle V_{LOAD}$	I_{OUT} = 1mA to 100mA		0.5	1	%
		I_{OUT} = 1mA to 250mA		1	2	
Dropout Voltage (Note1)	V_{DROP}	I_{OUT} = 100mA		400	720	mV
		I_{OUT} = 250mA		1200	2000	
Enable High Level	V_{ENHI}	IC is enabled	0.9		V_{IN}(Note2)	V
Enable Low Level	V_{ENLO}	IC is shutdown	0		0.4	V
Quiescent Current	I_Q			1.5	2.5	µA
Enable pin Pull High Current	I_{EN}			0.3	1	µA
Current Limit	I_{CL}		270	370		mA
Output Voltage PSRR	PSRR	f = 100Hz, C_{OUT} = 1µF, I_{OUT} = 10mA		60		dB
		f = 1KHz, C_{OUT} = 1µF, I_{OUT} = 100mA		60		
Over Temperature Shutdown	OTS			140		°C
Over Temperature Hysteresis	OTH			20		°C

Note:

(1)Dropout Voltage is measured at V_{OUT} = $V_{OUT(NOM)}$ x 98%

(2)V_{EN} must be <= V_{IN}

■ Detailed Description

The AME8867 family of CMOS regulator contain a PMOS pass transistor, voltage reference, error amplifier, over-current protection thermal shutdown and Power Good detection circuitry.

The P-channel pass transistor receives data from the error amplifier, over-current shutdown and thermal protection circuits. During normal operation, the error amplifier compares the output voltage to a precision reference.

Capacitor Selection and Regulator Stability

The AME8867 is stable with an output capacitor to ground of 1μF or greater. Ceramic capacitors have the lowest ESR and will offer the best AC performance. Conversely, Aluminum Electrolytic capacitor exhibit the highest ESR, resulting in the poorest AC response. Unfortunately, large value ceramic capacitors are comparatively expensive. One option is to parallel a 0.1μF ceramic capacitor with a 10μF Aluminum Electrolytic. The benefit is low ESR, high capacitance and low overall cost.

A second capacitor is recommended between the input and ground to stabilize V_{IN}. The input capacitor should be at least 0.1μF to have a beneficial effect.

Enable Pin

The Enable Pin is Active High. When activated pulled low, the MOS pass transistor shuts off and all internal circuits are powered down. In this state, the standby current is less than 1μA.

This pin can not be floating. V_{EN} must be <= V_{IN}.

The maximum output power of the AME8867 is limited by the maximum power dissipation of the package. By calculation the power dissipation of the package as a function of the input voltage, output voltage and output current, the maximum input voltage can be obtained. The maximum power dissipation should not exceed the package's maximum power rating.

$P_{MAX} = (V_{IN(MAX)}-V_{OUT}) \times I_{OUT}$

Where: $V_{IN(MAX)}$ = maximum input voltage

P_{MAX} = maximum power dissipation of the package

■ Characterization Curve

Output Voltage vs. Input Voltage

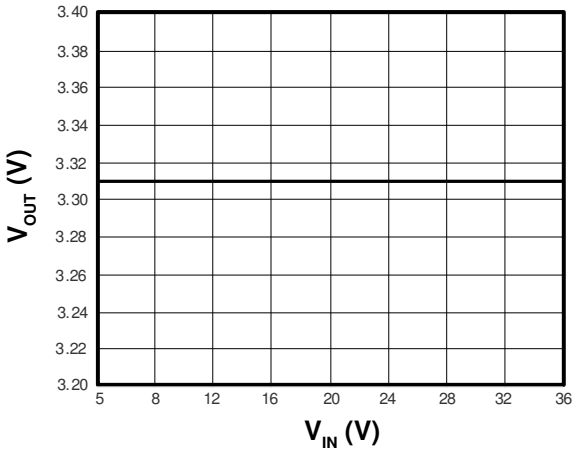

Quiescent Current

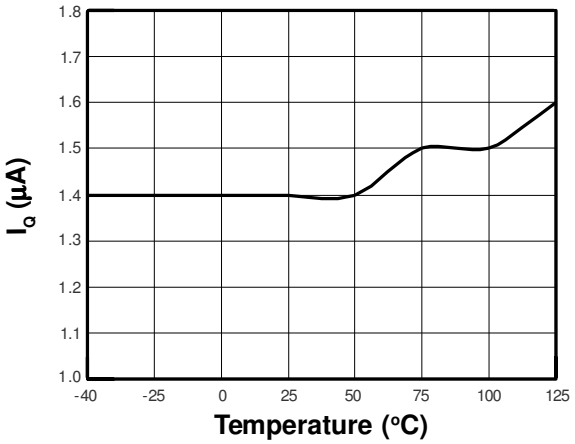

I_Q vs. Input Voltage

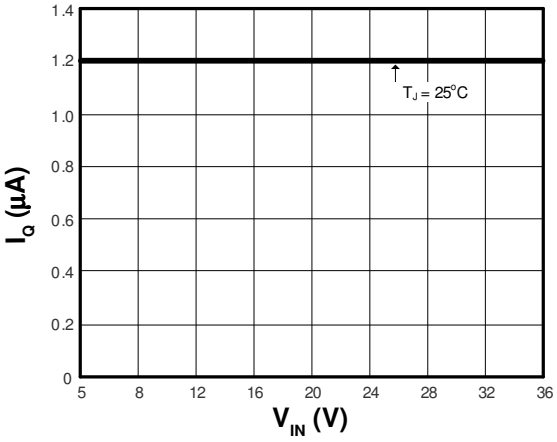

Vout vs Temp

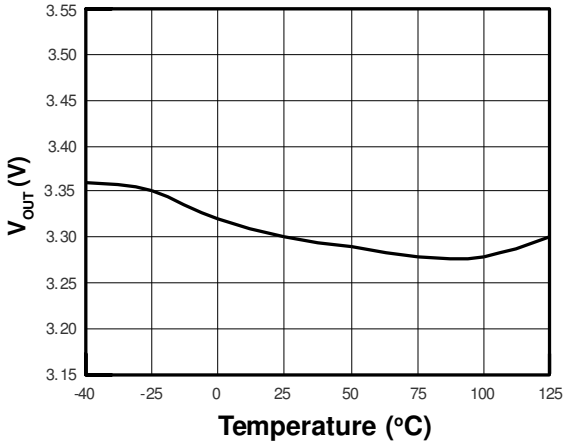

PSRR

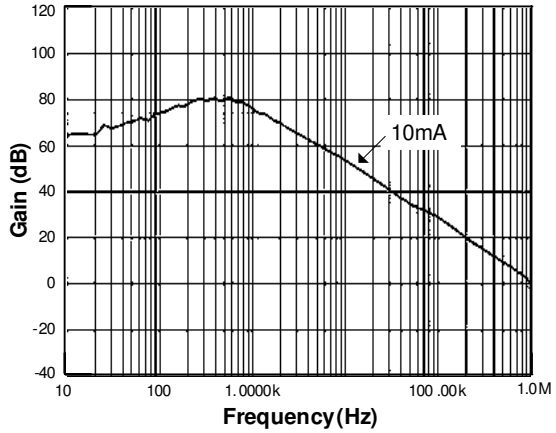

PSRR

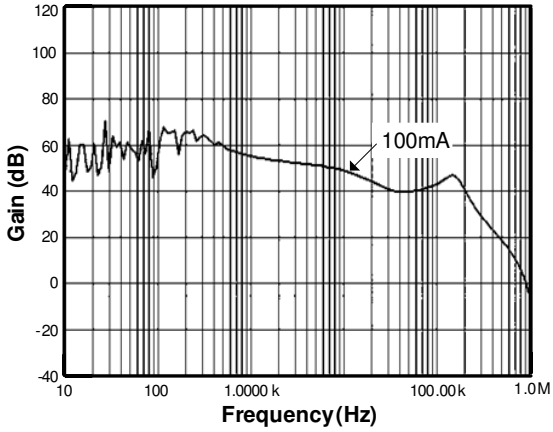

■ Characterization Curve

Line Transient Response

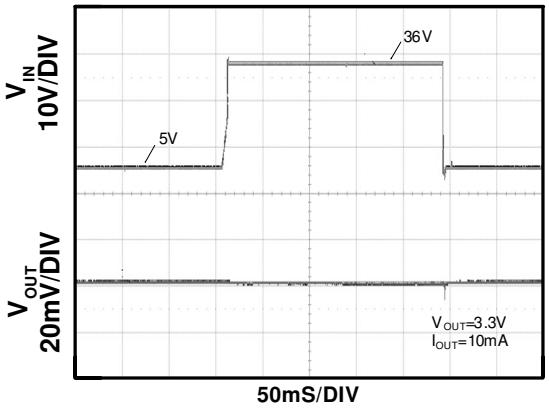

50mS/DIV

Line Transient Response

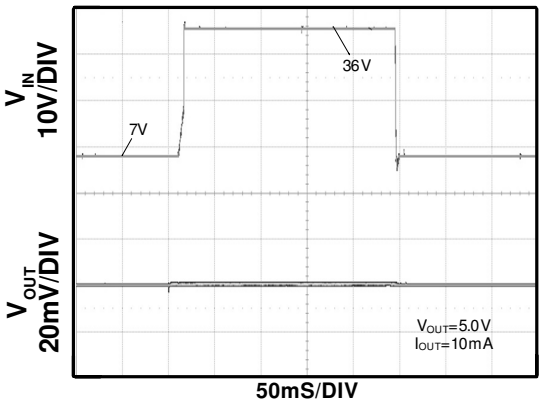

50mS/DIV

Chip Enable Transient Response

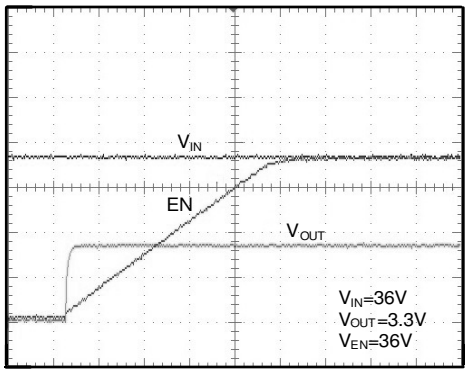

2mS/DIV

1. V_{IN} = 10V/DIV
2. EN = 10V/DIV
3. V_{OUT} = 2V/DIV

Chip Enable Transient Response

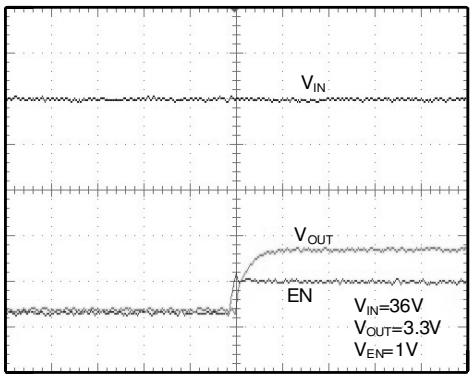

400µS/DIV

1. V_{IN} = 5V/DIV
2. EN = 1V/DIV
3. V_{OUT} = 2V/DIV

Chip Disable Transient Response

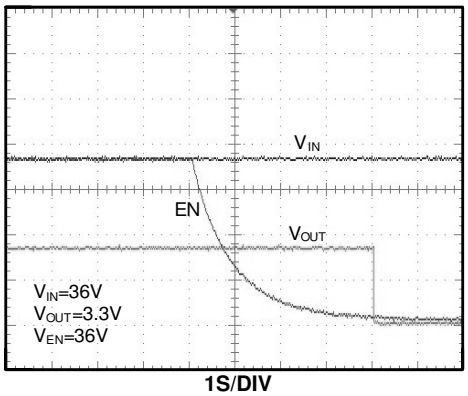

1S/DIV

1. V_{IN} = 10V/DIV
2. EN = 10V/DIV
3. V_{OUT} = 2V/DIV

■ Tape and Reel Dimension

SOT-23

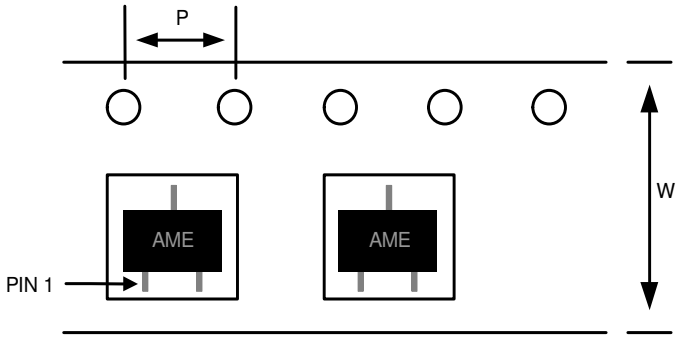

Carrier Tape, Number of Components Per Reel and Reel Size

Package	Carrier Width (W)	Pitch (P)	Part Per Full Reel	Reel Size
SOT-23	8.0±0.1 mm	4.0±0.1 mm	3000pcs	180±1 mm

SOT-89

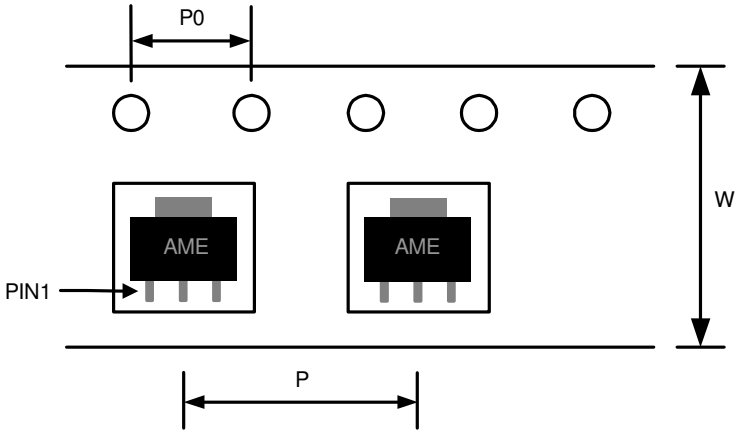

Carrier Tape, Number of Components Per Reel and Reel Size

Package	Carrier Width (W)	Pitch (P)	Pitch (P0)	Part Per Full Reel	Reel Size
SOT-89	12.0±0.1 mm	8.0±0.1 mm	4.0±0.1 mm	1000pcs	180±1 mm

■ Tape and Reel Dimension

SOT-223

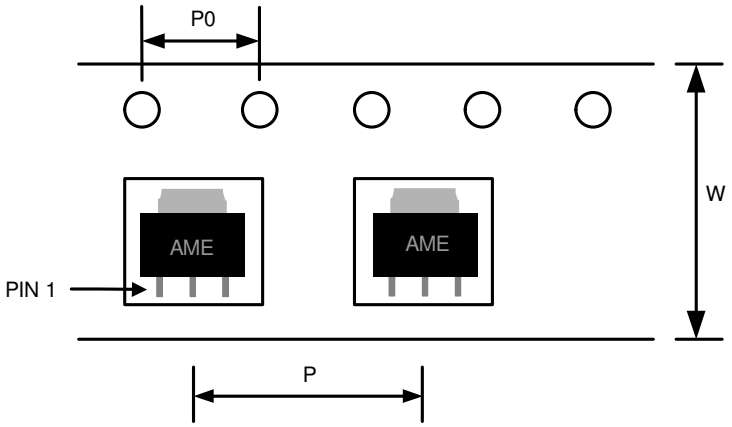

Carrier Tape, Number of Components Per Reel and Reel Size

Package	Carrier Width (W)	Pitch (P)	Pitch (P0)	Part Per Full Reel	Reel Size
SOT-223	12.0±0.1 mm	8.0±0.1 mm	4.0±0.1 mm	2500pcs	330±1 mm

SOT-25

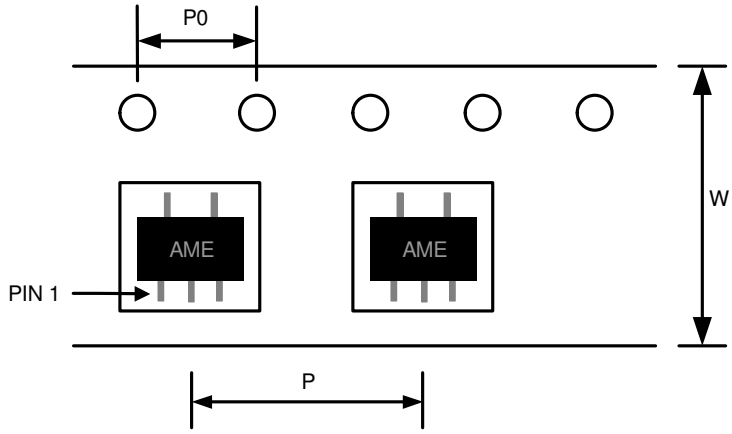

Carrier Tape, Number of Components Per Reel and Reel Size

Package	Carrier Width (W)	Pitch (P)	Pitch (P0)	Part Per Full Reel	Reel Size
SOT-25	8.0±0.1 mm	4.0±0.1 mm	4.0±0.1 mm	3000pcs	180±1 mm

■ Tape and Reel Dimension

SOP-8/PP

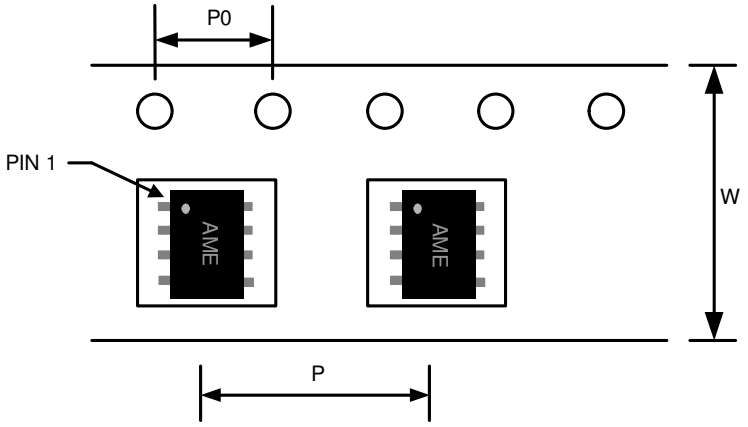

Carrier Tape, Number of Components Per Reel and Reel Size

Package	Carrier Width (W)	Pitch (P)	Pitch (P0)	Part Per Full Reel	Reel Size
SOP-8/PP	12.0±0.1 mm	8.0±0.1 mm	4.0±0.1 mm	2500pcs	330±1 mm

■ Package Dimension

SOT-23

Top View

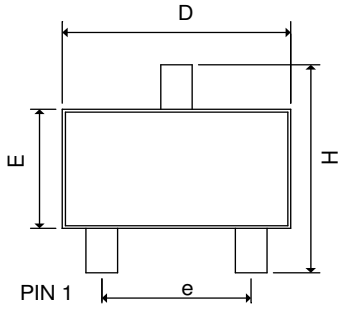

Side View

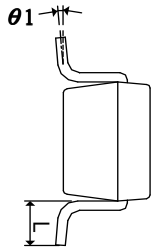

Front View

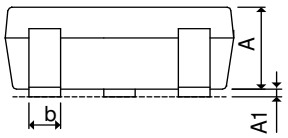

SYMBOLS	MILLIMETERS		INCHES	
	MIN	MAX	MIN	MAX
A	0.90	1.40	0.0354	0.0551
A_1	0.00	0.15	0.0000	0.0059
b	0.30	0.50	0.0118	0.0197
D	2.70	3.10	0.1063	0.1220
E	1.40	1.80	0.0551	0.0709
e	1.90 BSC		0.0748 BSC	
H	2.40	3.00	0.0945	0.1181
L	0.35BSC		0.0138 BSC	
θ1	0°	10°	0°	10°

■ Lead Pattern Drawing

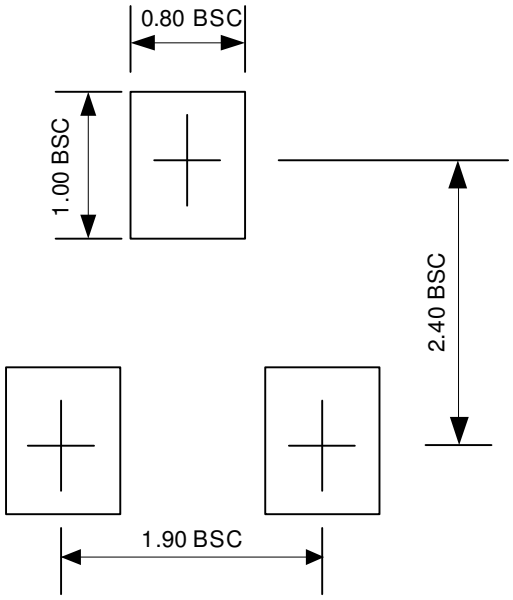

Note:

1. Lead pattern unit description:
   BSC: Basic. Represents theoretical exact dimension or dimension target.
2. Dimensions in Millimeters.
3. General tolerance ±0.05mm unless otherwise specified.

■ Package Dimension

SOT-89

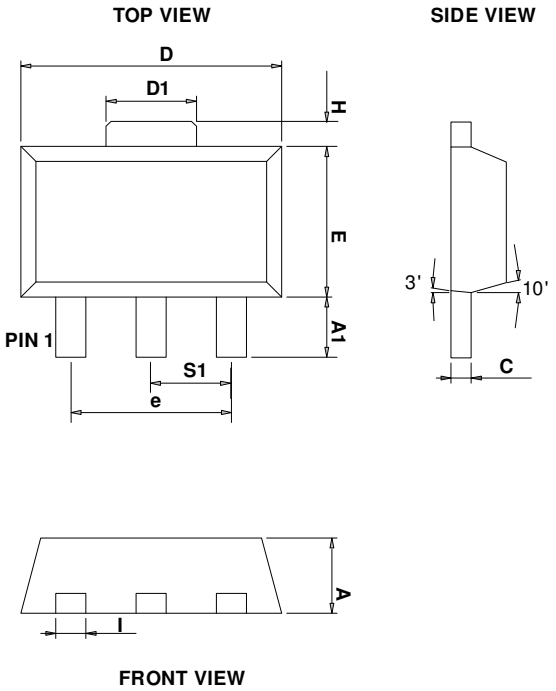

SYMBOLS	MILLIMETERS		INCHES	
	MIN	MAX	MIN	MAX
A	1.39	1.60	0.0547	0.0630
A_1	0.8 REF		0.0315 REF	
C	0.35	0.44	0.0138	0.0173
D	4.39	4.60	0.1728	0.1811
D_1	1.35	1.85	0.0531	0.0728
E	2.28	2.60	0.0898	0.1024
I	0.32	0.56	0.0126	0.0220
e	3.00 REF		0.1181 REF	
H	0.70 REF		0.0276 REF	
S1	1.50 REF		0.0591 REF	

■ Lead Pattern

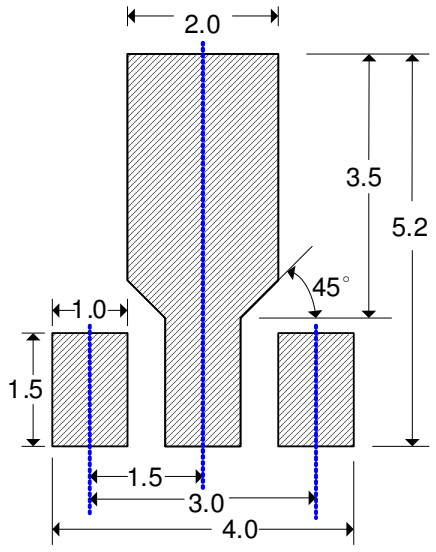

Note:

1. Dimensions in Millimeters.
2. General tolerance ±0.05mm unless otherwise specified.

■ Package Dimension (Contd.)

SOT-223

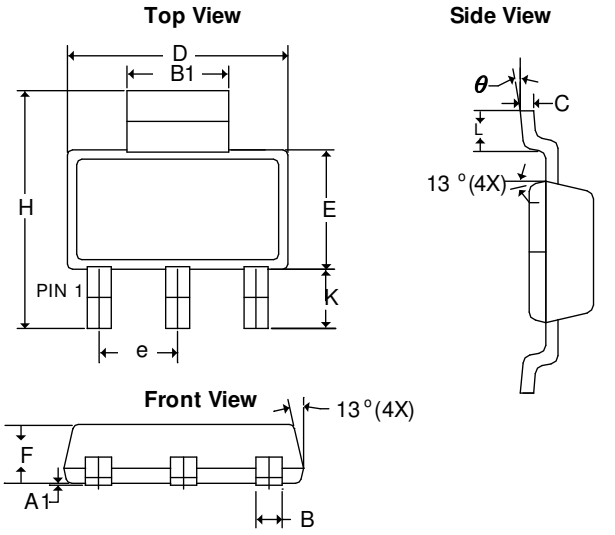

SYMBOLS	MILLIMETERS		INCHES	
	MIN	MAX	MIN	MAX
A_1	0.01	0.10	0.0004	0.0039
B	0.60	0.84	0.0236	0.0330
B_1	2.90	3.15	0.1140	0.1240
C	0.24	0.38	0.0094	0.0150
D	6.20	6.71	0.2441	0.2640
E	3.30	3.71	0.1299	0.1460
e	2.30 BSC		0.0906 BSC	
F	1.40	1.80	0.0551	0.0709
H	6.70	7.30	0.2638	0.2874
θ	0°	10°	0°	10°

■ Lead Pattern

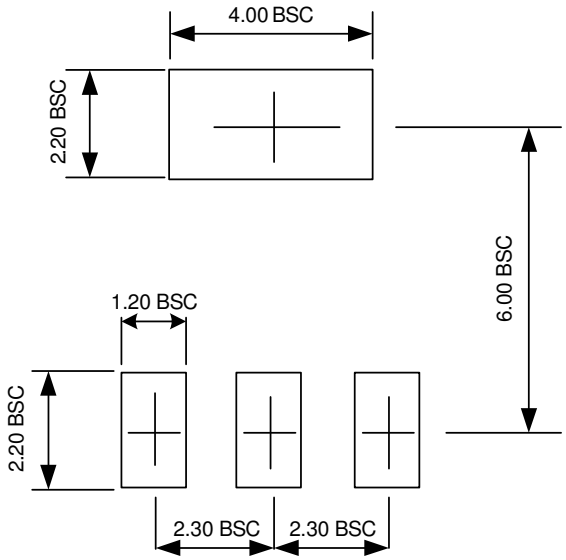

Note:

1. Lead pattern unit description:
   BSC: Basic. Represents theoretical exact dimension or dimension target.
2. Dimensions in Millimeters.
3. General tolerance ±0.05mm unless otherwise specified.

■ Package Dimension (Contd.)

SOT-25

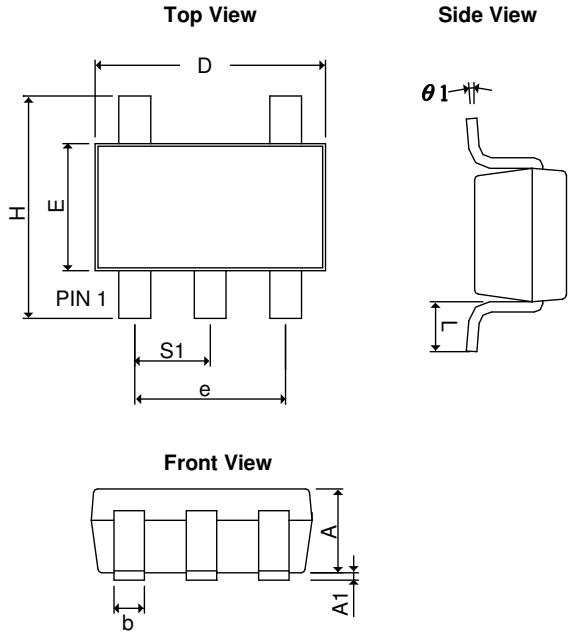

SYMBOLS	MILLIMETERS		INCHES	
	MIN	MAX	MIN	MAX
A	0.90	1.30	0.0354	0.0512
A_1	0.00	0.15	0.0000	0.0059
b	0.30	0.55	0.0118	0.0217
D	2.70	3.10	0.1063	0.1220
E	1.40	1.80	0.0551	0.0709
e	1.90 BSC		0.0748 BSC	
H	2.60	3.00	0.1024	0.1181
L	0.37 BSC		0.0146 BSC	
θ1	0°	10°	0°	10°
S_1	0.95 BSC		0.0374 BSC	

■ Lead Pattern

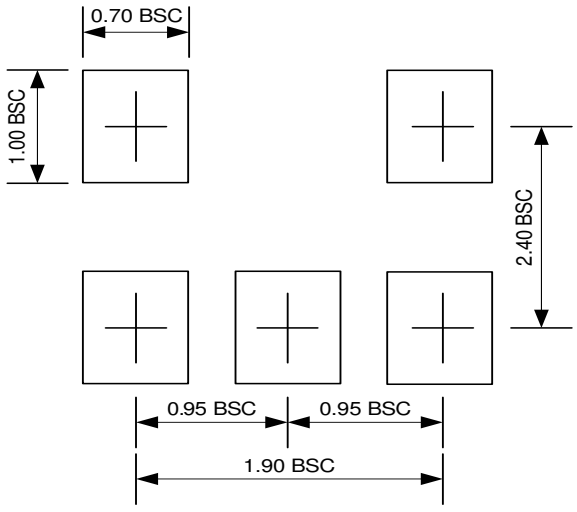

Note:

1. Lead pattern unit description:
   BSC: Basic. Represents theoretical exact dimension or dimension target.
2. Dimensions in Millimeters.
3. General tolerance ±0.05mm unless otherwise specified.

■ Package Dimension

SOP-8/PP

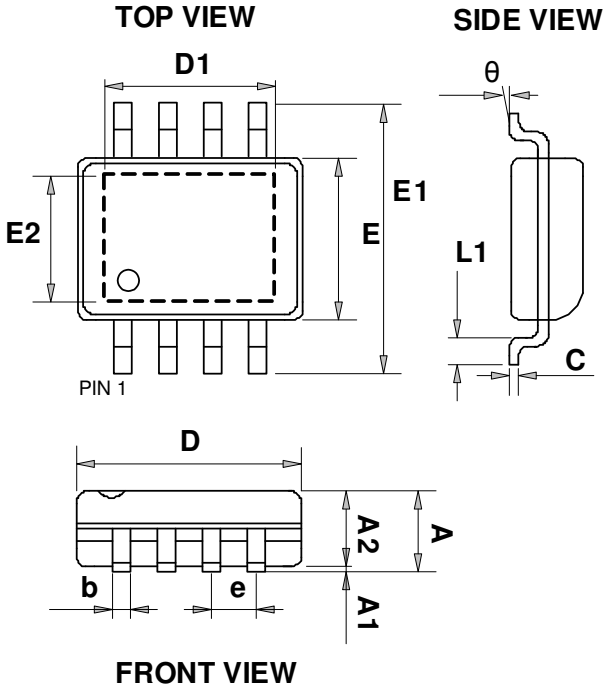

SYMBOLS	MILLIMETERS		INCHES	
	MIN	MAX	MIN	MAX
A	1.350	1.750	0.053	0.069
A1	0.000	0.150	0.000	0.006
A2	1.350	1.600	0.053	0.063
C	0.100	0.250	0.004	0.010
E	3.750	4.150	0.148	0.163
E1	5.700	6.300	0.224	0.248
L1	0.300	1.270	0.012	0.050
b	0.310	0.510	0.012	0.020
D	4.720	5.120	0.186	0.202
e	1.270 BSC		0.050 BSC	
θ	0°	8°	0°	8°
E2	2.150	2.513	0.085	0.099
D1	2.150	3.402	0.085	0.134

■ Lead Pattern

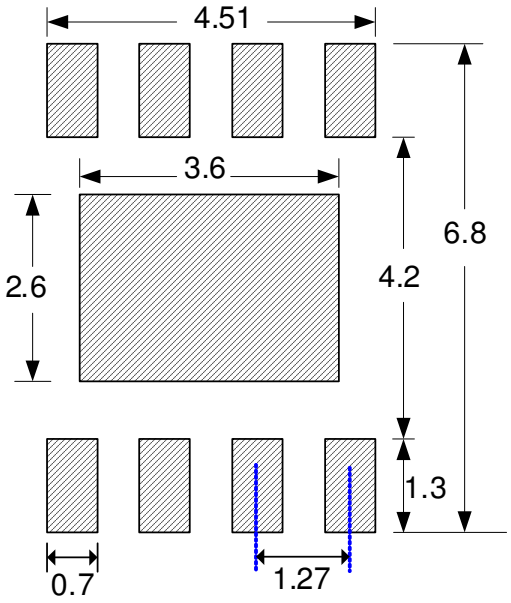

Note:

1. Dimensions in Millimeters.
2. General tolerance ±0.05mm unless otherwise specified.



www.ame.com.tw
E-Mail: sales@ame.com.tw

Life Support Policy:
These products of AME, Inc. are not authorized for use as critical components in life-support devices or systems, without the express written approval of the president of AME, Inc.

AME, Inc. reserves the right to make changes in the circuitry and specifications of its devices and advises its customers to obtain the latest version of relevant information.

© AME, Inc. , November 2022

Document: A037B-DS8867-D.01

Corporate Headquarter

AME, Inc.

8F-1, 12 WenHu St., Nei-Hu
Taipei 114, Taiwan .
Tel: 886 2 2627-8687
Fax: 886 2 2659-2989