YOKE®

APPROVAL SHEET

佳世達科技股份有限公司
(鈺緯科技開發股份有限公司)

Item : S3225A Crystal

Spec. no : S3225A-012000-F18-YYC-1AQA

Freq : 12.000 MHz

P/N: 8B.31200.20A / 3ZCR120A46Y

DIVA 文件編號: Z0547

Customer Approved	Checked By	Issued By
設計驗證 工程課 2025 -06- 16 發行 鈺緯科技開發股份有限公司	陳慧美	謝秋霞

請自發行日起2週內簽回此份規格書，若未簽回，則視為同意此規格。

友桂電子股份有限公司

YOKETAN CORPORATION

E-mail: yoketec@ms14.hinet.net http:// www.yoketant.com.tw

台灣台中工廠 : (42760)	(一廠)台中市潭子區台中加工出口區南二路28號-2	Tel: 886-4-25333353	Fax: 886-4-25338675
	(二廠)台中市潭子區台中加工出口區南二路12號	Tel: 886-4-25333353	Fax: 886-4-25338675
台灣台北公司 : (24250)	新北市新莊區新北大道三段5號9樓之3	Tel: 886-2-85227548	Fax: 886-2-85227546
中國深圳公司 : (518112)	深圳市龍崗區布吉街道百合星城百合酒店及住宅樓D棟15I	Tel: 86-755-25936978	Fax: 86-755-25907970
中國無錫公司 : (214011)	無錫市崇安區廣益路291號哥倫布廣場A座708室	Tel: 86-510-88708842	Fax: 86-510-88211895

RoHS Compliant

SYSTEM CERTIFICATION IECQ HSPM SGS · SYSTEM CERTIFICATION IATF 16949 SGS · SYSTEM CERTIFICATION ISO 9001 SGS · SYSTEM CERTIFICATION ISO 14001 SGS · UKAS MANAGEMENT SYSTEMS 0005

YOKE®

REVISION HISTORY

Rev.	Revise page	Revise Contents	Date	Ref.No.	Reviser
A	N/A	INITIAL ISSUE	2013/8/6	N/A	Aki Hsieh
A.1	Page.1	Add：鈺緯科技開發股份有限公司	2025/6/10	N/A	Chien
A.1	Page.1	Add P/N: 8B.31200.20A / 3ZCR120A46Y	2025/6/10	N/A	Chien
A.2	Page.12-20	Add SGS Report	2025/6/11	N/A	Chien

SPECIFICATION OF CRYSTAL UNITS YOKETAN CORP.

Customer : 佳世達

SPEC NO : S3225A-012000-F18-YYC-1AQA

Date : 6-Aug-13

1 General

1-1 Enclosure:	S3225A (Lead Free Parts)
1-2 Application:	
1-3 Overtone Order :	Fundamental
1-4 Crystal unit Frequency :	12.000 MHz
1-5 Frequency Deviation :	
1-5-1 At Reference Temperature :	±30ppm at 25 ± 3℃
1-5-2 At Operating Temperature :	±30ppm in 1-6(Refer to 25 Deg. C)
1-6 Operating Temperature Range :	-20℃ to +70℃
1-7 Storage Temperature Range :	-55℃ to +125℃
1-8 Unit Net of Weight :	0.020716g±5%

2 Circuit

2-1 Circuit :	250B
2-2 Load Capacitance :	18pF±0.3pF
2-3 Level of Drive :	50uW(Max.)

3 Electrical Performance

3-1 Equivalent Series Resistance:	Less than 80 ohms
3-2 Shunt Capacitance (C0):	3.5pF Max.
3-3 Insulation Resistance :	More than 500Mohms at DC100V
3-4 Aging:	±5ppm/year Max.

4 Marking

12.000
• YOKE ym

12.000 : Freq.
• : crystal
: YOKE
y : YEAR
m : MONTH

CODE	YEAR	CODE	MONTH
8	2008	A	Jan.
9	2009	B	Feb.
0	2010	C	Mar.
1	2011	D	Apr.
2	2012	E	May.
3	2013	F	Jun.
4	2014	G	Jul.
5	2015	H	Aug.
6	2016	I	Sep.
7	2017	J	Oct.
8	2018	K	Nov.
9	2019	L	Dec.

SPECIFICATION OF CRYSTAL UNITS YOKETAN CORP.

Dimensions

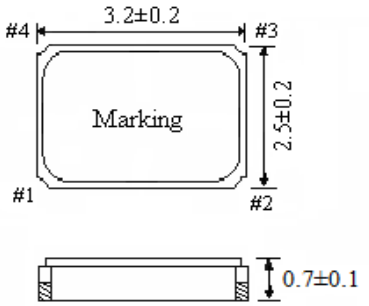

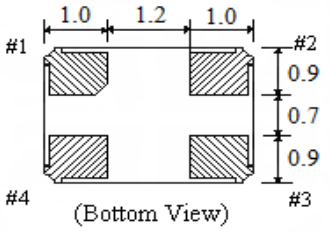

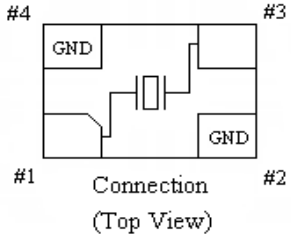

Recommended Soldering Pattern

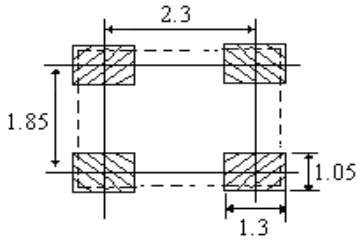

	Date	Name	Unit : mm	
Drawn	21.Dec.2016	Leo	Title	Drawing No.
Checked	21.Dec.2016	Iris	Dimension of External	PKX-322507-1221
Approved	21.Dec.2016	Wan		

Soldering Reflow

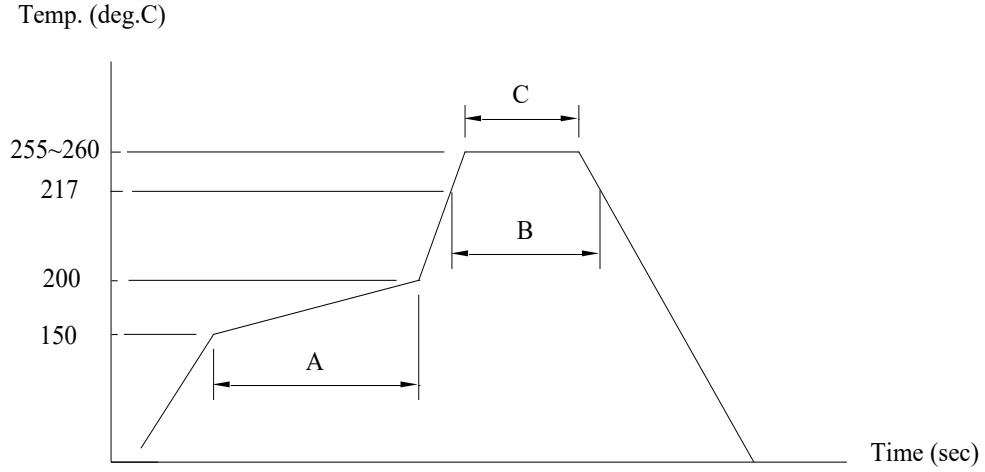

(A)→Preheating area : 150~200°C, 60~120sec.
(B)→Heating area : 217°C, 60~150sec.
(C)→Peak temperature : 255~260°C, 30sec. Max.
Ramp-up rate (217→260°C) : 3°C/sec. Max.
Ramp-down rate (260→217°C) : 6°C/sec. Max.
Time 25°C→260°C : 480sec. Max.
*Referance JEDEC J-STD-020

Note1:
The crystal characteristics may be affected and destroyed at worst by additional production process as ultrasonic welding or molding encapsulation…. Please be sure to check if this process affects any damage to crystal products prior to use.

Note2:
In order to avoid the seasonal shortage of main raw materials, YOKE standard products have second source mechanism and without notice!

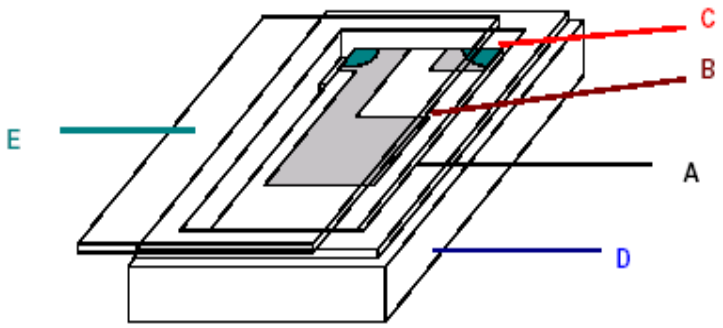

結 構 示 意 圖 :

代号	名 稱 Name	材料 Material
A	晶片 Blank	水晶棒 Synthetic quartz
B	電極 Electrode	銀 Ag
C	銀膠 Conductive bonding	矽 Ag Silicon Bonding
D	基座 Package	陶瓷 Ceramic
E	上蓋 Lid	鐵鈷鎳合金 KOVAR

SPECIFICATION OF CRYSTAL UNITS YOKETAN CORP.

Code of Spec No.

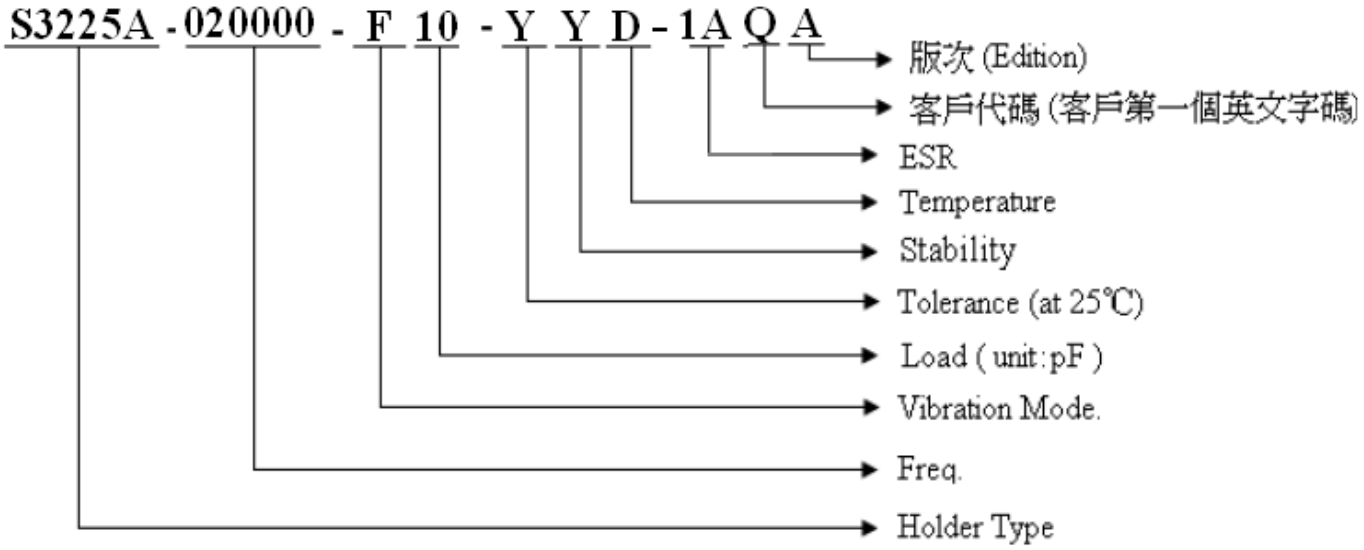

SPECIFICATION OF CRYSTAL & OSC UNITS YOKETAN CORP.

Reliability Test (applicable to SMD type OSC and X'tal)

Condition B

Test Item	Test Condition	Requrirement	
		General OSC (Note:1)	General X'tal (Note:2)
1. Gross Leak	Electronic test fluid 125℃/30sec	No continuous bubble	
2. Fine Leak	Bombing of He 4.5kg/cm^2 for 1.5 hours	Less than 1*10^-8atm.c.c./sec, Helium	
3. Drop	a. ~19.999MHz(Fund.) →75 cm height b. 20 ~ MHz (Fund.)→50 cm height on hard wooden surface / 3 times (thickness more than 30 mm)	△F≦±10ppm , Duty within spec.	△F≦±10ppm , △ESR≦±10ohms
4. Vibration	Freq. range: 10~55Hz Peak to peak amplitude:1.5mm 3 direction(X,Y,Z)，each 120min.	△F≦±10ppm , Duty within spec.	△F≦±10ppm , △ESR≦±10ohms
5. Resistance to Soldering Heat	IR reflow as YOKE STD 260±5°C / 10 sec. Max., Test 2 times	△F≦±10ppm , Duty within spec.	△F≦±10ppm , △ESR≦±10ohms
6. Shearing	Weight : 5N, Test duration : 10±1 sec	△F≦±10ppm , Duty within spec.	△F≦±10ppm , △ESR≦±10ohms
7. Low Temp. Exposure	-40±3℃, 240±12 hours	△F≦±10ppm , Duty within spec.	△F≦±10ppm , △ESR≦±10ohms
8. Aging	125±3℃, 240±12 hours	△F≦±10ppm , Duty within spec.	△F≦±10ppm , △ESR≦±10ohms
9. High Temp. & Humidity	+85℃±5℃& 85%±5% R.H. , 240±12 hours	△F≦±10ppm , Duty within spec.	△F≦±10ppm , △ESR≦±10ohms
10. Temperature Cycling	-40±3℃/15±3min ~ +125±3℃/15±3min 15cycles	△F≦±10ppm , Duty within spec.	△F≦±10ppm , △ESR≦±10ohms
11. Substrate Bending	Test duration : 5±1 sec Amount of substrate : 3mm	△F≦±10ppm , Duty within spec.	△F≦±10ppm , △ESR≦±10ohms

Note:1 → For communication application the spec. demanded **"△F≦±5 ppm, Duty within spec."**。

Note:2 → For communication application the spec. demanded **"△F≦±5 PPM, △ESR≦±5 ohms "**。

SPECIFICATION OF TAPE & REEL YOKETAN CORP.

Taping

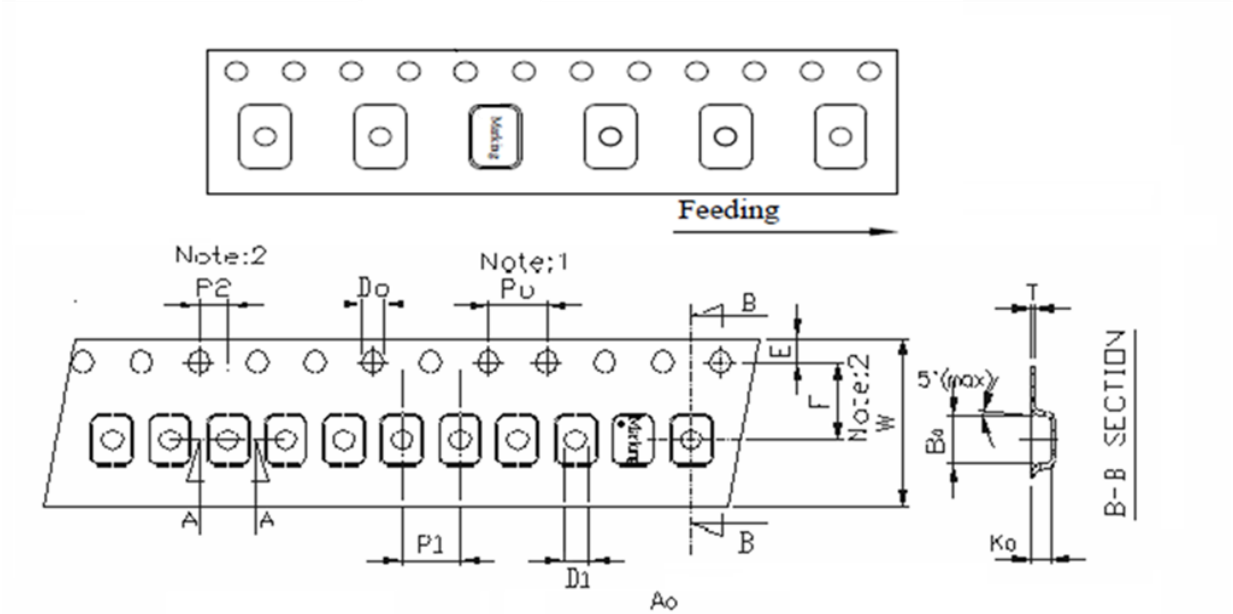

Ao = 2.70±0.10 mm

Bo = 3.40±0.10 mm

Ko = 1.0±0.10 mm

Unit: mm

Symbol	Spec.
K1	–
Po	4.0±0.10
P1	4.0±0.10
P2	2.0±0.10
Do	1.55±0.05
D1	1.0 (MIN)
E	1.75±0.10
F	3.50±0.10
10Po	40.0±0.10
W	8.0±0.20
T	0.25±0.05

Notice:

1. 10 Sprocket hole pitch cumulative tolerance is ±0.1mm
2. Pocket position relative to sprocket hole measured as true position of pocket not pocket hole.
3. Ao & Bo measured on a place 0.3mm above the bottom of the pocket to top surface of the carrier.
4. Ko measured from a plane on the inside bottom of the pocket to the top surface of the carrier.
5. Carrier camber shall be not than 1mm per 100mm through a length of 250mm.

	Date	Name	Unit : mm	
Drawn	23.Sep.2024	Leo	Title	Drawing No.
Checked	23.Sep.2024	Iris	**Tape & Reel Dimension**	**C009-020310-X-1106-1**
Approved	23.Sep.2024	Wan		

SPECIFICATION OF TAPE & REEL YOKETAN CORP.

Reel

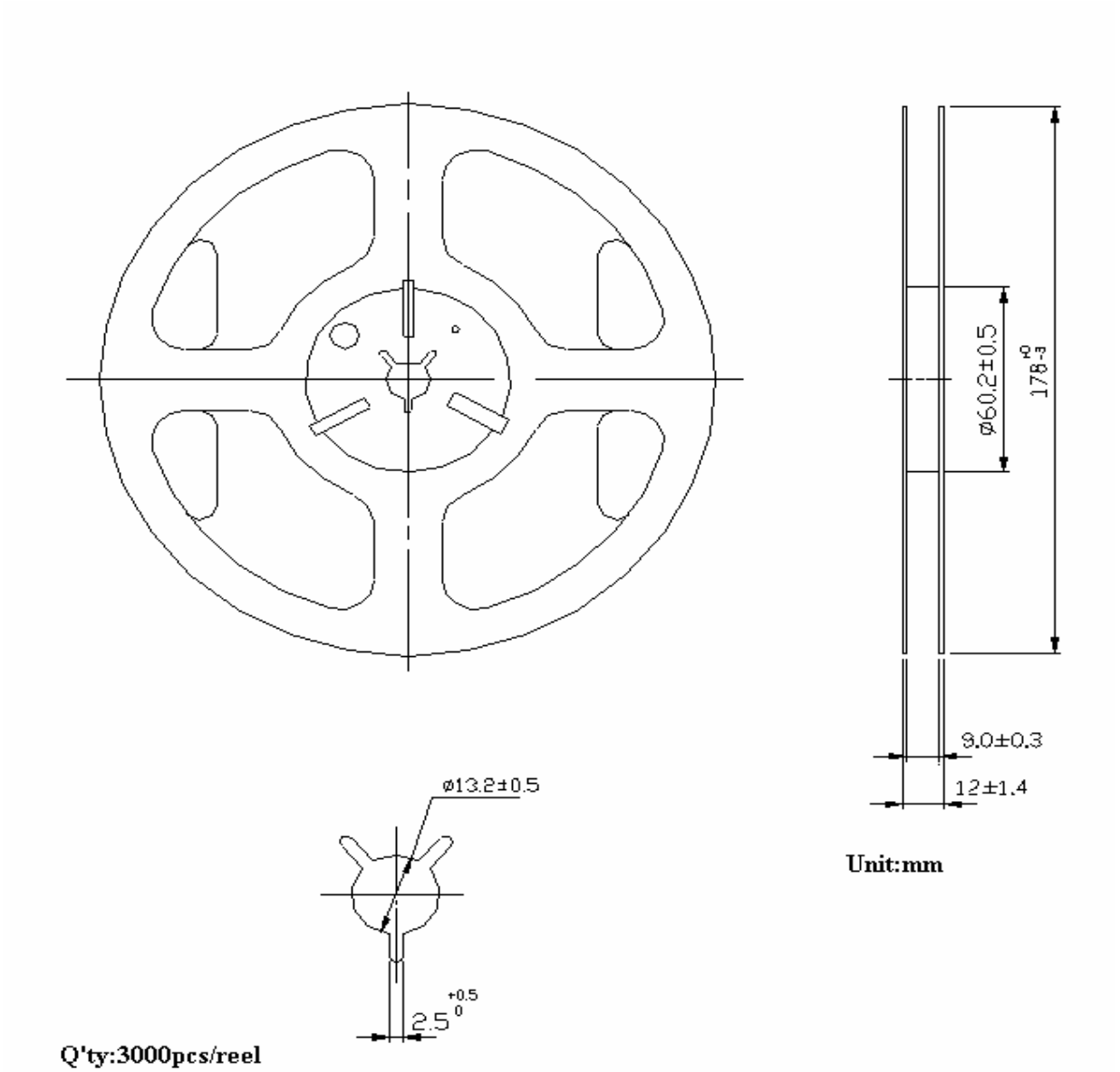

Unit:mm

Q'ty:3000pcs/reel

	Date	Name	Unit : mm	
Drawn	**22.Jan.2007**	Leo	Title	Drawing No.
Checked	**22.Jan.2007**	Iris	**Tape & Reel Dimension**	**C009-0709-A-1001**
Approved	**22.Jan.2007**	Wan		

SPECIFICATION OF PAKAGE YOKETAN CORP.

Package

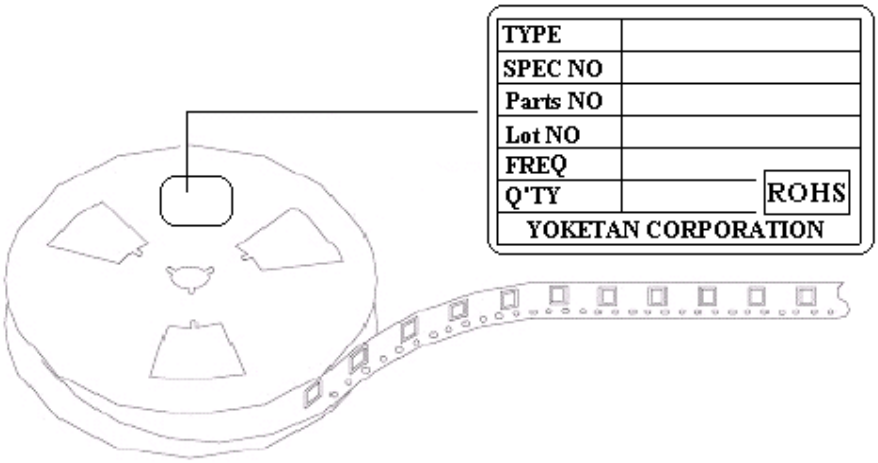

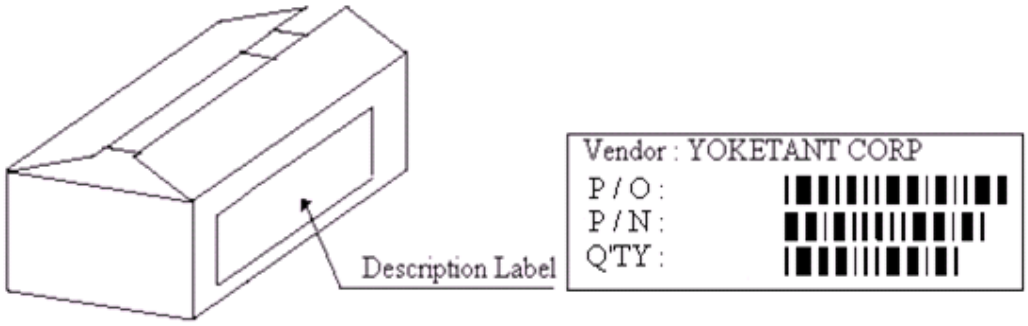

(Box)

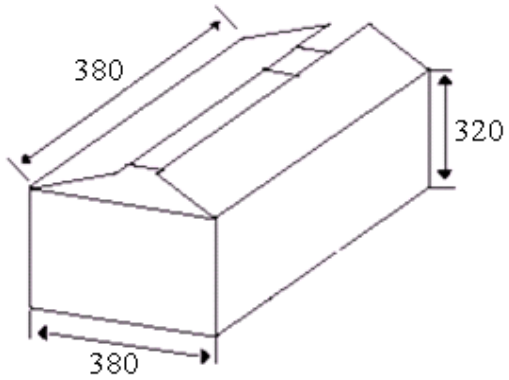

Box Size (mm)

REEL Q'TY	LENGTH	WIDTH	HEIGHT
56reels	380	380	320

56 Reels in on box, total168000pcs.

簽名有效
For Question, Please
Contact with SGS
www.sgs.com.tw

測試報告
Test Report

友桂電子股份有限公司 (YOKETAN CORPORATION)
台中市潭子區南二路28號之2 (NO. 28-2, SOUTH 2ND RD., TANZI DISTRICT, TAICHUNG CITY, TAIWAN, R.O.C.)

以下測試樣品係由申請廠商所提供及確認 (The following sample(s) was/were submitted and identified by the applicant as)：

送樣廠商(Sample Submitted By)	:	友桂電子股份有限公司 (YOKETAN CORPORATION)
樣品名稱(Sample Name)	:	SMD CRYSTAL

==========

收件日(Sample Receiving Date)	:	09-Dec-2024
測試期間(Testing Period)	:	09-Dec-2024 to 16-Dec-2024

測試需求(Test Requested) :

(1) 依據客戶指定，測試鎘、鉛、汞、六價鉻、多溴聯苯、多溴聯苯醚, DBP, BBP, DEHP, DIBP。 (As specified by client, to test Cadmium, Lead, Mercury, Cr(VI), PBBs, PBDEs, DBP, BBP, DEHP, DIBP contents in the submitted sample(s).)

(2) 依據客戶指定，測試鹵素-氟、氯、溴、碘。 (As specified by client, to test Halogen-Fluorine, Chlorine, Bromine, Iodine in the submitted sample.)

測試結果(Test Results) : 請參閱下一頁 (Please refer to following pages.)

Troy Chang / Department Manager
Signed for and on behalf of
SGS TAIWAN LTD.
Chemical Laboratory - Taipei

PIN CODE: 14ACFAEB

This document is issued by the Company subject to its General Conditions of Service printed overleaf, available on request or accessible at https://www.sgs.com.tw/terms-of-service and, for electronic format documents, subject to Terms and Conditions for Electronic Documents at https://www.sgs.com.tw/terms-of-service. Attention is drawn to the limitation of liability, indemnification and jurisdiction issues defined therein. Any holder of this document is advised that information contained hereon reflects the Company's findings at the time of its intervention only and within the limits of client's instruction, if any. The Company's sole responsibility is to its Client and this document does not exonerate parties to a transaction from exercising all their rights and obligations under the transaction documents. This document cannot be reproduced, except in full, without prior written approval of the Company. Any unauthorized alteration, forgery or falsification of the content or appearance of this document is unlawful and offenders may be prosecuted to the fullest extent of the law. Unless otherwise stated the results shown in this test report refer only to the sample(s) tested.

測試報告
Test Report

友桂電子股份有限公司 (YOKETAN CORPORATION)
台中市潭子區南二路28號之2 (NO. 28-2, SOUTH 2ND RD., TANZI DISTRICT, TAICHUNG CITY, TAIWAN, R.O.C.)

測試部位敘述 (Test Part Description)

No.1 : 整體混測 (MIXED ALL PARTS)

測試結果 (Test Results)

測試項目 (Test Items)	測試方法 (Method)	單位 (Unit)	MDL	結果 (Result)
				No.1
鎘 (Cd) (Cadmium (Cd))	參考IEC 62321-5: 2013，以感應耦合電漿發射光譜儀分析。(With reference to IEC 62321-5: 2013, analysis was performed by ICP-OES.)	mg/kg	2	n.d.
鉛 (Pb) (Lead (Pb))		mg/kg	2	n.d.
汞 (Hg) (Mercury (Hg))	參考IEC 62321-4: 2013+ AMD1: 2017，以感應耦合電漿發射光譜儀分析。(With reference to IEC 62321-4: 2013+ AMD1: 2017, analysis was performed by ICP-OES.)	mg/kg	2	n.d.
六價鉻 Cr(VI) (Hexavalent Chromium Cr(VI))	參考IEC 62321-7-2: 2017，以紫外光-可見光分光光度計分析。(With reference to IEC 62321-7-2: 2017, analysis was performed by UV-VIS.)	mg/kg	8	n.d.
一溴聯苯 (Monobromobiphenyl)	參考IEC 62321-6: 2015，以氣相層析儀/質譜儀分析。(With reference to IEC 62321-6: 2015, analysis was performed by GC/MS.)	mg/kg	5	n.d.
二溴聯苯 (Dibromobiphenyl)		mg/kg	5	n.d.
三溴聯苯 (Tribromobiphenyl)		mg/kg	5	n.d.
四溴聯苯 (Tetrabromobiphenyl)		mg/kg	5	n.d.
五溴聯苯 (Pentabromobiphenyl)		mg/kg	5	n.d.
六溴聯苯 (Hexabromobiphenyl)		mg/kg	5	n.d.
七溴聯苯 (Heptabromobiphenyl)		mg/kg	5	n.d.
八溴聯苯 (Octabromobiphenyl)		mg/kg	5	n.d.
九溴聯苯 (Nonabromobiphenyl)		mg/kg	5	n.d.
十溴聯苯 (Decabromobiphenyl)		mg/kg	5	n.d.
多溴聯苯總和 (Sum of PBBs)		mg/kg	-	n.d.

This document is issued by the Company subject to its General Conditions of Service printed overleaf, available on request or accessible at https://www.sgs.com.tw/terms-of-service and, for electronic format documents, subject to Terms and Conditions for Electronic Documents at https://www.sgs.com.tw/terms-of-service. Attention is drawn to the limitation of liability, indemnification and jurisdiction issues defined therein. Any holder of this document is advised that information contained hereon reflects the Company's findings at the time of its intervention only and within the limits of client's instruction, if any. The Company's sole responsibility is to its Client and this document does not exonerate parties to a transaction from exercising all their rights and obligations under the transaction documents. This document cannot be reproduced, except in full, without prior written approval of the Company. Any unauthorized alteration, forgery or falsification of the content or appearance of this document is unlawful and offenders may be prosecuted to the fullest extent of the law. Unless otherwise stated the results shown in this test report refer only to the sample(s) tested.

友桂電子股份有限公司 (YOKETAN CORPORATION)
台中市潭子區南二路28號之2 (NO. 28-2, SOUTH 2ND RD., TANZI DISTRICT, TAICHUNG CITY, TAIWAN, R.O.C.)

測試項目 (Test Items)	測試方法 (Method)	單位 (Unit)	MDL	結果 (Result)
				No.1
一溴聯苯醚 (Monobromodiphenyl ether)	參考IEC 62321-6: 2015，以氣相層析儀/質譜儀分析。(With reference to IEC 62321-6: 2015, analysis was performed by GC/MS.)	mg/kg	5	n.d.
二溴聯苯醚 (Dibromodiphenyl ether)		mg/kg	5	n.d.
三溴聯苯醚 (Tribromodiphenyl ether)		mg/kg	5	n.d.
四溴聯苯醚 (Tetrabromodiphenyl ether)		mg/kg	5	n.d.
五溴聯苯醚 (Pentabromodiphenyl ether)		mg/kg	5	n.d.
六溴聯苯醚 (Hexabromodiphenyl ether)		mg/kg	5	n.d.
七溴聯苯醚 (Heptabromodiphenyl ether)		mg/kg	5	n.d.
八溴聯苯醚 (Octabromodiphenyl ether)		mg/kg	5	n.d.
九溴聯苯醚 (Nonabromodiphenyl ether)		mg/kg	5	n.d.
十溴聯苯醚 (Decabromodiphenyl ether)		mg/kg	5	n.d.
多溴聯苯醚總和 (Sum of PBDEs)		mg/kg	-	n.d.
鄰苯二甲酸丁苯甲酯 (BBP) (Butyl benzyl phthalate (BBP))	參考IEC 62321-8: 2017，以氣相層析儀/質譜儀分析。(With reference to IEC 62321-8: 2017, analysis was performed by GC/MS.)	mg/kg	50	n.d.
鄰苯二甲酸二丁酯 (DBP) (Dibutyl phthalate (DBP))		mg/kg	50	n.d.
鄰苯二甲酸二異丁酯 (DIBP) (Diisobutyl phthalate (DIBP))		mg/kg	50	n.d.
鄰苯二甲酸二(2-乙基己基)酯 (DEHP) (Di-(2-ethylhexyl) phthalate (DEHP))		mg/kg	50	n.d.
氟 (F) (Fluorine (F)) (CAS No.: 14762-94-8)	參考BS EN 14582: 2016，以離子層析儀分析。(With reference to BS EN 14582: 2016, analysis was performed by IC.)	mg/kg	50	n.d.
氯 (Cl) (Chlorine (Cl)) (CAS No.: 22537-15-1)	參考BS EN 14582: 2016，以離子層析儀分析。(With reference to BS EN 14582: 2016, analysis was performed by IC.)	mg/kg	50	n.d.
溴 (Br) (Bromine (Br)) (CAS No.: 10097-32-2)	參考BS EN 14582: 2016，以離子層析儀分析。(With reference to BS EN 14582: 2016, analysis was performed by IC.)	mg/kg	50	n.d.
碘 (I) (Iodine (I)) (CAS No.: 14362-44-8)	參考BS EN 14582: 2016，以離子層析儀分析。(With reference to BS EN 14582: 2016, analysis was performed by IC.)	mg/kg	50	n.d.

This document is issued by the Company subject to its General Conditions of Service printed overleaf, available on request or accessible at https://www.sgs.com.tw/terms-of-service and, for electronic format documents, subject to Terms and Conditions for Electronic Documents at https://www.sgs.com.tw/terms-of-service. Attention is drawn to the limitation of liability, indemnification and jurisdiction issues defined therein. Any holder of this document is advised that information contained hereon reflects the Company's findings at the time of its intervention only and within the limits of client's instruction, if any. The Company's sole responsibility is to its Client and this document does not exonerate parties to a transaction from exercising all their rights and obligations under the transaction documents. This document cannot be reproduced, except in full, without prior written approval of the Company. Any unauthorized alteration, forgery or falsification of the content or appearance of this document is unlawful and offenders may be prosecuted to the fullest extent of the law. Unless otherwise stated the results shown in this test report refer only to the sample(s) tested.

友桂電子股份有限公司 (YOKETAN CORPORATION)
台中市潭子區南二路28號之2 (NO. 28-2, SOUTH 2ND RD., TANZI DISTRICT, TAICHUNG CITY, TAIWAN, R.O.C.)

備註(Note)：

1. mg/kg = ppm；0.1wt% = 0.1% = 1000ppm
2. MDL = Method Detection Limit (方法偵測極限值)
3. n.d. = Not Detected (未檢出)；小於MDL / Less than MDL
4. "-" = Not Regulated (無規格值)
5. 樣品的測試是基於申請人要求混合測試，報告中的混合測試結果不代表其中個別單一材質的含量。
   The sample(s) was/were analyzed on behalf of the applicant as mixing sample in one testing. The above result(s) was/were only given as the informality value.

This document is issued by the Company subject to its General Conditions of Service printed overleaf, available on request or accessible at https://www.sgs.com.tw/terms-of-service and, for electronic format documents, subject to Terms and Conditions for Electronic Documents at https://www.sgs.com.tw/terms-of-service. Attention is drawn to the limitation of liability, indemnification and jurisdiction issues defined therein. Any holder of this document is advised that information contained hereon reflects the Company's findings at the time of its intervention only and within the limits of client's instruction, if any. The Company's sole responsibility is to its Client and this document does not exonerate parties to a transaction from exercising all their rights and obligations under the transaction documents. This document cannot be reproduced, except in full, without prior written approval of the Company. Any unauthorized alteration, forgery or falsification of the content or appearance of this document is unlawful and offenders may be prosecuted to the fullest extent of the law. Unless otherwise stated the results shown in this test report refer only to the sample(s) tested.

友桂電子股份有限公司 (YOKETAN CORPORATION)
台中市潭子區南二路28號之2 (NO. 28-2, SOUTH 2ND RD., TANZI DISTRICT, TAICHUNG CITY, TAIWAN, R.O.C.)

重金屬流程圖 / Analytical flow chart of heavy metal

根據以下的流程圖之條件，樣品已完全溶解。（六價鉻測試方法除外）
These samples were dissolved totally by pre-conditioning method according to below flow chart.
（Cr^{6+} test method excluded）

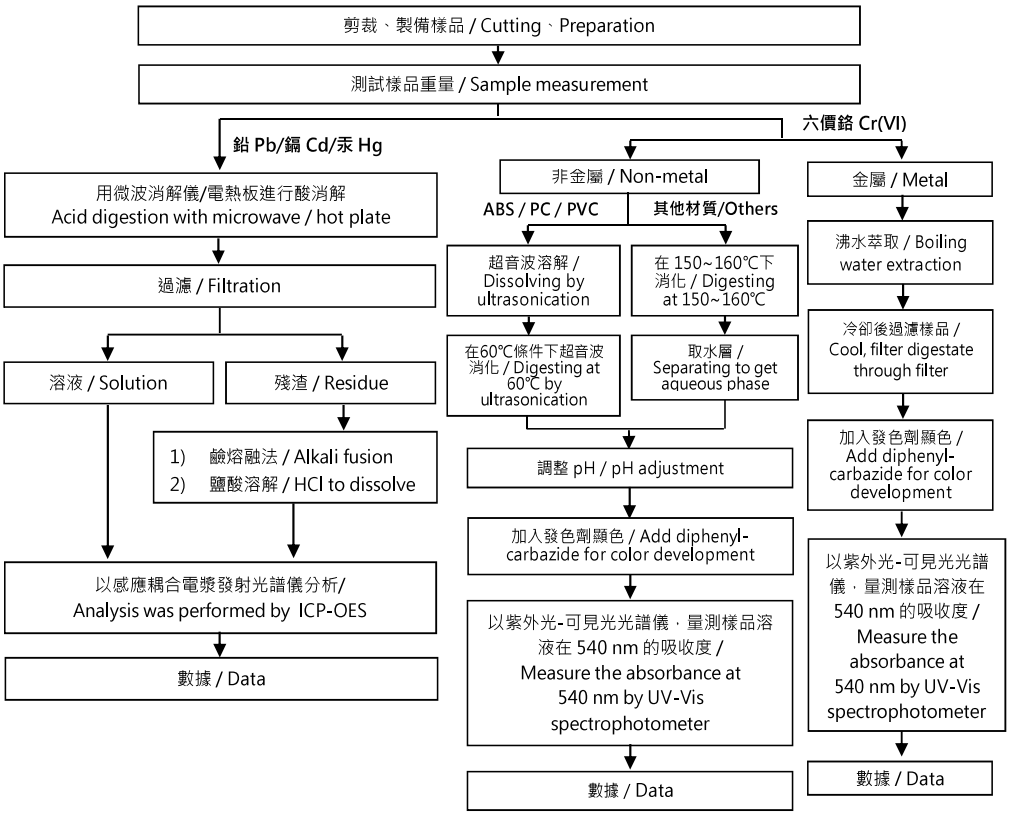

This document is issued by the Company subject to its General Conditions of Service printed overleaf, available on request or accessible at https://www.sgs.com.tw/terms-of-service and, for electronic format documents, subject to Terms and Conditions for Electronic Documents at https://www.sgs.com.tw/terms-of-service. Attention is drawn to the limitation of liability, indemnification and jurisdiction issues defined therein. Any holder of this document is advised that information contained hereon reflects the Company's findings at the time of its intervention only and within the limits of client's instruction, if any. The Company's sole responsibility is to its Client and this document does not exonerate parties to a transaction from exercising all their rights and obligations under the transaction documents. This document cannot be reproduced, except in full, without prior written approval of the Company. Any unauthorized alteration, forgery or falsification of the content or appearance of this document is unlawful and offenders may be prosecuted to the fullest extent of the law. Unless otherwise stated the results shown in this test report refer only to the sample(s) tested.

友桂電子股份有限公司 (YOKETAN CORPORATION)
台中市潭子區南二路28號之2 (NO. 28-2, SOUTH 2ND RD., TANZI DISTRICT, TAICHUNG CITY, TAIWAN, R.O.C.)

多溴聯苯/多溴聯苯醚分析流程圖 / Analytical flow chart - PBBs/PBDEs

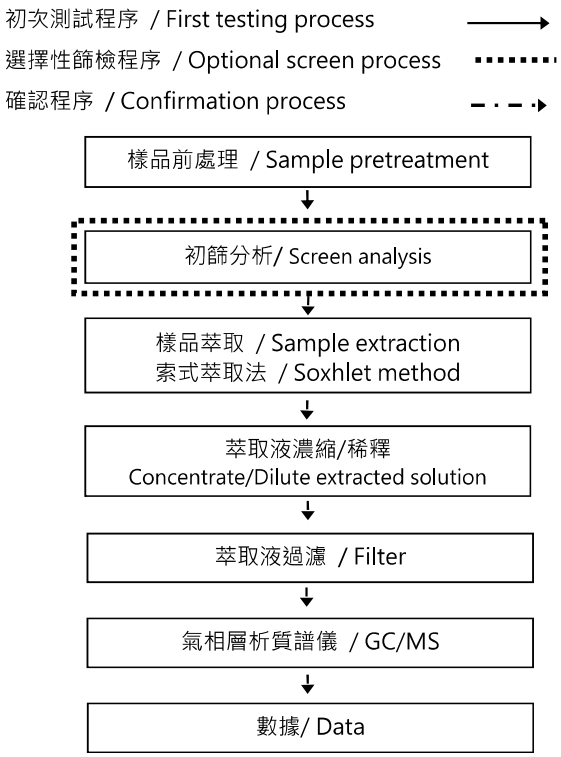

This document is issued by the Company subject to its General Conditions of Service printed overleaf, available on request or accessible at https://www.sgs.com.tw/terms-of-service and, for electronic format documents, subject to Terms and Conditions for Electronic Documents at https://www.sgs.com.tw/terms-of-service. Attention is drawn to the limitation of liability, indemnification and jurisdiction issues defined therein. Any holder of this document is advised that information contained hereon reflects the Company's findings at the time of its intervention only and within the limits of client's instruction, if any. The Company's sole responsibility is to its Client and this document does not exonerate parties to a transaction from exercising all their rights and obligations under the transaction documents. This document cannot be reproduced, except in full, without prior written approval of the Company. Any unauthorized alteration, forgery or falsification of the content or appearance of this document is unlawful and offenders may be prosecuted to the fullest extent of the law. Unless otherwise stated the results shown in this test report refer only to the sample(s) tested.

友桂電子股份有限公司 (YOKETAN CORPORATION)
台中市潭子區南二路28號之2 (NO. 28-2, SOUTH 2ND RD., TANZI DISTRICT, TAICHUNG CITY, TAIWAN, R.O.C.)

可塑劑分析流程圖 / Analytical flow chart - Phthalate

【測試方法/Test method: IEC 62321-8】

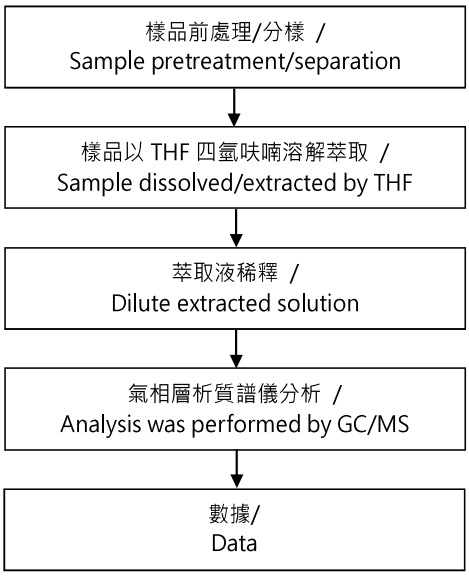

This document is issued by the Company subject to its General Conditions of Service printed overleaf, available on request or accessible at https://www.sgs.com.tw/terms-of-service and, for electronic format documents, subject to Terms and Conditions for Electronic Documents at https://www.sgs.com.tw/terms-of-service. Attention is drawn to the limitation of liability, indemnification and jurisdiction issues defined therein. Any holder of this document is advised that information contained hereon reflects the Company's findings at the time of its intervention only and within the limits of client's instruction, if any. The Company's sole responsibility is to its Client and this document does not exonerate parties to a transaction from exercising all their rights and obligations under the transaction documents. This document cannot be reproduced, except in full, without prior written approval of the Company. Any unauthorized alteration, forgery or falsification of the content or appearance of this document is unlawful and offenders may be prosecuted to the fullest extent of the law. Unless otherwise stated the results shown in this test report refer only to the sample(s) tested.

友桂電子股份有限公司 (YOKETAN CORPORATION)
台中市潭子區南二路28號之2 (NO. 28-2, SOUTH 2ND RD., TANZI DISTRICT, TAICHUNG CITY, TAIWAN, R.O.C.)

鹵素分析流程圖 / Analytical flow chart - Halogen

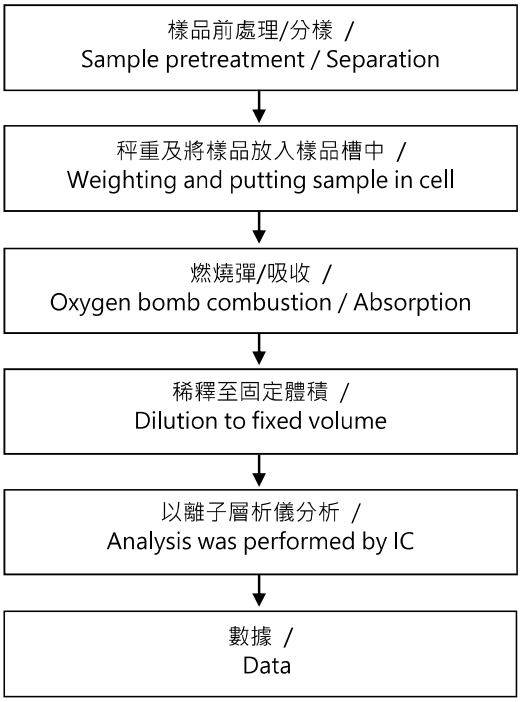

This document is issued by the Company subject to its General Conditions of Service printed overleaf, available on request or accessible at https://www.sgs.com.tw/terms-of-service and, for electronic format documents, subject to Terms and Conditions for Electronic Documents at https://www.sgs.com.tw/terms-of-service. Attention is drawn to the limitation of liability, indemnification and jurisdiction issues defined therein. Any holder of this document is advised that information contained hereon reflects the Company's findings at the time of its intervention only and within the limits of client's instruction, if any. The Company's sole responsibility is to its Client and this document does not exonerate parties to a transaction from exercising all their rights and obligations under the transaction documents. This document cannot be reproduced, except in full, without prior written approval of the Company. Any unauthorized alteration, forgery or falsification of the content or appearance of this document is unlawful and offenders may be prosecuted to the fullest extent of the law. Unless otherwise stated the results shown in this test report refer only to the sample(s) tested.

友桂電子股份有限公司 (YOKETAN CORPORATION)
台中市潭子區南二路28號之2 (NO. 28-2, SOUTH 2ND RD., TANZI DISTRICT, TAICHUNG CITY, TAIWAN, R.O.C.)

*** 照片中如有箭頭標示，則表示為實際檢測之樣品/部位. ***
(The tested sample / part is marked by an arrow if it's shown on the photo.)

ETR24C01798

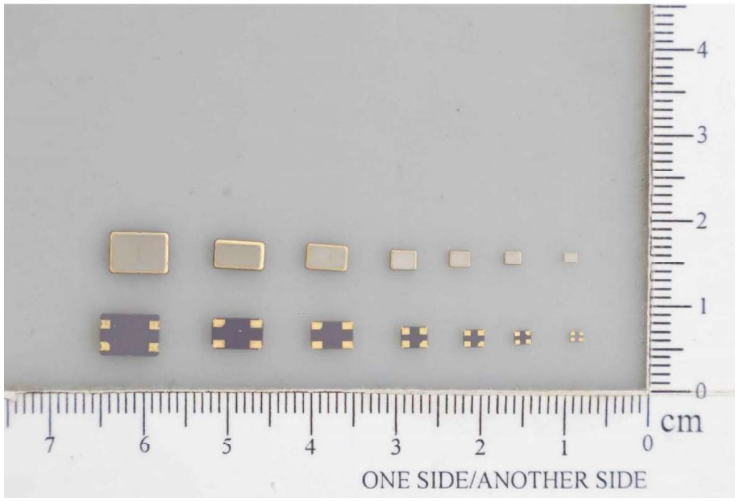

** 報告結尾 (End of Report) **

This document is issued by the Company subject to its General Conditions of Service printed overleaf, available on request or accessible at https://www.sgs.com.tw/terms-of-service and, for electronic format documents, subject to Terms and Conditions for Electronic Documents at https://www.sgs.com.tw/terms-of-service. Attention is drawn to the limitation of liability, indemnification and jurisdiction issues defined therein. Any holder of this document is advised that information contained hereon reflects the Company's findings at the time of its intervention only and within the limits of client's instruction, if any. The Company's sole responsibility is to its Client and this document does not exonerate parties to a transaction from exercising all their rights and obligations under the transaction documents. This document cannot be reproduced, except in full, without prior written approval of the Company. Any unauthorized alteration, forgery or falsification of the content or appearance of this document is unlawful and offenders may be prosecuted to the fullest extent of the law. Unless otherwise stated the results shown in this test report refer only to the sample(s) tested.