Doc. Number:

□ Tentative Specification

□Preliminary Specification

■Approval Specification

MODEL NO: MC190GFL01,TDM

PN: AM1900000071 2AAD576083T(T0173)

Date: 2025/3/11

Version: 1.8

Customer: DIVA

APPROVED BY **SIGNATURE**



Name / Title

Note

Please return 1 copy for your confirmation with your signature and comments.

Approved By	Checked By	Prepared By
Steve.Lin	Hy.Chen	Ashley

 The copyright belongs to GIS. Any unauthorized use is prohibited

Record of Revision

Version	Revise Date	Page	Content
1.0	2020/12/25	All	Initial release
1.1	2021/4/29	1	Update OCR specification
1.2	2021/6/17	23	Update TDM drawing ,Rev V3.1
1.3	2021/10/5	23	PN change from AM1900000011 to AM1900000021 Update TDM drawing ,Rev V3.2
1.4	2021/12/13	3	Add TDM SN label picture
1.5	2022/01/10	23	PN change from AM1900000021 to AM1900000031 Update TDM drawing ,Rev V3.3
1.6	2022/06/10	6 12	LED characteristics, Backlight input signal characteristics Optical Specifications
1.6.1	2022/09/26	-	Using Wacker Structure glue N9111 instead of Wacker glue 245Gel flex
1.7	2022/9/7	23	PN change from AM1900000031 to AM1900000041 Update TDM drawing ,Rev V4 (Dispense dam glue N9111 twice)
1.7.1	2022/11/29	-	PN change from AM1900000031 to AM1900000051 (With touch IC 80W84/Dispense dam glue N9111 once)
1.7.2	2022/11/29	-	PN change from AM1900000041 to AM1900000061 (With touch IC81W84/Dispense dam glue N9111 once)
1.7.3	2023/5/5	21 & 23	Update shipping label and TDM drawing Rev V4.1
1.8	2025/3/11	23	PN change from AM1900000061 to AM1900000071 Update TDM drawing ,Rev 5

 The copyright belongs to GIS. Any unauthorized use is prohibited

Contents

1. General Specifications 1
1.1. Touch Display Module General Parameters 1
1.2. OCR General Specifications 1
1.3 LCD Module Gereral Specifications 2
2. Mechanical Specifications 2
2.1. Stack-up tructure 2
2.2. Product Label Definition 3
3. TFT LCD Module Electrical Characteristics 4
3.1. Absolute Maximum Ratings 4
3.2. Power Specification 4
3.3. LVDS DC Signal Electrical Characteristics 4
3.4. TFT LCD Module Backlight Unit 6
3.5. TFT LCD module Pin Assignment 7
3.6. TFT LCD module Input Data format 9
3.7. TFT LCD module Interface Timing 9
3.8. TFT LCD module Power ON/OFF Sequence 10
4. Optical Specifications 12
5. Touch Panel Specifications 15
5.1. General parameters of touch panel 15
5.2. Supply voltage and Power Consumption 15
5.3. Connector Pin Assignment 15
5.4. OS Support Matrixt 16
5.5. TP Controller block diagram 17
6. Reliability test specification 18
7. Safety and Attention 20
8. Packaging 21
8.1. Packaging Information 21
8.2. Shipping using pallet 22
9. Drawing 23
9.1. TDM drawing 23

 The copyright belongs to GIS. Any unauthorized use is prohibited

1. General Specifications

1.1. Touch Display Module General Parameters

General	
Touch Module Type	Projected Capacitive Type
Touch Cover Material	Glass
Touch Cover Color	Black
Touch Display Module Outline	426.7mm x 362.7mm (w/o FPC)
Touch Active Area (Width x Height)	381.32mm x 306.06mm
Touch Window Visible Area	378.32mm x 303.06mm
Touch Window Surface Treatment	Etching AG
Chemical Strength	Cs>450Mpa,DOL>8um
AG Gloss	80+/-10
Haze	3%~8%
Reflection	<10%
Weight (g)	2.5kg
TDM Operate Temp.	0 ~ 50 °C
TDM Storage Temp.	-20 ~ 60 °C
Electrical	
IC solution (Model name)	EETI EXC81W84
Supply Voltage	5V
Interface	USB

1.2. OCR General Specifications

Property	Test method	Unit	Value
Color			Transparent
Density at 23℃	ISO 2781	g/ cm^3	0.97
Penetration degree @150g cone	DIN ISO 2137	Mm/10	300
Dielectric constant	VDE 0303 T4/50 Hz	[εr]	2.7
Refractive index	nD25		1.4
Volume resistance	IEC93	[Ω cm]	10^{15}

Form No.：AI2RD-0003-17(V1) The copyright belongs to GIS. Any unauthorized use is prohibited.

The copyright belongs to GIS. Any unauthorized use is prohibited.

Dielectric loss	IEC93	[Ω]	10×10^{-4}
Dielectric strength	IEC243	[KV/mm]	24

1.3. LCD Module General Specifications

General			
Items	Specification	Unit	Note
Active Screen Size	19	inch	
Panel Type	AHVA		
Display Area (AA)	376.32 (H) x 301.06 (V)	mm	
Outline Dimension	396 (H) x 324 (V) x 15.3 (D) (Typ)	mm	
Display Colors	16.7M	Colors	
Number of Pixels	1280(x3) x 1024	Pixel	
Pixel Pitch	0.294 (H) x 0.294 (V)	mm	
Interface	LVDS		
Operating Temperature	0 ~ 50	°C	
Storage Temperature	-20 ~ 60	°C	
Display Mode	Normally Black		

2. Mechanical Specifications

2.1. Stack-up structure

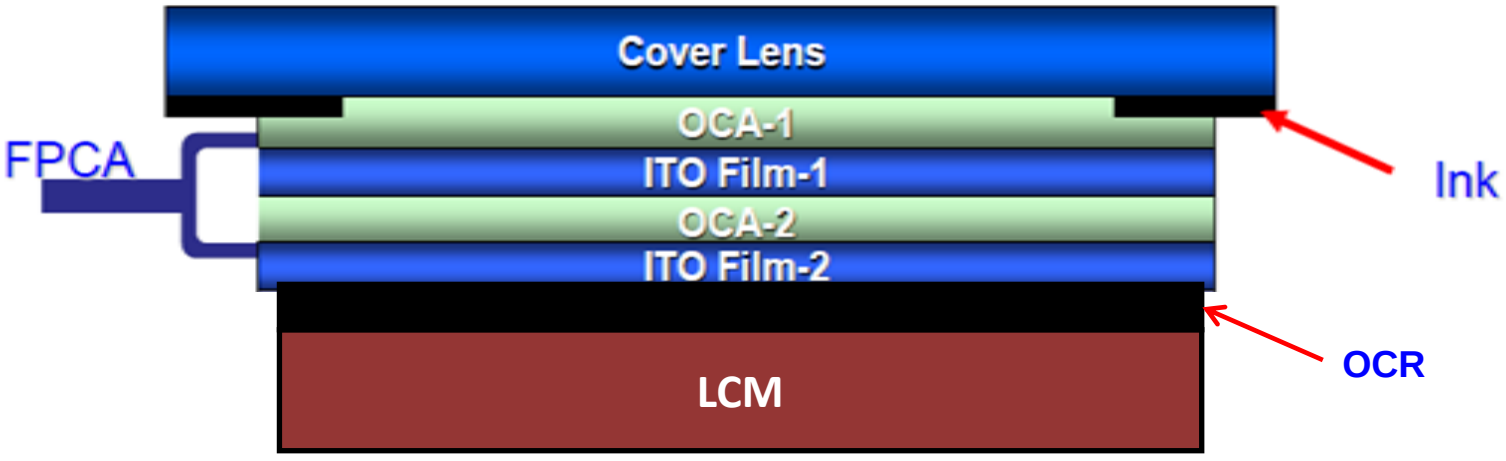

 The copyright belongs to GIS. Any unauthorized use is prohibited.

The copyright belongs to GIS. Any unauthorized use is prohibited.

Item	Part Name	Thickness (mm)	Note
1	Cover Lens	1.8	Soda Lime Glass Etching CG/Gloss 80
2	OCA -1	0.1	
3	ITO Film-1	0.125	ITO Film
4	OCA -2	0.05	
5	ITO Film-2	0.125	ITO Film
6	OCR	0.8	Above bezel
7	LCM	15.29	
Total		18.29	

2.2. Product Label Definition

TPM S/N label, product ID and bar-code stick on FPC.
TDM S/N label, product ID and bar-code stick on LCM back side bar-code + S/N label+ product ID code size is 30x15x0.05mm.

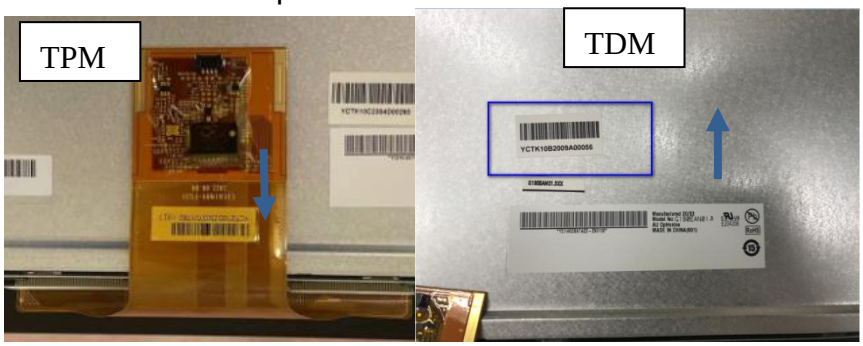

Example：YCT E2 0B 19129 00001

Character	Definition	Comment	Remark
1~3	Component Code	YCT	
4	Config code	Z: TPM K: TDM	
5	Plant code	1. E4 2.H3	
6~7	Phase code	0A: Proto 0B. EVT 0C: DVT 0D: MP	

Form No.：AI2RD-0003-17(V1) The copyright belongs to GIS. Any unauthorized use is prohibited.

The copyright belongs to GIS. Any unauthorized use is prohibited.

8~9	Year	2019:19 2020:20 …etc	
10~11	Month	Month：01,02,…,10,11,12	Generated by system
12	Day	Day:1,2,3,…9,A,…V,W,X (except I&O)	Generated by system
13~17	Serial number	5 digit (00001~99999)	Generated by system

3. TFT LCD Module Electrical Characteristics

3.1. Absolute Maximum Ratings

Item	Symbol	Min	Max	Unit
Logic/LCD driving Voltage	Vin	-0.3	+5.5	V

3.2. Power Specification

Symbol	Parameter	Min	Typ	Max	Unit	Remark
VDD	Logic/LCD driving Voltage	4.5	5.0	5.5	V	
IDD	VDD Current	-	0.67	0.8	A	White pattern (VDD=5V at 60HZ)
Irush	LCD Inrush Current	-	2.7	3.4	A	
PDD	VDD Power	-	3.35	4.0	W	White pattern (VDD=5V at 60HZ)
VDDrp	Allowable Logic/LCD Drive Ripple Voltage	-	-	300	mV (P-P)	With Panel Loading

 The copyright belongs to GIS. Any unauthorized use is prohibited.

The copyright belongs to GIS. Any unauthorized use is prohibited.

3.3. LVDS DC Signal Electrical Characteristics

Symbol	Item	Min	Typ	Max	Unit	Remark
VTH	Differential Input High Threshold	-	-	100	mV	VCM=1.2V
VTL	Differential Input Low Threshold	-100	-	-	mV	VCM=1.2V
VID	Input Differential Voltage	100	400	600	mV	
VICM	Differential Input Common Mode Voltage	1.0	1.2	1.5	V	VTH/VTL=+-100mV

Input signals shall be low or Hi-Z state when VDD is off.

Note: LVDS Signal Waveform.

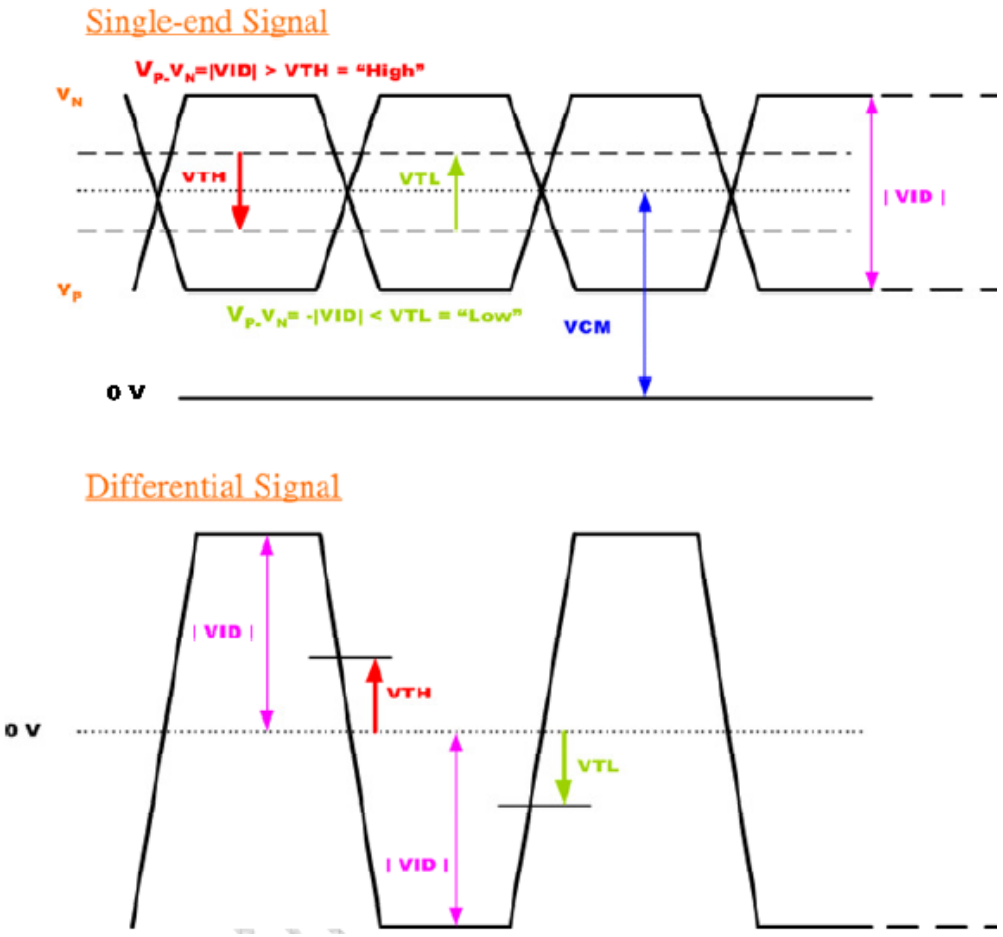

 The copyright belongs to GIS. Any unauthorized use is prohibited.

The copyright belongs to GIS. Any unauthorized use is prohibited.

3.4. TFT LCD Module Backlight Unit

LED Back light driver connector

Manufacturer	STM
Model Number	MS24019RHD
Mating Model Number	P24019

Connector Pin Define

Pin #	Symbol	Pin Description
1	12V	Power 12V
2	12V	Power 12V
3	12V	Power 12V
4	NC	NC
5	GND	Ground
6	GND	Ground
7	GND	Ground
8	EN	Enable(0V:disable, 5V:Enable)
9	Dimming	PWM; duty 10%~ 100%

LED characteristics

Symbol	Parameter	Min	Typ	Max	Unit	Condition
PLED	Backlight Power Consumption		11	11.6	Watt	LED only
LTLED	LED Life Time	50000			Hour	LED only

Note 1: Calculator value for reference PLED = VF (Normal Distribution) * IF (Normal Distribution) / Efficiency

Note 2: The LED life-time define as the estimated time to 50% degradation of initial luminous.

Backlight input signal characteristics

 The copyright belongs to GIS. Any unauthorized use is prohibited.

The copyright belongs to GIS. Any unauthorized use is prohibited.

Symbol	Parameter	Min	Typ	Max	Unit	Remark
VLED	LED Power Supply	10.8	12	13.2	V	Define as Connector Interface (Ta=25℃)
VLED_EN	LED Enable Input High Level	2.5	-	5.5	V	
	LED Enable Input Low Level	-	-	0.7	V	
VPWM_EN	PWM Logic Input High Level	2.5	-	5.5	V	
	PWM Logic Input Low Level	-	-	0.7	V	
FPWM	PWM Input Frequency	200	-	20K	HZ	
Duty	Dimming Duty 200HZ~5kHZ	5	-	100	%	
	Dimming Duty 5kHZ~20kHZ	15		100	%	

3.5. TFT LCD module Pin Assignment

LVDS Connector

Manufacturer	JAE/STM
Model Number	FI-XB30SSLA-HF15 / MSBKT2407P30HB
Adaptable Plug	FI-X30HL (Locked Type) / FI-X30H (Unlocked Type)

Pin#	Signal Name	Pin#	Signal Name
1	RxOIN0-	2	RxOIN0+
3	RxOIN1-	4	RxOIN1+
5	RxOIN2-	6	RxOIN2+
7	VSS	8	RxOCLKIN-
9	RxOCLKIN+	10	RxOIN3-
11	RxOIN3+	12	RxEIN0-
13	RxEIN0+	14	VSS
15	RxEIN1-	16	RxEIN1+
17	VSS	18	RxEIN2-
19	RxEIN2+	20	RxECLKIN-

Form No.：AI2RD-0003-17(V1) The copyright belongs to GIS. Any unauthorized use is prohibited.

The copyright belongs to GIS. Any unauthorized use is prohibited.

21	RxECLKIN+	22	RxEIN3-
23	RxEIN3+	24	VSS
25	VSS	26	NC
27	VSS	28	VCC
29	VCC	30	VCC

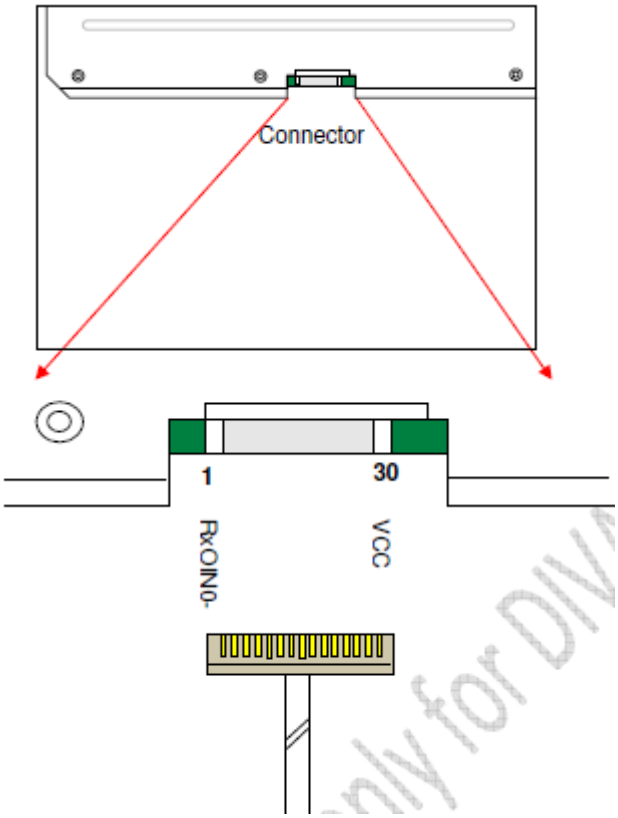

Note1: Start from left side

Note2: Input signals of odd and even clock shall be the same timing.

Note3: Please follow VESA.

 The copyright belongs to GIS. Any unauthorized use is prohibited.

The copyright belongs to GIS. Any unauthorized use is prohibited.

3.6. TFT LCD module Input Data format

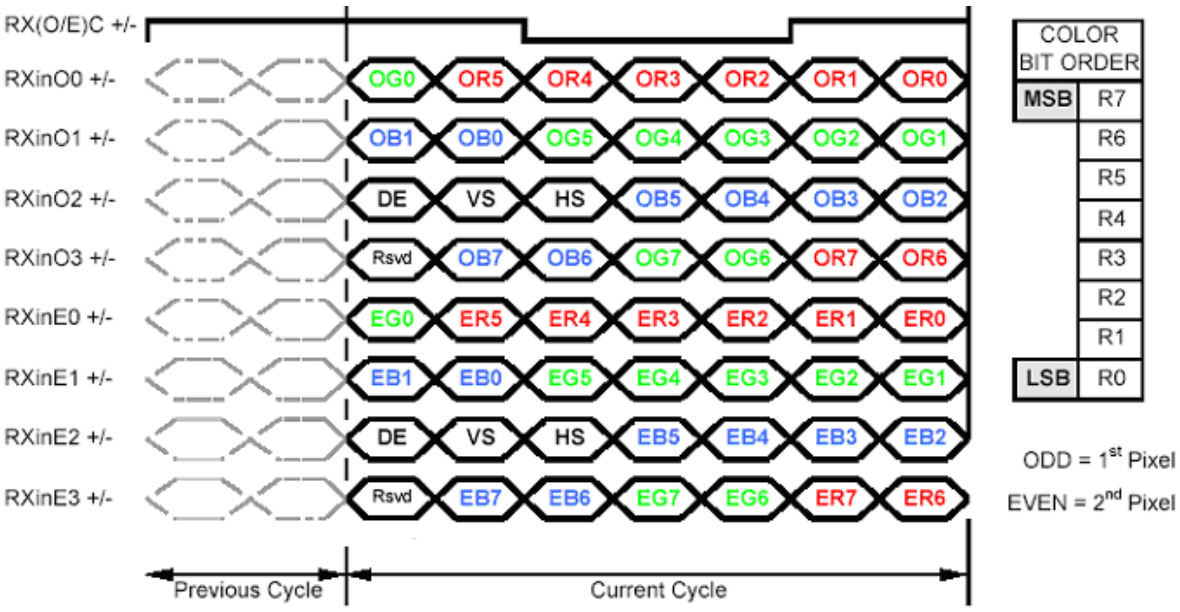

Note1: Normally DE mode only. VS and HS on EVEN channel are not used.

Note2: Please follow VESA.

Note3: 8-bit in

3.7. TFT LCD module Interface Timing

Signal		Symbol	Min.	Typ.	Max.	Unit
Clock Frequency		1/ T_{Clock}	45	54	67.5	MHz
Vertical Section	Period	T_V	1032	1066	1150	T_{Line}
	Active	T_{VD}	1024	1024	1024	
	Blanking	T_{VB}	8	42	126	
Horizontal Section	Period	T_H	780	844	2047	T_{Clock}
	Active	T_{HD}	640	640	640	
	Blanking	T_{HB}	140	204	-	
Frame Rate		F	50	60	75	Hz

Form No.：AI2RD-0003-17(V1) The copyright belongs to GIS. Any unauthorized use is prohibited.

The copyright belongs to GIS. Any unauthorized use is prohibited.

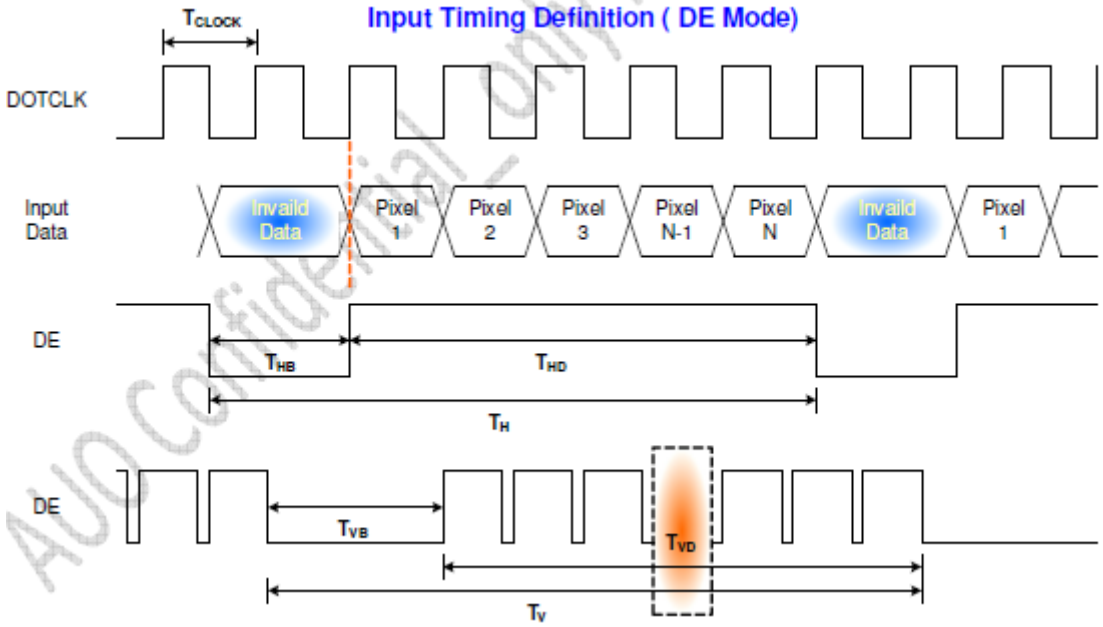

3.8. TFT LCD module Power ON/OFF Sequence

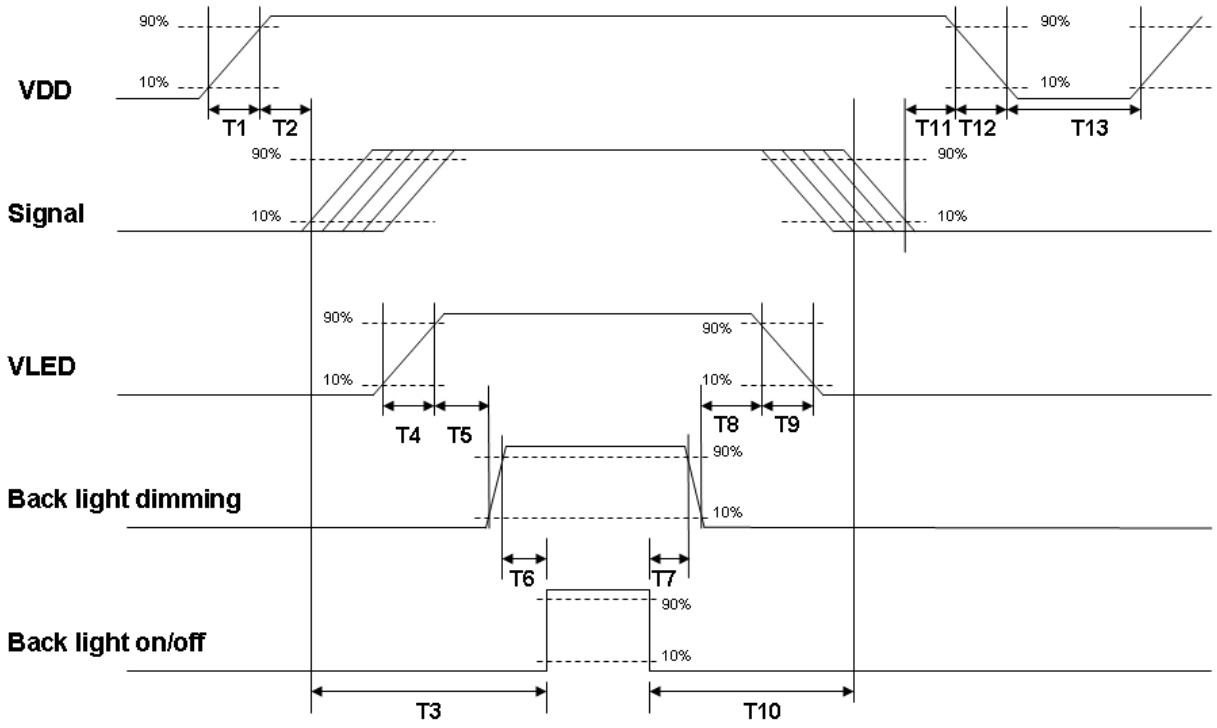

Form No.：AI2RD-0003-17(V1) The copyright belongs to GIS. Any unauthorized use is prohibited.

The copyright belongs to GIS. Any unauthorized use is prohibited.

Parameter	Value			Units
	Min.	Typ.	Max.	
T1	0.5	-	10	[ms]
T2	30	40	50	[ms]
T3	200	-	--	[ms]
T4	0.5	-	10	[ms]
T5	10	-	-	[ms]
T6	10	-	-	[ms]
T7	0	-	-	[ms]
T8	10	-	-	[ms]
T9	-	-	10	[ms]
T10	110	-	-	[ms]
T11	0	16	50	[ms]
T12	0		10	[ms]
T13	1000	-	-	[ms]

Confidential

 The copyright belongs to GIS. Any unauthorized use is prohibited.

The copyright belongs to GIS. Any unauthorized use is prohibited.

4. Optical Specifications

The optical characteristics are measured under stable conditions at 25 ₀C (Room Temperature):

Item	Unit	Condition	Min	Typ.	Max.	Note
White Luminance	cd/m2	ILED= 50mA(center point)	220	280	-	1
Uniformity	%	9 points	80	-	-	2,3
Contrast Ratio	-		700	1000	-	4
Response Time	msec	Rising	-	13	18	5
		Falling	-	12	17	
		Rising+Falling	-	25	35	
Viewing Angle	degree	Right	85	89	-	6
		Left	85	89	-	
		Upper	85	89	-	
		Lower	85	89	-	
Color/ Chromaticity Coordinates (CIE 1931)	-	Red x	0.601	0.651	0.701	
		Red y	0.293	0.343	0.393	
		Green x	0.252	0.302	0.352	
		Green y	0.561	0.611	0.661	
		Blue x	0.105	0.155	0.205	
		Blue y	0.025	0.075	0.125	
		White x	0.263	0.313	0.363	
		White y	0.279	0.329	0.379	
Color Gamut	%		-	72%	-	

Note 1: Measurement method

Equipment Pattern Generator, Power Supply, Digital Voltmeter, Luminance meter (SR_3 or equivalent)

Aperture 1° with 50cm viewing distance

Test Point: Center

Environment: < *1 lux*

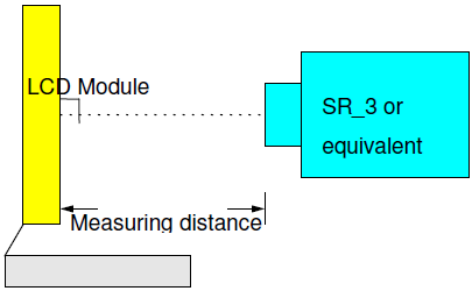

 The copyright belongs to GIS. Any unauthorized use is prohibited.

The copyright belongs to GIS. Any unauthorized use is prohibited.

Note 2: Definition of 9 points position

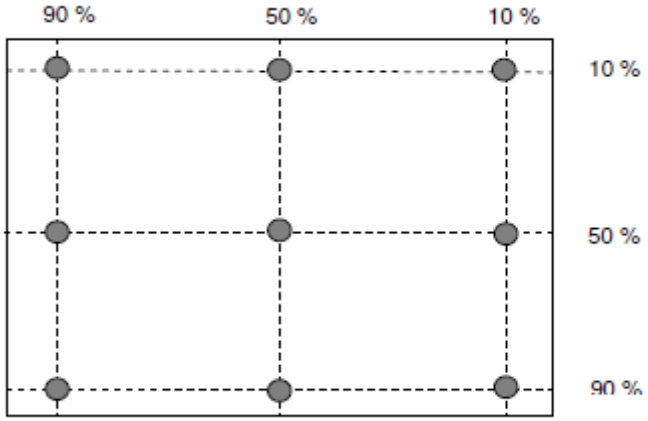

Note 3: The luminance uniformity of 9 points is defined by dividing the minimum luminance values by the maximum test point luminance

$$\delta_{W9} = \frac{\text{Minimum Brightness of nine points}}{\text{Maximum Brightness of nine points}}$$

Note 4: Definition of contrast ratio (CR):

$$\text{Contrast ratio (CR)} = \frac{\text{Brightness on the “White” state}}{\text{Brightness on the “Black” state}}$$

Note 5: Definition of response time:

The output signals of photo detector are measured when the input signals are changed from “White” to “Black” (falling time) and from “Black” to “White” (rising time), respectively. The response time interval is between 10% and 90% of amplitudes. Please refer to the figure as below.

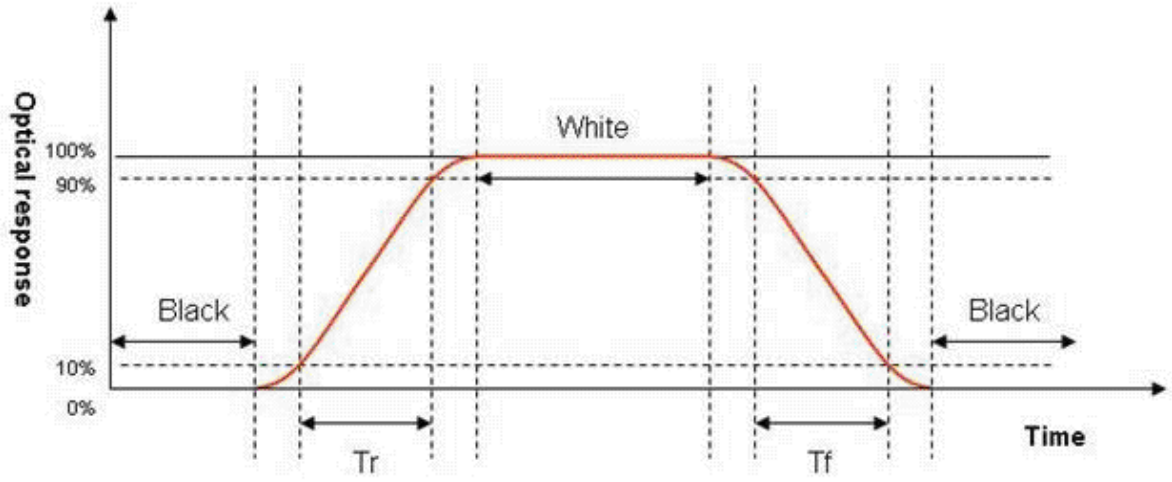

 The copyright belongs to GIS. Any unauthorized use is prohibited.

The copyright belongs to GIS. Any unauthorized use is prohibited.

Note 6: Definition of viewing angle

Viewing angle is the measurement of contrast ratio ≧10, at the screen center, over a 180° horizontal and ≧ 180° vertical range (off-normal viewing angles). The 180° viewing angle range is broken down as below: 90° (θ) horizontal left and right, and 90° (Φ) vertical high (up) and low (down). The measurement direction is typically perpendicular to the display surface with the screen rotated to its center to develop the desired measurement viewing angle.

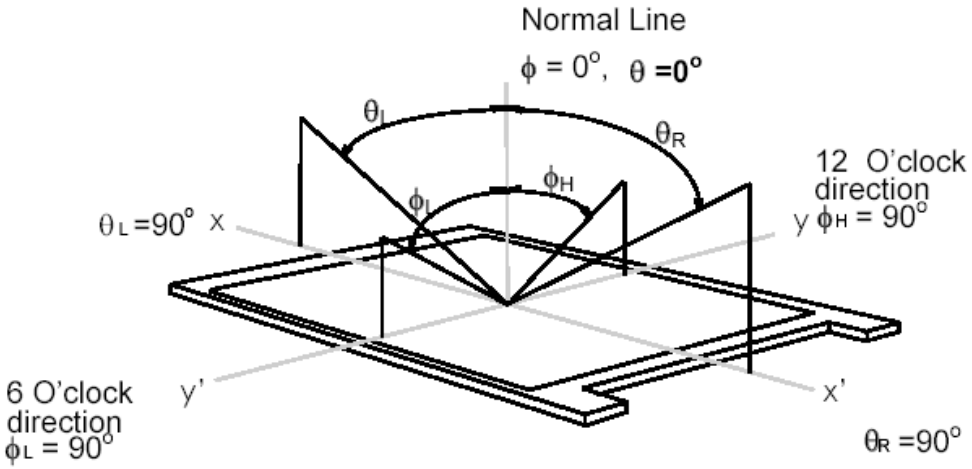

 The copyright belongs to GIS. Any unauthorized use is prohibited.

The copyright belongs to GIS. Any unauthorized use is prohibited.

5. Touch Panel Specifications

5.1. General parameters of touch panel

No	Item	Spec.	Remark
1	Structure type	GFF	
2	Sensing method	Capacitance	
3	Multi-touch support	10 points	
4	Control IC	EETI EXC81W84	
5	Channel numbers	TX: 40 ch, Rx: 50 ch	
6	Sensor Pitch	7.65mm x 7.65mm	
7	Interface	USB 2.0 compliant full speed with LPM L1 supported.	
8	Linearity	<+/- 1.5 mm	All area
9	Accuracy	<+/- 1.5 mm	All area
10	Jitter	<+/- 1.5 mm	All area
11	Report rate	>100 Hz	

5.2. Supply voltage and Power Consumption

Item	Symbol	Min	Typ	Max	Unit	Remark
Supply voltage	VDD	4.5	5.0	5.5	V	
Power Supply Current (Active mode)	IDD		84		mA	Base on FW tuning

5.3. Connector Pin Assignment

Connector Type: Molex 505567-0471

Pin#	Signal Name
1	5V0_SYS
2	USB_TS_D-
3	USB_TS_D+
4	GND

 The copyright belongs to GIS. Any unauthorized use is prohibited.

The copyright belongs to GIS. Any unauthorized use is prohibited.

Touch Panel FPC (top view)

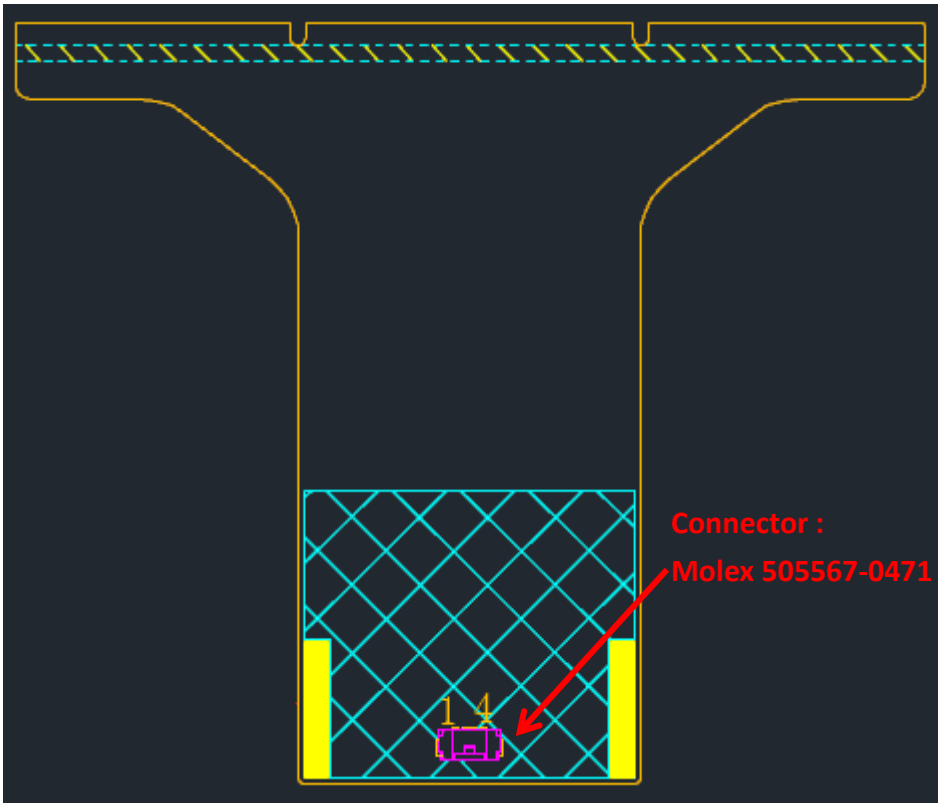

5.4. OS Support Matrix

OS	Version	Interfaces
Windows	Windows 10 IOT (#1) / Windows 10 / Windows 8 / Windows 7 Windows Vista / Windows 2000 / Windows XP (#1: Windows 10 IOT: support it with inbox driver only) (#2: I2C interface: need additional system configuration)	USB / RS232 I2C (#2)
Win CE	Win Embedded Compact 2013 / Win Embedded Compact 7 WinCE 6 / WinCE.Net	USB / RS232
Linux	CentOS, Debian, Fedora, Gentoo, Mandrake (Mandriva), Meego, Red Hat, Slackware, SuSE (OpenSuSE), Ubuntu (Xubuntu) and Yellow Dog etc. *Support most 32/64 bit Linux distribution versions,* *including Kernel 2.6.x / 3.x.x / 4.x.x*	USB / RS232 I2C
Android	Android 2.3 to latest version	USB / I2C
Mac	OSX 10.7.5 to 10.12	USB
QNX	RTOS V6.3 to V6.6	USB/ I2C

 The copyright belongs to GIS. Any unauthorized use is prohibited.

The copyright belongs to GIS. Any unauthorized use is prohibited.

5.5. TP Controller block diagram

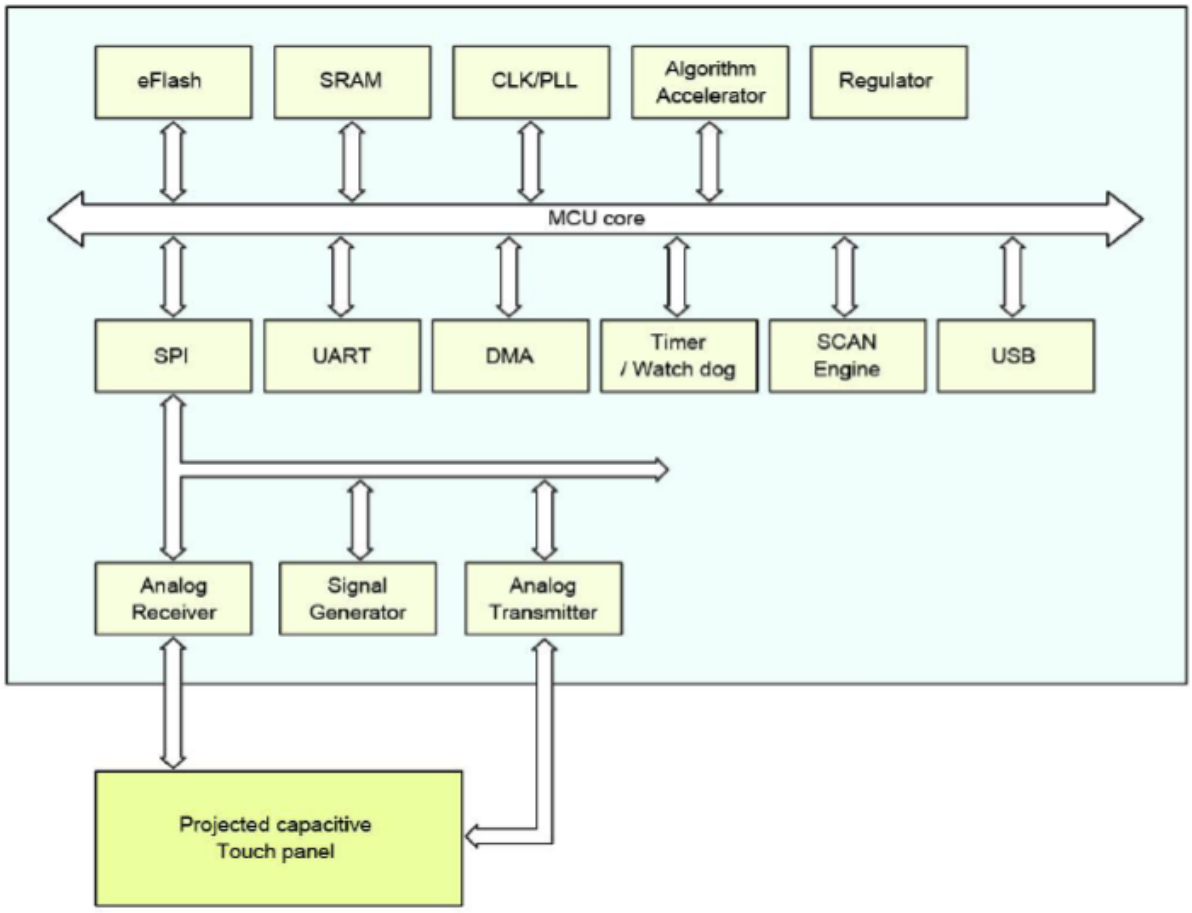

 The copyright belongs to GIS. Any unauthorized use is prohibited.

The copyright belongs to GIS. Any unauthorized use is prohibited.

5.6.

6. Reliability test specification

Item	Conditions	Acceptance
High Temperature Storage	Ta = 60℃ 240h	- No permanent cosmetic damage after test - No functional failure after test
Low Temperature Storage	Ta = -20℃ 240h	- No permanent cosmetic damage after test - No functional failure after test
High Temperature Operation	Ts = 50℃ 240h	- No permanent cosmetic damage after test - No functional failure after test
Low Temperature Operation	Ta = -0℃ 240h	- No permanent cosmetic damage after test - No functional failure after test
High Temperature and Humidity (Power off)	60℃, 90%RH 240h	- No permanent cosmetic damage after test - No functional failure after test
Temperature Cycle	-25℃(30 mins)←→+70℃(30 mins) 50cycle	- No permanent cosmetic damage after test - No functional failure after test
Electro Static Discharge	Contact Mode electric discharge ± 8kV Air Mode electric discharge ±15kV Conditions: 150pF, 330ohm	- No permanent cosmetic damage after test - No functional failure after test

Form No.：AI2RD-0003-17(V1) The copyright belongs to GIS. Any unauthorized use is prohibited.

The copyright belongs to GIS. Any unauthorized use is prohibited.

<table>
<tr>
<td>Vibration Test _ packaging box</td>
<td>The package is tested in four positions. See picture 1 and tabel 1 as bellow.
1. The first phase is the Face number 3 downward and it lasts 30 minutes;
2. Three other phases (Face 1,Face 2 or Face 5 or 6 downwards) last 10 minutes.
Picture 1
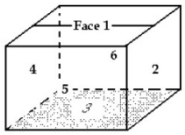

Table 1
<table>
<tr><th>Break point</th><th>Frequency (Hz)</th><th>Amplitude (g²/Hz)</th><th>Slope (dB/Oct)</th></tr>
<tr><td>1</td><td>5.0</td><td>0.01</td><td>0.0</td></tr>
<tr><td>2</td><td>100.0</td><td>0.01</td><td>-0.126xE+02</td></tr>
<tr><td>3</td><td>300.0</td><td>0.0001</td><td></td></tr>
</table>
</td>
<td>- No permanent cosmetic damage after test
- No functional failure after test</td>
</tr>
<tr>
<td>Drop Test _ packaging box</td>
<td>Drop test must be done 6 times at concrete floor. 1 corner, 3 edges, 6 sides.
Height Settings :
1. Box weight 0.5kg-9.5kg Height 76cm
2. Box weight 9.5kg-18.5kg Height 61cm
3. Box weight 18.5-27.5kg Height 46cm</td>
<td>- No permanent cosmetic damage after test
- No functional failure after test</td>
</tr>
</table>

[Note1]Ta=Ambient Temperature

[Note2]In the Reliability Test, Confirm performance after leaving in room temp.

[Note3]In the standard condition, there shall be no practical problems that may affect the Touch function 24 hours later after reliability test. After the reliability test, we can guarantee The production when the corrosion is causing its malfunction. The corrosion causing No functional defect can not be guaranteed

 The copyright belongs to GIS. Any unauthorized use is prohibited.

The copyright belongs to GIS. Any unauthorized use is prohibited.

7. Safety and Attention

7.1. Prohibit put a heavy shock or stress on Touch Panel.

7.2. Don't lift Touch Panel by FPC (Cable).

7.3. Please use dry clothes or soft clothes with neutral detergent or one with ethanol to clear surface. Forbid wiping the boundary between upper and lower ITO film

7.4. Don't use any organic solvent acid or alkali solution

7.5. Don't pile Touch Panel. Don't put heavy goods on Touch Panel.

7.6. Don't twist or pull the FPC (Cable) of Touch Panel for prevent happen to line cut failure.

7.7. Cover the protective film repeatedly could cause oil stain the panel.

7.8. Panel be attached protective film in long-term storage, the glue on it could stain the panel.

7.9. Please pay attention for the matter as stated below at mounting design of Touch Panel and enclosure.

a. Enclosure support to fix Touch Panel must be out if View area.

b. We recommend the material of support to fix Touch Panel is elastic material.

c. Don't bond top of surface (film) of Touch Panel W/O enclosure.

d. The corner parts have conductivity. Don't touch any metal part after mounting.

7.10. The following are maximum values which, if exceeded, may cause faulty operation or damage to the unit.

Item	Symbol	MIN.	MAX	Unit	Remark
Storage temperature	T_{stg}	-20	60	℃	
Operating temperature	T_{op}	0	50	℃	
Storage humidity	H_{stg}	5	90	%	Below 39℃ wet bulb temperature
Operating humidity	H_{op}	5	90	%	

 The copyright belongs to GIS. Any unauthorized use is prohibited.

The copyright belongs to GIS. Any unauthorized use is prohibited.

8. Packaging

8.1. Packaging Information

Shipping label definitions:

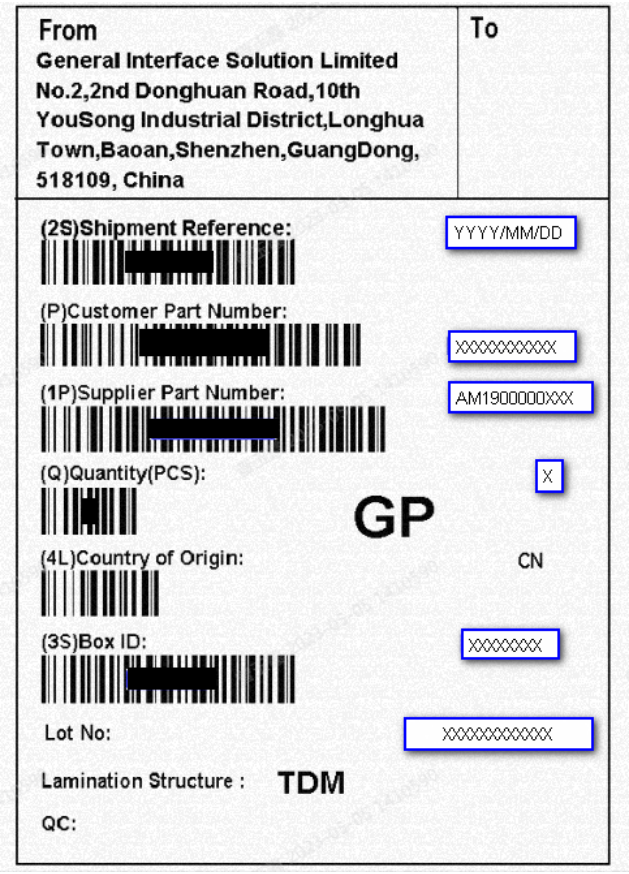

Note :

1. From :
2. (2S)Shipment Reference : YYYY/MM/DD
3. (P)Customer Part Number: XXXXXXXXXXX
4. (1P)Supplier Part Number : AM1900000XXX
5. (Q)Quantity(PCS) : X
6. (4L)Country of Origin : CN
7. (3S)Box ID :XXXXXXXX
8. LOT No: XXXXXXXXXXXX
9. Lamination Structure TDM

 The copyright belongs to GIS. Any unauthorized use is prohibited.

The copyright belongs to GIS. Any unauthorized use is prohibited.

8.2. Shipping using pallet

(1) Pallet dimension: 1200mm*800mm

(2) Packaging Specification and Quantity

NO.	Module/Carton (pcs)	Carton/floor	Carton/ Pallet(pcs)	Module/pallet (pcs)	Remark
Qty.	6	3	12	72	Sea freight (tentative)

Table 26: Packaging Specification and Quantity

(3) PKG BOM List for Pallet

No	Item	Module (Material)	Dimensions(mm)	Quantity	Remark
1	EPE Tray	PET	550*450*1.2	84	
2	EPE cushion	EPE	426*362*2	72	
3	EPE for Inner box cushion	EPE	1590*926*20	12	SET
4	Anti-bag	PE	860*630*0.08	12	
5	Carton	CORRUGATED PAPER	607*507*286	12	
6	Pallet	Wood	1200*800*120	1	

Lily 19: PKG BOM List for Pallet

 The copyright belongs to GIS. Any unauthorized use is prohibited.

The copyright belongs to GIS. Any unauthorized use is prohibited.

9. Drawing

9.1. TDM drawing

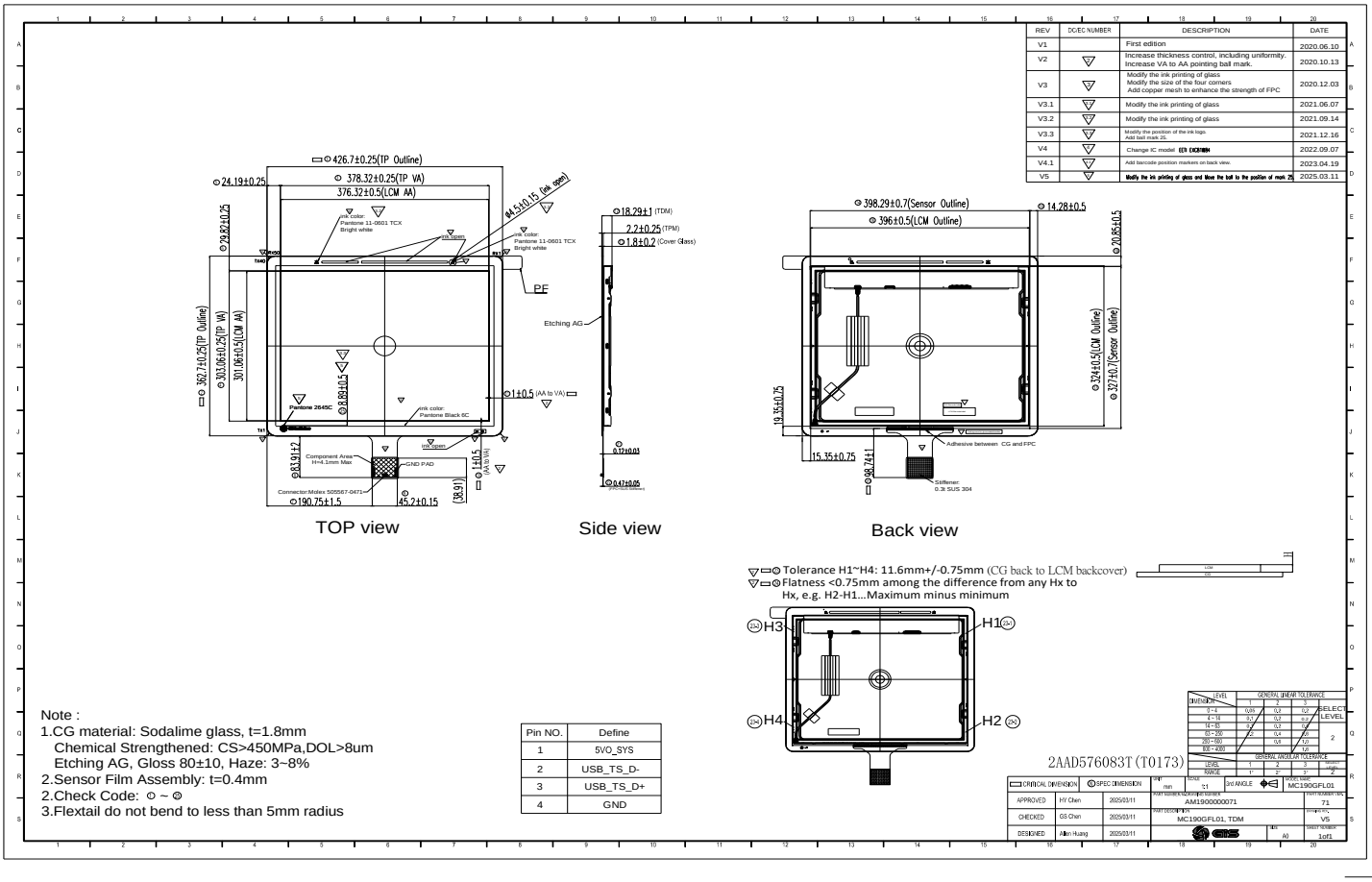

9.2.



The copyright belongs to GIS. Any unauthorized use is prohibited.