APPROVAL SHEET

WF25N, WF20N, WF12N, WF08N, WF06N

±1%, ±5%

Thick Film High Voltage Chip Resistors

UL Safety Certification

Size 2512,2010,1206, 0805, 0603

FEATURE

1. Special materials and design for higher working voltage required.
2. Compatible with flow and reflow soldering.
3. Suitable for lead free soldering.
4. Max. Voltage coefficient resistance below 300ppm.
5. RoHS compliant & Halogen Free.
6. Safety resistor certificate meet：
    - UL/IEC 62368 resistor requirement certificated
    - UL/IEC 60950-1 2.5KV impulse certificated
    - UL/IEC 60065 10KV impulse certificated

APPLICATION

- Power supply
- Measurement instrument
- Back light inverter
- Medical or Military equipment

DESCRIPTION

The resistors are constructed in a high grade ceramic body (aluminum oxide). Internal metal electrodes are added at each end and connected by a resistive paste that is applied to the top surface of the substrate. The composition of the paste is adjusted to give the approximate resistance required and the value is trimmed to nominated value within tolerance which controlled by laser trimming of this resistive layer.

The resistive layer is covered with a protective coat. Finally, the two external end terminations are added. For ease of soldering the outer layer of these end terminations is a Tin (lead free) alloy.

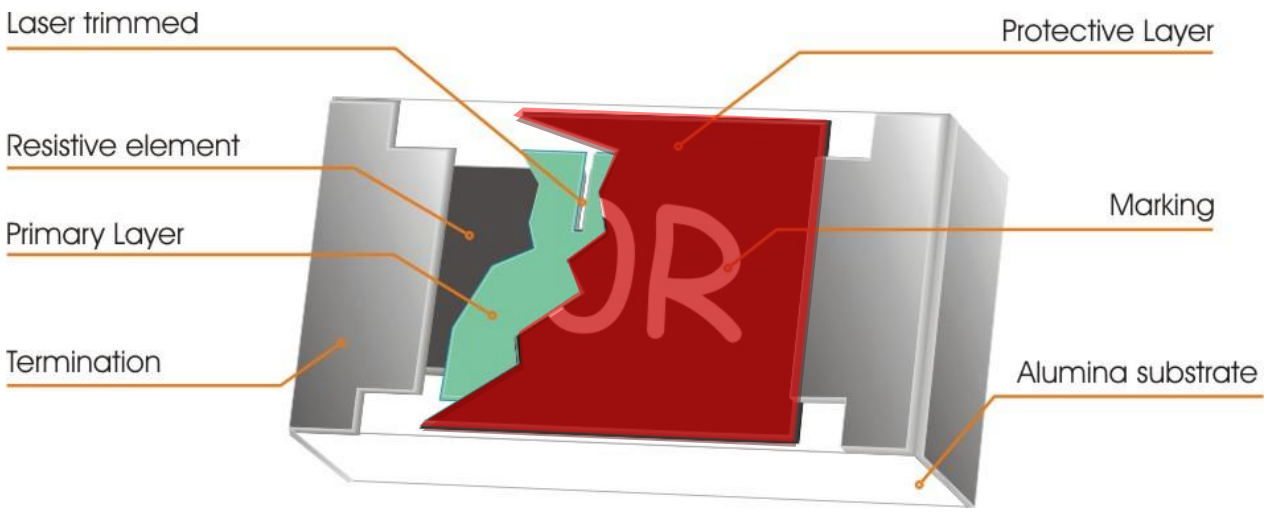

Fig 1. Construction of Chip-R

QUICK REFERENCE DATA

Type	Size	Power Rating at 70℃	Max. RCWV	Max. Overload Voltage	Resistance Tolerance	Temperature Coefficient (ppm/℃)	Resistance Range		Standard Resistance Values
							Min.	Max.	
WF06N	0603	1/10W	200V	400V	±1%(F)	±100	100KΩ	10MΩ	E96/E24
					±5%(J)	±200	100KΩ	22MΩ	E24
WF08N	0805	1/8W	400V	800V	±1%(F)	±100	100KΩ	10MΩ	E96/E24
					±5%(J)	±200	100KΩ	22MΩ	E24
WF12N	1206	1/4W	800V	1600V	±1%(F)	±100	100KΩ	10MΩ	E96/E24
					±1%(F)	±200	11MΩ	22MΩ	E24
					±5%(J)	±200	100KΩ	100MΩ	E24
WF20N	2010	1/2W	2000V	3000V	±1%(F)	±100	100KΩ	10MΩ	E96/E24
					±1%(F)	±200	11MΩ	22MΩ	E24
					±5%(J)	±200	100KΩ	100MΩ	E24
WF25N	2512	1W	3000V	4000V	±1%(F)	±100	100KΩ	10MΩ	E96/E24
					±1%(F)	±200	11MΩ	22MΩ	E24
					±5%(J)	±200	100KΩ	100MΩ	E24

Note:

1. This is the maximum voltage that may be continuously supplied to the resistor element, see “IEC publication 60115-8”

2. Max. Operation Voltage : So called RCWV (Rated Continuous Working Voltage) is determined by

$$RCWV = \sqrt{Rated\,Power \times Resistance\,Value}$$ or Max. RCWV listed above, whichever is lower.

MECHANICAL DATA

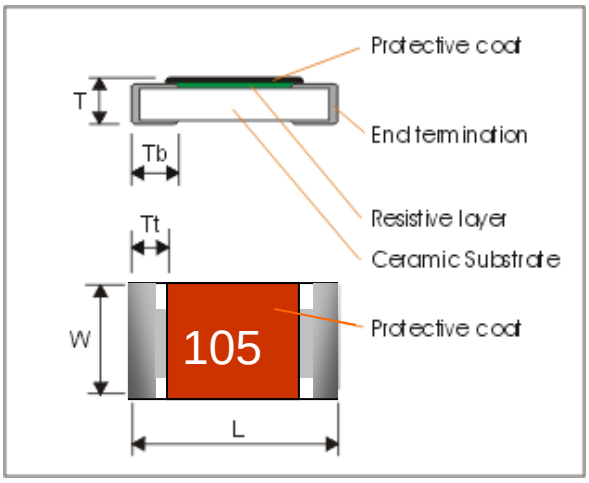

Symbol	WF25N	WF 20N	WF12N	WF08N	WF06N
L	6.40 ± 0.20	5.00 ± 0.20	3.10 ± 0.10	2.00 ± 0.10	1.60 ± 0.10
W	3.20 ± 0.20	2.50 ± 0.20	1.60 ± 0.10	1.25 ± 0.10	0.80 ± 0.10
T	0.60 ± 0.15	0.60 ± 0.10	0.55 ± 0.10	0.50 ± 0.10	0.45 ± 0.10
Tt	0.60 ± 0.25	0.60 ± 0.25	0.45 ± 0.20	0.35 ± 0.20	0.30 ± 0.20
Tb	0.90 ± 0.25	0.60 ± 0.25	0.50 ± 0.20	0.40 ± 0.20	0.30 ± 0.20

MARKING

For E24 ±5% series, each resistor is marked with a three–digit code on the protective coating to designate the nominal resistance value.

0603/0805/1206/2010/2512



301 → $30 \times 10^{1} = 300\,\Omega$

For E24/E96 ±1% series, each resistor is marked with a four–digit code on the protective coating to designate the nominal resistance value. 0603 is marked with three-digits.

0805/1206/2010/2512



1542 → $154 \times 10^{2} = 15.4\,K\Omega$

E24 ±1% : 3 Digits marking to identify the resistance value

0603



222 → $22 \times 10^{2} = 2.2\,K\Omega$

E96 ±1% : 3 Digits marking to identify the resistance value

0603



01B → Refer 0603 marking table = $1\,K\Omega$

FUNCTIONAL DESCRIPTION

Product characterization

Standard values of nominal resistance are taken from the E24/E96 series for resistors with a tolerance of ±1%, ±5%. The values of the E24/E96 series are in accordance with “IEC publication 60063”.

Derating curve

The power that the resistor can dissipate depends on the operating temperature; see Fig.2

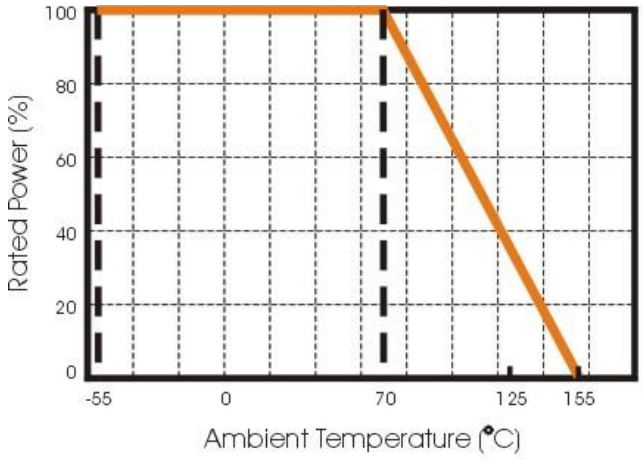

Figure 2 Maximum dissipation in percentage of rated power as a function of the ambient temperature

Recommend Solder Pad Dimensions :

Type	W	D	L
WF06N	0.90	1.00	3.00
WF08N	1.30	1.15	3.50
WF12N	1.80	1.30	4.70
WF20N	3.00	1.50	6.80
WF25N	3.70	1.60	7.60

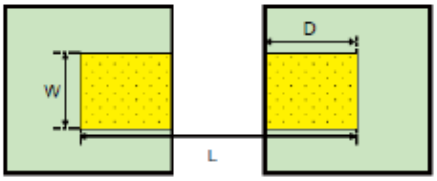

Unit:mm

SOLDERING CONDITION

The robust construction of chip resistors allows them to be completely immersed in a solder bath of 260°C for 10 seconds. Therefore, it is possible to mount Surface Mount Resistors on one side of a PCB and other discrete components on the reverse (mixed PCBs).

Surface Mount Resistors are tested for solderability at 235°C during 2 seconds. The test condition for no leaching is 260°C for 30 seconds. Typical examples of soldering processes that provide reliable joints without any damage are given in Fig 3.

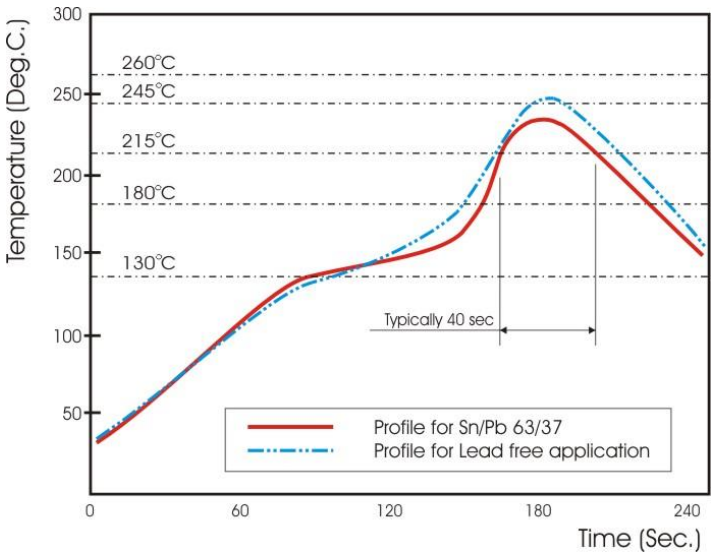

Fig 3. Infrared soldering profile

CATALOGUE NUMBERS

The resistors have a catalogue number starting with .

WF25	N	105	J	T	L
Size code WF25 : 2512 WF20 : 2010 WF12 : 1206 WF08 : 0805 WF06 : 0603	**Type code** N :High Voltage UL certified	**Resistance code** ±5% E24: 2 significant digits followed by no. of zeros and a blank 1 MΩ = 105 ±1%, E24+E96: 3 significant digits followed by no. of zeros 1 MΩ = 1004	**Tolerance** J : ±5% F : ±1%	**Packaging code** T : 7" inch reel 0603/0805/1206: paper tape, 5kpcs/reel 2010,2512 : plastic tape, 4kpcs/reel	**Termination code** L = Sn base (lead free)

Tape packaging WF12, WF08, WF06 : 8mm width paper taping 5,000pcs per reel.

WF25；WF20: 12mm width plastic taping 4,000pcs per reel.

Storage &. Handling

… Products are recommended to be used up within one year as ensured shelf life.

Check solder ability in case shelf life extension is needed.

… To store products with following condition:

Temperature:5 to 40℃ ; Humidity: 20 to 70% relative humidity.

TEST AND REQUIREMENTS(JIS C 5201-1 : 1998)

Essentially all tests are carried out according to the schedule of IEC publication 115-8, category **LCT**/**UCT**/56(rated temperature range : **L**ower **C**ategory **T**emperature, **U**pper **C**ategory **T**emperature; damp heat, long term, 56 days). The testing also meets the requirements specified by EIA, EIAJ and JIS.

The tests are carried out in accordance with IEC publication 68, "Recommended basic climatic and mechanical robustness testing procedure for electronic components" and under standard atmospheric conditions according to IEC 60068-1, subclause 5.3. Unless otherwise specified, the following value supplied :

Temperature: 15°C to 35°C.

Relative humidity: 45% to 75%.

Air pressure: 86kPa to 106 kPa (860 mbar to 1060 mbar).

All soldering tests are performed with midly activated flux.

TEST	PROCEDURE	REQUIREMENT
Temperature Coefficient of Resistance(T.C.R) **Clause 4.8**	Natural resistance change per change in degree centigrade. $\frac{R_2 - R_1}{R_1(t_2 - t_1)} \times 10^6$ (ppm/°C) R_1 : Resistance at reference temperature R_2 : Resistance at test temperature t_1 : 20°C+5°C-1°C	Refer to "QUICK REFERENCE DATA"
Short time overload (S.T.O.L) **Clause 4.13**	Permanent resistance change after a 5 second application of 5 times of rated power.	No visible damage J: ΔR/R max. ±(2%+0.1Ω) F: ΔR/R max. ±(1%+0.1Ω)
Resistance to soldering heat(R.S.H) **Clause 4.18**	Un-mounted chips completely immersed for 10±1second in a SAC solder bath at 260℃±5°C	no visible damage ΔR/R max. ±(1%+0.15Ω)
Solderability **Clause 4.17**	Un-mounted chips completely immersed for 3±0.5second in a SAC solder bath at 245℃±5℃	good tinning (>95% covered) no visible damage
Temperature cycling **Clause 4.19**	30 minutes at -55°C±3°C, 2~3 minutes at 20°C+5°C-1°C, 30 minutes at +155°C±3°C, 2~3 minutes at 20°C+5°C-1°C, total 5 continuous cycles	no visible damage ΔR/R max. ±(1%+0.1Ω)
Load life (endurance) **Clause 4.25**	1000 +48/-0 hours, loaded with RCWV or Vmax in chamber controller 70±2°C, 1.5 hours on and 0.5 hours off	no visible damage J: ΔR/R max. ±(3%+0.1Ω) F: ΔR/R max. ±(1%+0.1Ω)
Load life in Humidity **Clause 4.24**	1000 +48/-0 hours, loaded with RCWV or Vmax in humidity chamber controller at 40°C±2°C and 95% relative humidity, 1.5hours on and 0.5 hours off	no visible damage J: ΔR/R max. ±(3%+0.1Ω) F: ΔR/R max. ±(1%+0.1Ω)
Bending strength **Clause 4.33**	Resistors mounted on a 90mm glass epoxy resin PCB(FR4), 2512, 2010, 1206 bending : 2 mm once for 10 seconds 0805, 0603 bending: 3mm once for 10 seconds	ΔR/R max. ±(0.5%+0.05Ω)
Insulation Resistance **Clause 4.6**	Apply voltage 100+/-15V for 1minute	R≧1GΩ

PACKAGING

Paper Tape specifications (unit :mm)

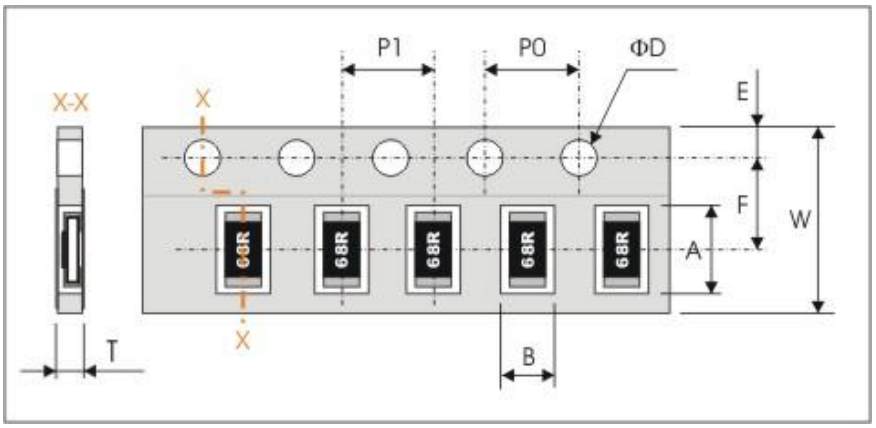

Series No.	A	B	W	F	E
WF25N	6.70±0.20	3.50±0.20	12.00±0.30	5.50±0.10	1.75±0.10
WF20N	5.50±0.20	2.80±0.20			
WF12N	3.60±0.20	2.00±0.20	8.00±0.30	3.50±0.20	1.75±0.10
WF08N	2.40±0.20	1.65±0.20	8.00±0.30	3.50±0.20	1.75±0.10
WF06N	1.90±0.20	1.10±0.20	8.00±0.30	3.50±0.20	1.75±0.10

Series No.	P1	P0	ΦD	T
WF25N	4.00±0.10	4.00±0.10	$\Phi 1.50^{+0.1}_{-0.0}$	Max. 1.2
WF20N				
WF12N				Max. 1.0
WF08N				
WF06N				0.65±0.10

Reel dimensions

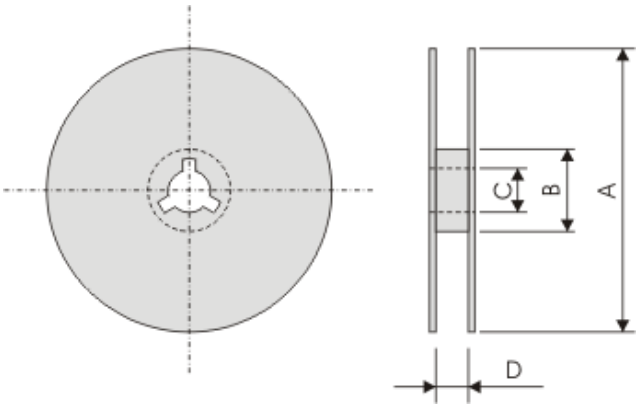

(unit : mm)

Reel / Tape	A	B	C	D
7” reel for 12mm tape	Φ178.0±2.0	Φ60.0±1.0	13.0±0.2	12.4±1.0
7” reel for 8mm tape				9.0±0.5

Appendix

■ 0603 1% Marking Table (Table 1)

Code	E48	E96	Code	E48	E96	Code	E48	E96	Code	E48	E96
01	100	100	25	178	178	49	316	316	73	562	562
02		102	26		182	50		324	74		576
03	105	105	27	187	187	51	332	332	75	590	590
04		107	28		191	52		340	76		604
05	110	110	29	196	196	53	348	348	77	619	619
06		113	30		200	54		357	78		634
07	115	115	31	205	205	55	365	365	79	649	649
08		118	32		210	56		374	80		665
09	121	121	33	215	215	57	383	383	81	681	681
10		124	34		221	58		392	82		698
11	127	127	35	226	226	59	402	402	83	715	715
12		130	36		232	60		412	84		732
13	133	133	37	237	237	61	422	422	85	750	750
14		137	38		243	62		432	86		768
15	140	140	39	249	249	63	442	442	87	787	787
16		143	40		255	64		453	88		806
17	147	147	41	261	261	65	464	464	89	825	825
18		150	42		267	66		475	90		845
19	154	154	43	274	274	67	487	487	91	866	866
20		158	44		280	68		499	92		887
21	162	162	45	287	287	69	511	511	93	909	909
22		165	46		294	70		523	94		931
23	169	169	47	301	301	71	536	536	95	953	953
24		174	48		309	72		549	96		976

Code	A	B	C	D	E	F	G	H	X	Y	Z
Multiplier	10^{0}	10^{1}	10^{2}	10^{3}	10^{4}	10^{5}	10^{6}	10^{7}	10^{-1}	10^{-2}	10^{-3}

※ All product specification and data are subject to change without notice.