ISO9001 & ISO14001 & TS16949 **CHILISIN ELECTRONICS CORP.**

RoHS & Halogen Free & REACH Compliance.

SPECIFICATION FOR APPROVAL

Customer：	佳世達			
Customer P/N:	6H.22160.0N6			
Drawing No：	**CE1-880922**			
Quantity：	**0**	**Pcs.**	**Date：**	**2018/08/29**
Chilisin P/N：	**PBY201209T-221Y-N3A**			

SPECIFICATION ACCEPTED BY:	
COMPONENT ENGINEER	
ELECTRICAL ENGINEER	
MECHANICAL ENGINEER	
APPROVED	
REJECTED	

奇力新電子股份有限公司
Chilisin Electronics Corp
No. 29, Alley 301, Tehhsin Rd.,
Hukou,Hsinchu 303, Taiwan
TEL：+886-3- 599-2646
FAX：+886-3- 599-9176
E-mail：sales@chilisin.com
http：//www.chilisin.com

東莞奇力新電子(東莞廠)有限公司
Chilisin Electronics (Dongguan) Co., Ltd.
No. 78, Puxing Rd., Yuliangwei Administration Area,
Qingxi Town, Dongguan City, Guangdong,China
TEL：+86-769-8773-0251~3
FAX： +86-769-8773-0232
E-mail：cect@chilisin.com

奇力新電子(越南廠)有限公司
Chilisin Electronics (Vietnam) Limited
No 143 - 145, Road No 10, VSIP Hai Phong,
Lap Le Commune, Thuy Nguyen Dist,
Haiphong City, Vietnam
Tel：84-316 255 688 Fax：84-316 255 689
E-mail：sales@chilisin.com

奇力新電子(湖南廠)有限公司
HuNan Chilisin Electronics Technology Co., Ltd
No. 8, Shaziao Liangshuijing Town, Yuanling
County, Huaihua City, Hunan Province 419601,
China
Tel：86-745-867-5882
E-mail：cect@chilisin.com

Drawn by	Checked by	Approved by
賴碧玉 **hebe.lai**	邱明傑 **Joseph.Chiu**	鍾瑞民 **jacky.chung**

ISO9001 & ISO14001 & TS16949 CHILISIN ELECTRONICS CORP.

PBY201209T Series Specification

1 Scope:

This specification applies to MULTILAYER FERRITE CHIP BEADS

2 Part Numbering:

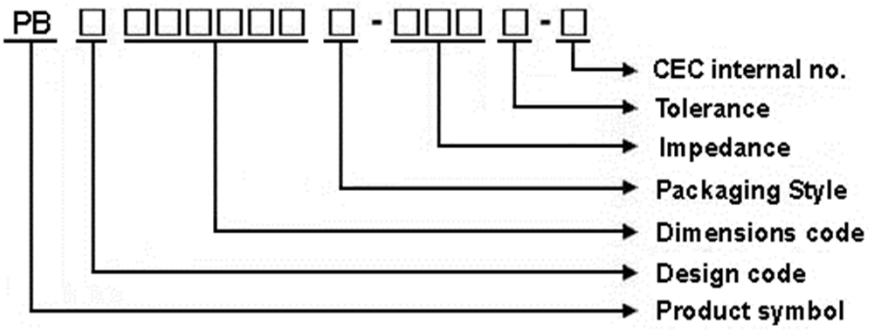

3 Rating:

Operating Temperature: －５５℃～１２５℃(Including self - temperature rise)

Storage Temperature: －５５℃～１２５℃(after PCB)
－５℃~４０℃,Humidity ４０%~７０%(before PCB)

Packaged Storage Temperature: －10℃～４０℃,Humidity ４０%～７０%

4 Marking:

No Marking

5 Standard Testing Condition

	Unless otherwise specified	In case of doubt
Temperature	Ordinary Temperature(15 to 35℃)	20 to 30℃
Humidity	Ordinary Humidity(25 to 85% RH)	50 to 80 %RH

PBY201209T Series Specification

6 Configuration and Dimensions:

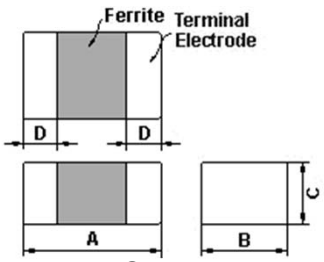

Dimensions in mm

TYPE	PB201209
A	2.00±0.20
B	1.25±0.20
C	0.90±0.20
D	0.50±0.30

7 Electrical Characteristics:

Part No.	Impedance (Ω)	Test Freq.	RDC (Ω)Max.	Rated Current (mA)Max.
PBY201209T-221□-N3A	220	100 MHz,200 mV	0.08	3000

NOTE: □-tolerance Y=±25% / T=±30%

1.Operating temperature range －５５℃～１２５℃(Including self - temperature rise)

2.Rate Current : Applied the current to coils, the temperature rise shall not be more than 30℃

3.As for PB/UPB type. Rated Current is derated as right figure depending on the operating temprature

"-N" FOR COMPLETELY LEAD FREE TYPE(INCLUDING FERRITE BODY & SOLDER)

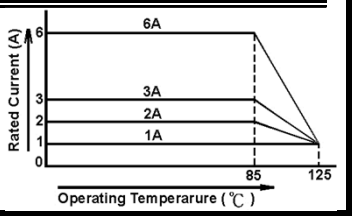

PBY201209T Series Specification

8 PBY201209T Series

8.1 Construction:

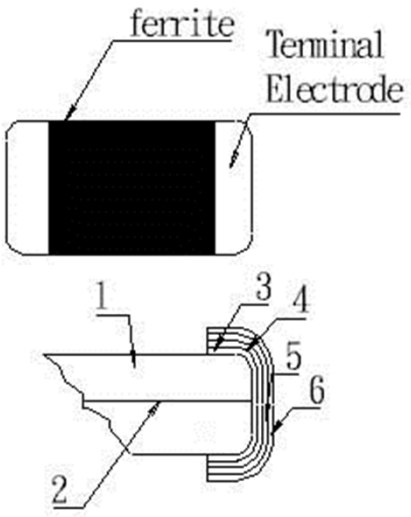

8.2 Material List:

No	Part	Material
1	Ferrite Substance	NiO-CuO-ZnO-Ferrite
2	Silver electrode	Ag
3	Silver electrode	Ag
4	Cu plating	Cu ≧1.0um
5	Ni plating	Ni ≧1.0um
6	Sn plating	Sn ≧3.0um

PBY201209T Series Specification

9 Reliability Of Ferrite Multilayer Chip Bead

1-1.Mechanical Performance

No	Item	Specification	Test Method
1-1-1	Flexure Strength	The forces applied on the right conditions must not damage the terminal electrode and the ferrite	Test device shall be soldered on the substrate Substrate Dimension: 100x40x1.6mm Deflection: 2.0mm Keeping Time: 30sec *For 100505, substrate dimension is 100x40x0.8mm
1-1-2	Vibration		Test device shall be soldered on the substrate Oscillation Frequency: 10 to 55 to 10Hz for 1min Amplitude: 1.5mm Time: 2hrs for each axis (X, Y & Z), total 6hrs
1-1-3	Resistance to Soldering Heat	Appearance: No damage More than 75% of the terminal electrode should be covered with solder. Impedance : within ±30% of initial value	Pre-heating: 150℃, 1min Solder Composition: Sn/Ag3.0/Cu0.5(Pb-Free) Solder Temperature: 260±5℃ Immersion Time: 10±1sec
1-1-4	Solder ability	The electrodes shall be at least 95% covered with new solder coating	Pre-heating: 150℃, 1min Solder Composition: Sn/Ag3.0/Cu0.5(Pb-Free) Solder Temperature: 245±5℃(Pb-Free) Immersion Time: 4±1sec
1-1-5	Terminal Strength Test	No split termination Chip F Mounting Pad	Test device shall be soldered on the substrate, then apply a force in the direction of the arrow. Force : 5N Keeping Time: 10±1sec

1-2.Environmental Performance

No	Item	Specification	Test Method
1-2-1	Temperature Cycle	Appearance: No damage Impedance: within±30% of initial value	One cycle: Step / Temperature (℃) / Time (min) 1 / -55±3 / 30 2 / 25±2 / 3 3 / 125±3 / 30 4 / 25±2 / 3 Total: 100cycles Measured after exposure in the room condition for 24hrs
1-2-2	Humidity Resistance		Temperature: 40±2℃ Relative Humidity: 90 ~ 95% / Time: 1000hrs Measured after exposure in the room condition for 24hrs
1-2-3	High Temperature Resistance		Temperature: 125±3℃ / Relative Humidity: 0% Applied Current: Rated Current /Time: 1000hrs Measured after exposure in the room condition for 24hrs
1-2-4	Low Temperature Resistance		Temperature: -55±3℃ Relative Humidity: 0% / Time: 1000hrs Measured after exposure in the room condition for 24hrs

ISO9001 & ISO14001 & TS16949 CHILISIN ELECTRONICS CORP.

PBY201209T Series Specification

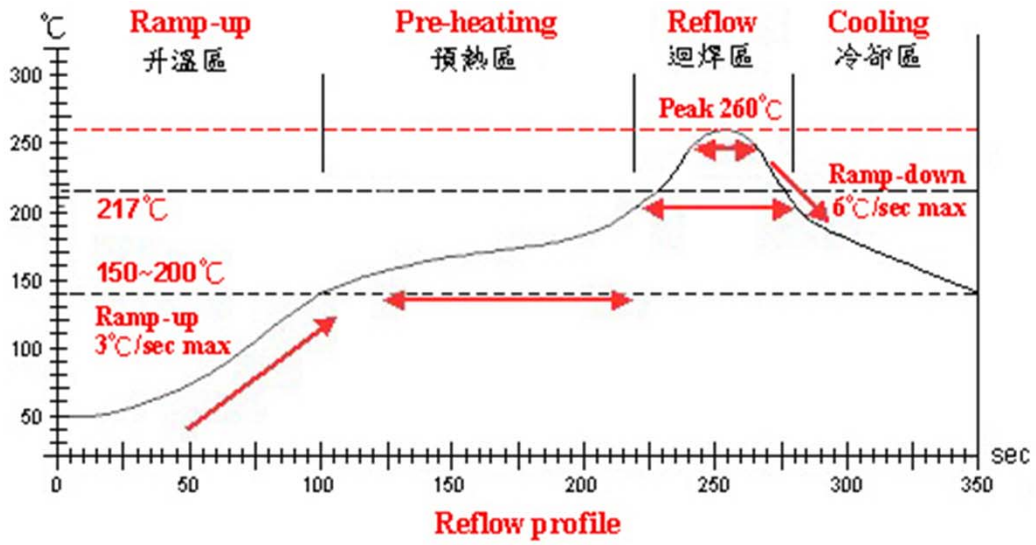

Reflow profile

Lead-Free(LF) 標準溫度分析範圍 Refer to J-STD-020C

管制項目 Item.	升溫區 Ramp-up	預熱區 Pre-heatimg	迴焊區 Reflow	Peak Temp	冷卻區 Cooling
溫度範圍 Temp.scope	R.T.~150℃	150℃~200℃	217℃	260±5℃	Peak Temp.~150℃
標準時間 Time spec.	—	60~180 sec	60~150 sec	20~40 sec	—
實際時間 Time result	—	75~100 sec	90~120 sec	20~35 sec	—

NOTE :

1. Re-flow possible times : within 2 times
2. Nitrogen adopted is recommended while in re-flow

PBY201209T Series Specification

10 Product Test Data

Form No.: QF-1419
Edition: 2

Chilisin P/N: PBY201209T-221Y-N

Test Item (unit)	Z (Ω)	RDC (Ω)	A m/m	B m/m	C m/m	D m/m					
Customer Requirement	220±25%										
Spec Criteria		0.08Max.	2.0±0.2	1.25±0.2	0.9±0.2	0.5±0.3					
Test Condition	200mV 100MHz										
1	217	0.03	1.96	1.26	0.89	0.54					
2	215	0.031	2.01	1.23	0.88	0.56					
3	208	0.029	1.97	1.23	0.87	0.57					
4	225	0.031	1.94	1.25	0.89	0.54					
5	202	0.031	1.96	1.26	0.88	0.55					
6	219	0.029	1.97	1.26	0.87	0.51					
7	222	0.03	1.93	1.25	0.96	0.54					
8	216	0.029	1.96	1.25	0.92	0.55					
9	219	0.031	1.94	1.24	0.85	0.53					
10	207	0.031	1.96	1.24	0.88	0.52					
11											
12											
13											
14											
15											
$\overline{X}$	215	0.0302	1.96	1.247	0.889	0.541					
R	23	0.002	0.08	0.03	0.11	0.06					
Customer Sample											

Test Instrument

HP4291A RF IMPEDANCE / MATERIAL ANALYZER FOR Z
CHEN HWA 502BC / HP4338B FOR RDC

Appearance and Dimensions:

Appearance: Visual inspection according to inspection criteria.
Dimension: Measured with slide calipers.

Test Conditions:

	Unless Otherwise Specified	In Case of Doubt
Temperature	Ordinary Temperature (15 to 35℃)	20 to 30℃
Humidity	Ordinary Humidity (25 to 85 %RH)	50 to 80 %RH

ISO9001 & ISO14001 & TS16949 CHILISIN ELECTRONICS CORP.

包裝Label 之零件 Part number 說明:

REEL

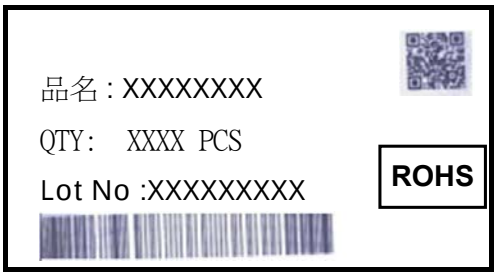

Box

條碼



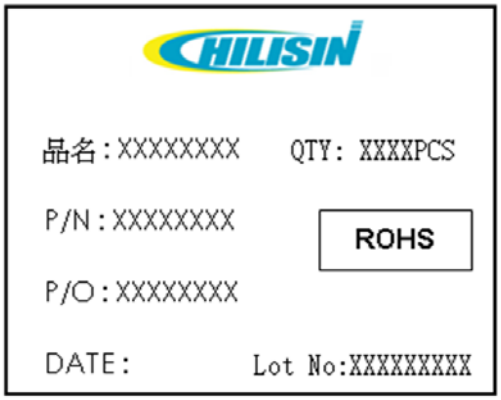

Carton

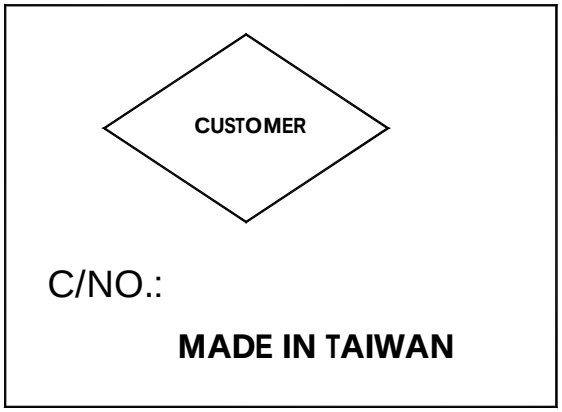

Item :

P/N :

奇力新品名:

P/O :

QTY :

DATE :

N.G : KG G.W: KG

PBY201209T Series Specification

11 Packaging:

11.1 Packaging -Cover Tape

The force for tearing off cover tape is 10 to 100 grams in the arrow direction.

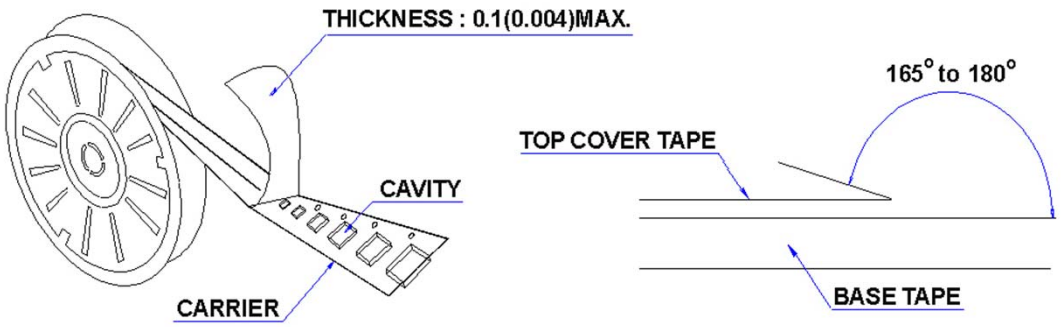

11.2 Packaging Quantity

TYPE	PCS/REEL
PB060303	15000
PB100505	10000
PB160808	4000
PB201209	4000

11.3 Reel Dimensions

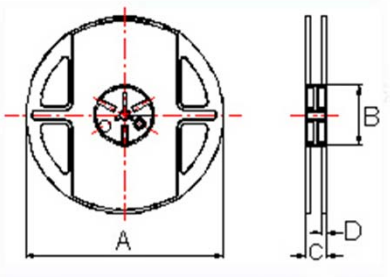

Dimensions in mm

TYPE	A	B	C	D
PB060303	178	60	12	1.5
PB100505	178	60	12	1.5
PB160808	178	60	12	1.5
PB201209	178	60	12	1.5

PBY201209T Series Specification

11 Packaging:

11.4 Tape Dimensions in mm

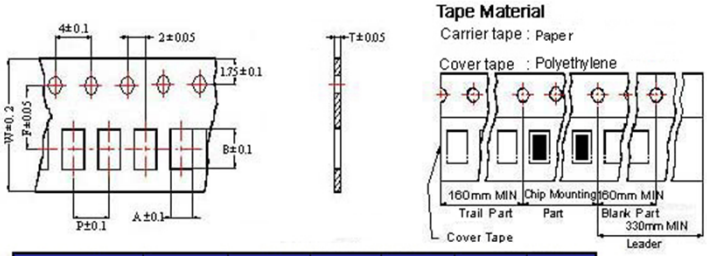

TYPE	A	B	T	W	P	F
PB060303	0.37	0.67	0.42	8	2	3.5
PB100505	0.62	1.12	0.60	8	2	3.5
PB160808	1.05	1.85	0.95	8	4	3.5
PB201209	1.50	2.30	0.97	8	4	3.5

12 Recommended Land Pattern:

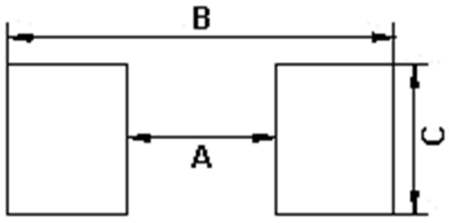

Dimensions in mm

TYPE	A	B	C
PB201209	1.0 ~ 1.2	2.6 ~ 4.0	1.0 ~ 1.2

13 Note:

1. Please make sure that your product has been evaluated and confirmed against your specifications when our product is mounted to your product.
2. Do not knock nor drop.
3. All the items and parameters in this product specification have been prescribed on the premise that our product is used for the purpose,under the condition and in the environment agreed upon between you and us. You are requested not to use our product deviating from such agreement.
4. Please keep the distance between transformer/coil and other components (refer to the standard IEC 950)
5. The moisture sensitivity level (MSL) of products is classified as level 1.

PBY201209T Series Specification

14 Graph: PBY201209T-221Y-N3A

