RTD2525AR-CG

MULTI-FUNCTION DISPLAY CONTROLLER

DATASHEET

(CONFIDENTIAL: Development Partners Only)

Rev. 1.0
26 July 2016

Realtek Confidential for Qisda

Realtek Semiconductor Corp.
No. 2, Innovation Road II, Hsinchu Science Park, Hsinchu 300, Taiwan
Tel.: +886-3-578-0211. Fax: +886-3-577-6047
www.realtek.com

COPYRIGHT

©2016 Realtek Semiconductor Corp. All rights reserved. No part of this document may be reproduced, transmitted, transcribed, stored in a retrieval system, or translated into any language in any form or by any means without the written permission of Realtek Semiconductor Corp.

DISCLAIMER

Realtek provides this document 'as is', without warranty of any kind. Realtek may make improvements and/or changes in this document or in the product described in this document at any time. This document could include technical inaccuracies or typographical errors.

TRADEMARKS

Realtek is a trademark of Realtek Semiconductor Corporation. Other names mentioned in this document are trademarks/registered trademarks of their respective owners.

USING THIS DOCUMENT

This document is intended for the software engineer's reference and provides detailed programming information.

Though every effort has been made to ensure that this document is current and accurate, more information may have become available subsequent to the production of this guide.

REVISION HISTORY

Revision	Release Date	Summary
1.0	2016/07/26	First release.

Realtek Confidential for Qisda

Table of Contents

1. GENERAL DESCRIPTION 1

2. FEATURES 2

3. SYSTEM APPLICATIONS 5

4. BLOCK DIAGRAM 6

5. PIN ASSIGNMENTS 7

6. PIN ASSIGNMENTS TABLE 8

7. REGISTER DESCRIPTION 14

8. ELECTRICAL SPECIFICATIONS 15

8.1. Recommended Operating Conditions 15
8.2. Absolute Maximum Ratings 15
8.3. Reset Period 15

9. MECHANICAL SPECIFICATIONS 16

10. ORDERING INFORMATION 17

List of Tables

TABLE 1. SIGNALS PIN ASSIGNMENT 8
TABLE 2. RECOMMENDED OPERATING CONDITIONS 15
TABLE 3. ABSOLUTE MAXIMUM RATINGS 15
TABLE 4. RESET PERIOD 15
TABLE 5. MECHANICAL SPECIFICATION OF 128 PIN PACKAGE 16
TABLE 7. ORDERING INFORMATION 17

List of Figures

FIGURE 1. DATA PATH 6
FIGURE 2. PIN ASSIGNMENTS 7
FIGURE 3. MECHANICAL SPECIFICATION OF 128 PIN PACKAGE 16

Realtek Confidential for Qisda

1. General Description

The Realtek RTD2525AR-CG monitor controller combines an analog RGB input interface, a HDMI 1.4a compliant digital input interface with HDCP1.4, and a DP1.2 digital input interface with HDCP1.4. The embedded MCU is based on an industrial standard 8051 core with external serial flash.

The RTD2525AR-CG is suitable for multiple market segments and display applications, such as monitor, All in One PC, and embedded applications.

Realtek Confidential for Qisda

2. Features

General

- Embedded 3DDC with DDC1/2B/CI
- Zoom scaling up and down
- Embedded one MCU with SPI flash controller.
- It contains 4 ADCs in key pad application
- Require only one crystal to generate all timing.
- Programmable internal low-voltage-reset (LVR)
- High resolution 6 channels PWM output, and wide range selectable PWM frequency.
- Support input format up to FHD.

Crystal

- Support 14.318MHz crystal type

Analog RGB Input Interface

- 1 Analog input supported
- Integrated 8-bit triple-channel 210MHz ADC/PLL
- Embedded programmable Schmitt trigger of HSYNC
- Support Sync-On-Green (SOG) and various kinds of composite sync modes
- On-chip high-performance hybrid PLLs
- High resolution true 64 phase ADC PLL
- YPbPr support up to HDTV 1080p resolution

DVI 1.0 Compliant Digital Input Interface with HDCP 1.1

- Single link on-chip TMDS receiver
- Long cable support to 1.65GHz
- Adaptive algorithm for TMDS capability
- Data enable only mode support
- High-Bandwidth Digital Content Protection
- Enhanced protection of HDCP secret key

HDMI 1.4a Compliant Digital Input Interface with HDCP 1.4

- HDMI Input with embedded high speed switch
- Single link on-chip TMDS receiver up to 225MHz.
- Support long cable
- Adaptive algorithm for TMDS capability
- Data enable only mode support
- High-Bandwidth Digital Content Protection (HDCP 1.4)
- Enhanced protection of HDCP secret key
- Capable of 8-channel I2S/SPDIF output in HDMI application
- ATC Lab certification pass HDMI1.4a compliance test
- Support DVI 1.0
- Support FreeSync

Realtek Confidential for Qisda

DisplayPort 1.2 Digital Input Interface with HDCP 1.4

- Support 4 lanes digital input, each lanes speed up to 1.62Gbps and 2.7Gbps
- Support 6-bit, 8-bit, 10-bit, and 12-bit color depth transport
- High-Bandwidth Digital Content Protection (HDCP 1.4)
- Capable of 8-channel I2S/SPDIF output in DP application
- Support VESA Adaptive Sync

Embedded MCU

- Industrial standard 8051 core with external serial flash
- Low speed ADC for various application
- I2C Master hardware supported

Auto Detection /Auto Calibration

- Input format detection
- Compatibility with standard VESA mode and support user-defined mode
- Smart engine for Phase/Image position/Color calibration

Scaling

- Fully programmable zoom ratios
- Independent horizontal/vertical scaling
- Advanced zoom algorithm provides high image quality
- Sharpness/Smooth filter enhancement
- Support non-linear scaling from 4:3 to 16:9 or 16:9 to 4:3

Color Processor

- xvYCC supported
- sRGB compliance
- Dynamic overshoot-smear canceling engine
- Brightness and contrast control
- Programmable 10-bit gamma support
- Peaking/Coring function for video sharpness

VividColorTM

- Independent color management (ICM)
- Dynamic contrast control (DCC)
- Precise color mapping (PCM)
- Support Ultra-Vivid function to enhance image quality

Output Interface

- Fully programmable display timing generator
- Flexible data pair swapping for easier system design.
- Display clock supports up to 93MHz for Single LVDS and 186MHz for Dual LVDS
- LVDS -output interface on single PCB
- Support 8-bit LVDS output
- Spread-Spectrum DPLL to reduce EMI
- Fixed Last Line output for perfect panel capability

Realtek Confidential for Qisda

Embedded OSD

- Embedded 24K SRAM dynamically stores OSD command and fonts
- Support multi-color RAM font, 1, 2 and 4-bit per pixel
- 64 color palette
- Maximum 26 window with alpha-blending /
- gradient / gradient target color / gradient reversed color/ dynamic fade-in/fade-out, bordering/ shadow
- Rotate 90,180,270 degree
- OSD-made internal pattern generator for factory mode
- Support 12x18 ~ 4x18 proportional font
- Hardware decompression for OSD font
- Support OSD scrolling
- Support 2 independent font based OSD

Audio

- Output: IIS , SPDIF
- Embedded Audio DAC
- Embedded headphone amp

Power Supply

- 3.3V / 1.0V power supply
- Low standby current (<11mA)

LiveShowTM Function

- High-performance RTC (response time compensation).

Realtek Confidential for Qisda

3. System Applications

- Display System on Motherboard, Monitor
- Display System for All in One PCs and embedded applications

Realtek Confidential for Qisda

4. Block Diagram

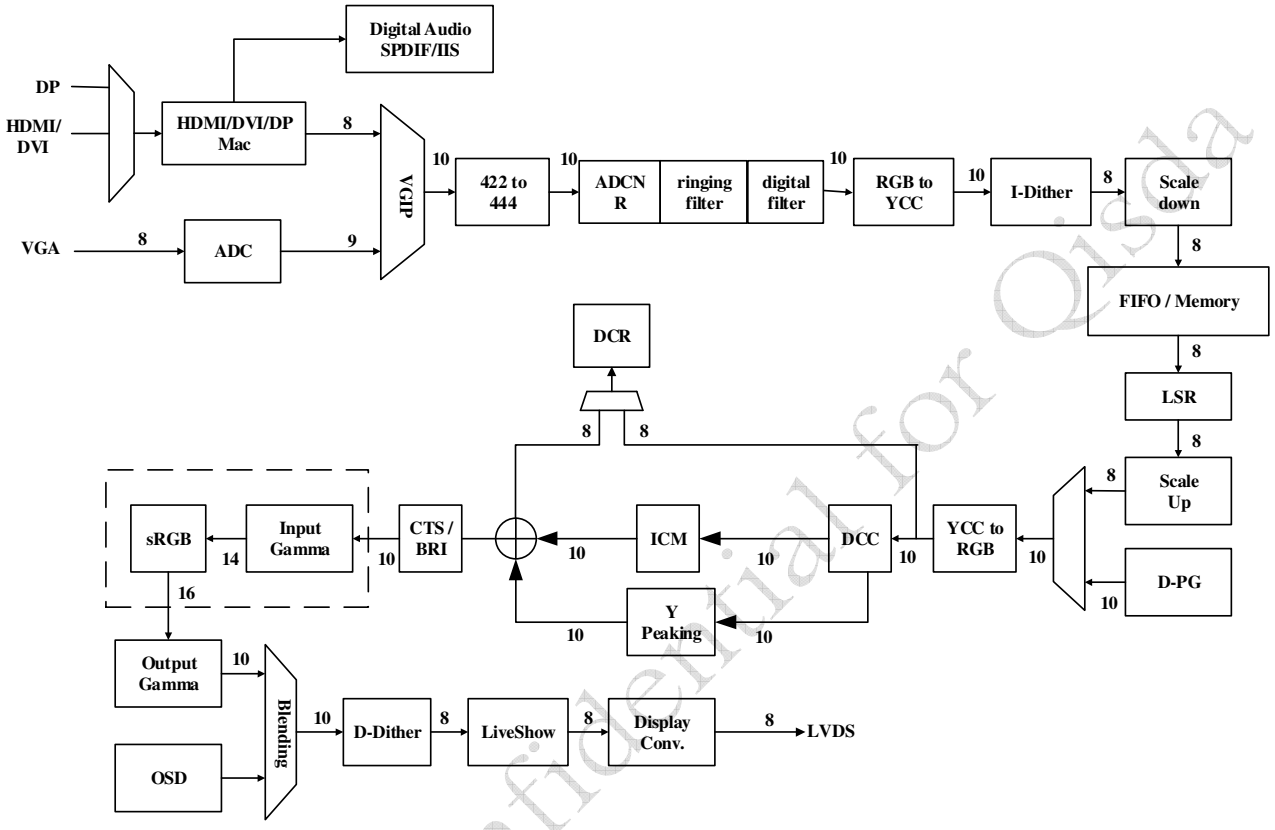

Figure 1. Data Path

Realtek Confidential for Qisda

5. Pin Assignments

128 Pin QFP / LQFP

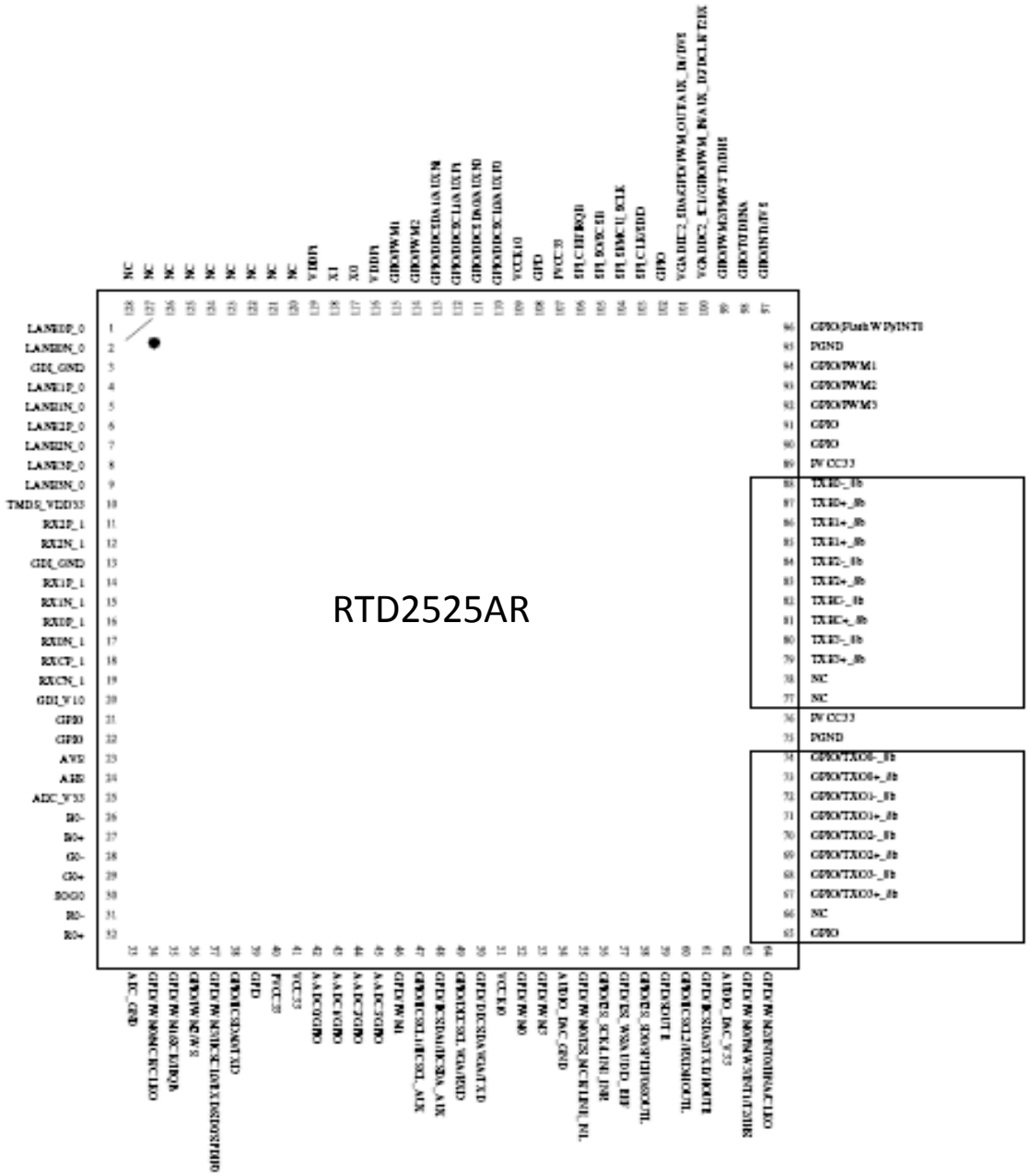

Figure 2. Pin Assignments

6. Pin Assignments Table

(I/O Legend: A = Analog, I = Input, O = Output, P = Power, G = Ground)

Table 1. Signals Pin Assignment

Name	I/O	128Pin #	Description	Note
LANE0P_0	AI	1	DP Differential Signal input	
LANE0N_0	AI	2	DP Differential Signal input	
GDI_GND	AG	3	GDI Ground	
LANE1P_0	AI	4	DP Differential Signal input	
LANE1N_0	AI	5	DP Differential Signal input	
LANE2P_0	AI	6	DP Differential Signal input	
LANE2N_0	AI	7	DP Differential Signal input	
LANE3P_0	AI	8	DP Differential Signal input	
LANE3N_0	AI	9	DP Differential Signal input	
TMDS_VDD33	AP	10	TMDS 3.3V Power	(3.3 V)
RX2P_1	AI	11	TMDS Input	
RX2N_1	AI	12	TMDS Input	
GDI_GND	AG	13	GDI Ground	
RX1P_1	AI	14	TMDS Input	
RX1N_1	AI	15	TMDS Input	
RX0P_1	AI	16	TMDS Input	
RX0N_1	AI	17	TMDS Input	
RXCP_1	AI	18	TMDS Input	
RXCN_1	AI	19	TMDS Input	
GDI_V10	AP	20	GDI 1.0V Power	(1.0 V)
GPIO	IO	21	MCU_GPIO	5V Tolerance when power off
GPIO	IO	22	MCU_GPIO	5V Tolerance when power off
AVS	AI	23	ADC Vertical Sync Input	5V Tolerance when power off
AHS	AI	24	ADC Horizontal Sync Input	5V Tolerance when power off
ADC_V33	AP	25	ADC 3.3V Power	(3.3 V)
B0-	AI	26	Negative BLUE analog input (Pb-)	
B0+	AI	27	Positive BLUE analog input (Pb+)	
G0-	AI	28	Negative GREEN analog input (Y-)	
G0+	AI	29	Positive GREEN analog input	

Realtek Confidential for Qisda

			(Y+)	
SOG0	AI	30	Sync-On-Green	
R0-	AI	31	Negative RED analog input (Pr-)	
R0+	AI	32	Positive RED analog input (Pr+)	
ADC_GND	AG	33	ADC Ground	
GPIO/PWM0/I2S_MCK/CLKO	IO	34	MCU GPIO/PWM/I2S/CLKO	5V Tolerance when power off
GPIO/PWM1/I2S_SCK/ IRQB	IO	35	MCU GPIO/PWM/I2S/IRQB	5V Tolerance when power off
GPIO/PWM2/I2S_WS	IO	36	MCU GPIO/PWM/I2S	5V Tolerance when power off
GPIO/PWM3/IICSCL0/ RXD/I2S_SD0/SPDIF0	IO	37	MCU GPIO/PWM/IIC BUS/UART/I2S/ SPDIF	5V Tolerance when power off
GPIO/ IICSDA0/ TXD	IO	38	MCU GPIO/PWM/IIC BUS/UART/I2S/ SPDIF	5V Tolerance when power off
GPIO	IO	39	MCU GPIO	5V Tolerance when power off
PVCC33	P	40	Pad 3.3V Power	(3.3 V)
VCC33	P	41	3.3V Power	(3.3 V/5 V)
A-ADC0/GPIO	AIO	42	5bits MCU ADC Input/MCU GPIO	3.3 V tolerance when using ADC Input; 5V Tolerance power on when using GPIO
A-ADC1/GPIO	AIO	43	5bits MCU ADC Input/MCU GPIO	3.3 V tolerance when using ADC Input; 5V Tolerance power on when using GPIO
A-ADC2/GPIO	AIO	44	5bits MCU ADC Input/MCU GPIO	3.3 V tolerance when using ADC Input; 5V Tolerance power on when using GPIO
A-ADC3/GPIO	AIO	45	5bits MCU ADC Input/MCU GPIO	3.3 V tolerance when using ADC Input; 5V Tolerance power on when using GPIO
GPIO/PWM1	IO	46	MCU GPIO/PWM	5V Tolerance when power off
GPIO/IICSCL1/ IICSCL_AUX	IO	47	MCU GPIO/IIC BUS/IIC over AUX	5V Tolerance when power off
GPIO/IICSDA1/ IICSDA_AUX	IO	48	MCU GPIO/IIC BUS/IIC over AUX	5V Tolerance when power off
GPIO/DDCSCLVGA/	IO	49	MCU GPIO/VGA IIC BUS/UART	5V Tolerance when power

Realtek Confidential for Qisda

RXD				off
GPIO/DDCSDAVGA/ TXD	IO	50	MCU GPIO/VGA IIC BUS/UART	5V Tolerance when power off
VCCK10	P	51	Digital 1.0V Power	(1.0 V)
GPIO/PWM0	IO	52	MCU GPIO/PWM	5V Tolerance when power off
GPIO/PWM3	IO	53	MCU GPIO/PWM	5V Tolerance when power off
AUDIO_DAC_GND	AG	54	Audio DAC Ground	
GPIO/PWM0/I2S_MCK/LINE_INL	AIO	55	MCU GPIO/PWM/I2S/LINE-IN	3.3V Tolerance
GPIO/I2S_SCK/ LINE_INR	AIO	56	MCU GPIO/I2S/LINE-IN	3.3V Tolerance
GPIO/I2S_WS/ AUDIO_REF	AIO	57	MCU GPIO/I2S/ Audio Reference Resistance	3.3V Tolerance
GPIO/I2S_SD0/SPDIF0/ SOUTL	AIO	58	MCU GPIO/I2S/SPDIF/Speaker Out	3.3V Tolerance
GPIO/SOUTR	AIO	59	MCU GPIO/Speaker Out	3.3V Tolerance
GPIO/IICSCL2//RXD/HOUTL	AIO	60	MCU GPIO/IIC BUS/UART/ Head Phone Out	3.3V Tolerance
GPIO/IICSDA2/TXD/HOUTR	AIO	61	MCU GPIO/IIC BUS/UART/ Head Phone Out	3.3V Tolerance
AUDIO_DAC_V33	AP	62	Audio DAC 3.3V Power	(3.3V)
GPIO/PWM0/PMW3/ INT1/T2/DVI_CTRL2/ HIS	IO	63	MCU GPIO/PWM/MCU EXINT1/ DVI Control Signal/HIS	5V Tolerance when power off
GPIO/PWM2/INT0/ DVI_CTRL1/IENA/ CLKO	IO	64	MCU GPIO/PWM/MCU EXINT0/ DVI Control Signal/IENA/CLKO	5V Tolerance when power off
GPIO	IO	65	MCU GPIO	5V Tolerance when power off
NC	--	66	NC	NC
GPIO/TXO3+_8b	AIO	67	MCU GPIO	3.3V Tolerance
GPIO/TXO3-_8b	AIO	68	MCU GPIO	3.3V Tolerance
GPIO/TXO2+_8b	AIO	69	MCU GPIO	3.3V Tolerance
GPIO/TXO2-_8b	AIO	70	MCU GPIO	3.3V Tolerance

Realtek Confidential for Qisda

GPIO/TXO1+_8b	AIO	71	MCU GPIO	3.3V Tolerance
GPIO/TXO1-_8b	AIO	72	MCU GPIO	3.3V Tolerance
GPIO/TXO0+_8b	AIO	73	MCU GPIO	3.3V Tolerance
GPIO/TXO0-_8b	AIO	74	MCU GPIO	3.3V Tolerance
PGND	DG	75	Pad GND	
PVCC33	P	76	Pad 3.3V Power	(3.3 V)
NC	--	77	NC	NC
NC	--	78	NC	NC
TXE3+_8b	AO	79	LVDS	3.3V Tolerance
TXE3-_8b	AO	80	LVDS	3.3V Tolerance
TXEC+_8b	AO	81	LVDS	3.3V Tolerance
TXEC-_8b	AO	82	LVDS	3.3V Tolerance
TXE2+_8b	AO	83	LVDS	3.3V Tolerance
TXE2-_8b	AO	84	LVDS	3.3V Tolerance
TXE1+_8b	AO	85	LVDS	3.3V Tolerance
TXE1-_8b	AO	86	LVDS	3.3V Tolerance
TXE0+_8b	AO	87	LVDS	3.3V Tolerance
TXE0-_8b	AO	88	LVDS	3.3V Tolerance
PVCC33	P	89	Pad 3.3V Power	(3.3 V)
GPIO	IO	90	MCU GPIO	5V Tolerance when power off

Realtek Confidential for Qisda

GPIO	AI	91	MCU GPIO	5V Tolerance when power off
GPIO/PWM3	AI	92	MCU GPIO/PWM	5V Tolerance when power off
GPIO/PWM2	AP	93	MCU GPIO/PWM	5V Tolerance when power off
GPIO/PWM1	AP	94	MCU GPIO/PWM	5V Tolerance when power off
PGND	DG	95	Pad Ground	
GPIO(Flash WP)/ INT0/	IO	96	MCU GPIO/MCU EXINT0	5V Tolerance when power off
GPIO/INT1/IVS	IO	97	MCU GPIO/MCU EXINT1/IVS	5V Tolerance when power off
GPIO/T0/DENA/	IO	98	MCU GPIO/MCU Timer0	5V Tolerance when power off
GPIO/PWM2/PMW3/T1/DHS	IO	99	MCU GPIO/PWM/MCU Timer1	5V Tolerance when power off
GPIO/PWM_IN/AUX_D2/DCLK/ T2EX/DDCSCLVGA2	AIO	100	MCU GPIO/PWM Input/VGA/AUX D2 Signal/ TTL/T2EX/VGA I2C BUS	5V Tolerance when power off
GPIO/PWM_OUT/ AUX_D1/DVS/ DDCSDAVGA2	AIO	101	MCU GPIO/PWM Output(bypass PWM Input)/AUX D1 Signal/ VGA I2C BUS	5V Tolerance when power off
GPIO	IO	102	MCU GPIO	5V Tolerance when power off
SPI_CLK/SDIO	IO	103	SPI flash serial clock	3.3V Tolerance
SPI_SI/MCU_SCLK	IO	104	SPI flash serial data input	3.3V Tolerance
SPI_SO/SCSB	IO	105	SPI flash serial data output	3.3V Tolerance
SPI_CEB/IRQB	IO	106	SPI flash chip enable	3.3V Tolerance
PVCC33	P	107	3.3V Power	(3.3 V)
GPIO/PWM3	IO	108	MCU GPIO/PWM	5V Tolerance when power off
VCCK10	P	109	Digital Power	(1.0 V)
GPIO/DDCSCL0/AUXP0	AIO	110	MCU GPIO/D0 IIC BUS/AUX	5V Tolerance when power off
GPIO/DDCSDA0/AUXN0	AIO	111	MCU GPIO/D0 IIC BUS/AUX	5V Tolerance when power off
GPIO/DDCSCL1/AUXP1	AIO	112	MCU GPIO/D1 IIC BUS/ AUX	5V Tolerance when power off
GPIO/DDCSDA1/AUXN1	AIO	113	MCU GPIO/D1 IIC BUS/ AUX	5V Tolerance when power off
GPIO/PWM2	IO	114	MCU GPIO/PWM	5V Tolerance when power off
GPIO/PWM1	IO	115	MCU GPIO/PWM	5V Tolerance when power off

Realtek Confidential for Qisda

VDDP1	P	116	VDDP1	(3.3 V)
X0	AO	117	Crystal Output	
XI	AI	118	Crystal Input	
VDDP1	P	119	VDDP1	(3.3 V)
NC	--	120	NC	
NC	--	121	NC	
NC	--	122	NC	
NC	--	123	NC	
NC	--	124	NC	
NC	--	125	NC	
NC	--	126	NC	
NC	--	127	NC	
NC	--	128	NC	

Realtek Confidential for Qisda

7. Register Description

Realtek Confidential for Qisda

8. Electrical Specifications

DC Characteristics

8.1. Recommended Operating Conditions

Table 2. Recommended Operating Conditions

PARAMETER	SYMBOL	MIN	TYP	MAX	UNITS
Voltage on Input (5V tolerance)	V_{IN}	-1		5	V
Supply Voltage	PC99_IN	4.75	5	5.25	
	PVCC	3.14	3.30	3.47	V
	VCCK	0.95	1.0	1.05	V
Electrostatic Discharge	V_{ESD}			±2.5	kV
Latch-Up	I_{LA}			±100	mA
Ambient Operating Temperature	T_A	0		70	ºC
Storage Temperature (plastic)	T_{STG}	-55		125	ºC
Thermal Resistance (Junction to Air)	θ_{JA}				ºC/W
Thermal Resistance (Junction to Case)	θ_{JC}				ºC/W
Junction Acceptable Temperature	T_j			125	ºC

8.2. Absolute Maximum Ratings

Table 3. Absolute Maximum Ratings

PARAMETER	SYMBOL	MIN	TYP	MAX	UNITS
Supply Voltage	PC99_IN			5.5	V
	PVCC			3.6	V
	VCCK			1.1	V
Storage Temperature (plastic)	T_{STG}			150	ºC
Junction Acceptable Temperature	T_j			150	ºC

Note : Operation under the absolute maximum ratings does not imply well-functioning. Long-term stress to the absolute maximum ratings would probably affect the device reliability or further cause permanent damage.

8.3. Reset Period

Table 4. Reset Period

PARAMETER	SYMBOL	MIN	TYP	MAX	UNITS
Reset Pulse Period	Trst-en[1]	1120			ns
Power-on-Reset Period	Tpor-rst[2]	131	146	160	ms

1. 16*2* EMB_OSC_cycle(1/28Mhz)
2. 65536*16*4*EMB_OSC_cycle(1/28Mhz)

Realtek Confidential for Qisda

9. Mechanical Specifications

Low Profile Plastic Quad Flat Package 128 Leads 14x14mm2 Outline

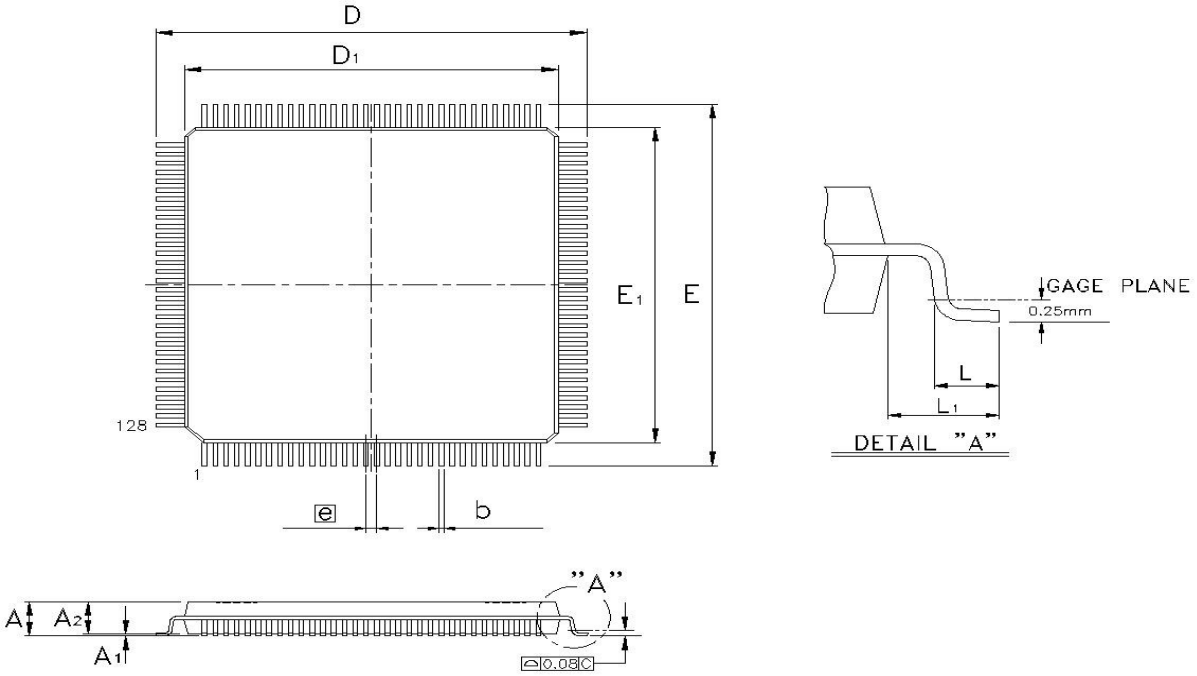

Figure 3. Mechanical Specification of 128 pin package

Table 5. Mechanical Specification of 128 pin package

Symbol	Dimension in mm			Dimension in inch		
	Min	Nom	Max	Min	Nom	Max
A	—	—	1.60	—	—	0.063
A_1	0.05	—	0.15	0.002	—	0.006
A_2	1.35	1.40	1.45	0.053	0.055	0.057
b	0.13	0.18	0.23	0.005	0.007	0.09
D/E	16.00BSC			0.630BSC		
D_1/E_1	14.00BSC			0.551BSC		
e	0.40BSC			0.016BSC		
L	0.45	0.60	0.75	0.018	0.024	0.030
L1	1.00 REF			0.039 REF		

Notes：

1. CONTROLLING DIMENSION：MILLIMETER(mm).
2. REFERENCE DOCUMENTL：JEDEC MS-026.

Realtek Confidential

10. Ordering Information

Table 6. Ordering Information

Part No.	VGA	DVI	HDMI	MHL	DP	HDCP	Audio DAC	OD	FRC	Max. Resolution	Output	PKG
RTD2525AR-CG	Yes (210MHz)	Y	Y	N	Y	Y	Y	Y	N	1920*1200	Dual-LVDS	LT128 (green package)

Realtek Confidential for Qisda

Realtek Semiconductor Corp.
Headquarters
No. 2, Innovation Road II
Hsinchu Science Park, Hsinchu 300, Taiwan
Tel.: +886-3-578-0211. Fax: +886-3-577-6047
www.realtek.com