承認書編號　NO : ED-05E1029　　TO :　佳世達　台照

承 認 書

APPROVAL SHEET

FOR AL. ELECTROLYTIC CAPACITORS

承　　認 ：

APPROVED　　BY:

料 號 (Customer)	料 號 (CapXon)	規 格 Description	D ψ *L	加工形式 (mm)	N.W (g)
	SY101M025F070ETDBRZ	100uF/ 25V	8x7	T/A 3.5	0.69

簽認後，請送回一份。

PLEASE RETURN US ONE COPY YOUR SIGED SPECIFICATION A FTER YOU APPROVED OF IT.

核　準 APPROVED BY: 呂 2016-3-29 晏丞

校　對 CHECKED BY: 柯 2016-3-29 美鈴

經　辦 DESIGNED BY: 林 2016-3-29 菁玫

Capxon

☐

英屬維京群島商凱普松科技股份有限公司台灣分公司

CAPXON TECHNOLOGY LIMITED TAIWAN BRANCH

新北市汐止區大同路二段 157 號 5 樓

5F, NO. 157, TA TUNG ROAD, SEC. 2, SHI-CHIH DIST., NEW TAIPEI CITY, TAIWAN, R.O.C.

TEL : 886-2-86926611

FAX : 886-2-86926477 / 86926481

☐

豐賓電子 (深圳) 有限公司

CAPXON ELECTRONIC (SHEN ZHEN) CO., LTD

廣東省深圳市光明新區公明鎮塘尾村塘尾工業區

TANG WEI SECTION, TANG WEI VILLAGE, GONG MING COUNTRY, NEW GUANGMING DISTRICT, SHEN ZHEN, CHINA

TEL : 86-755-27177888

FAX : 86-755-27177802　27177803

PDF 檔案使用 "pdfFactory Pro" 試用版本建立 www.pdffactory.com

CAPXON ELECTRONIC INDUSTRIAL CO., LTD FOR

FOR APPROVAL

Aluminum Electrolytic Capacitors
SY Type

1.Electric Characteristics

CAPXON P/N	Cap. (μF)	Cap Tol. (%)	Rated W.V (VDC)	Surge Volt (VDC)	Max. D.F (%)	Ripple Current 100KHz/105℃ (mA)	Max.IM. 100KHz/20℃ (Ω)	Max. LC (μA)	Oper. Temp. (℃)	Case Size DΦx L (mm)	Load Life /+105℃ (Hrs)	USER P/N
SY101M025F070ETDBRZ	100	±20	25	28.8	12	340	0.25	25	-55~+105	8x7	2000	

2.Diagram of Dimensions (Unit=mm)

.

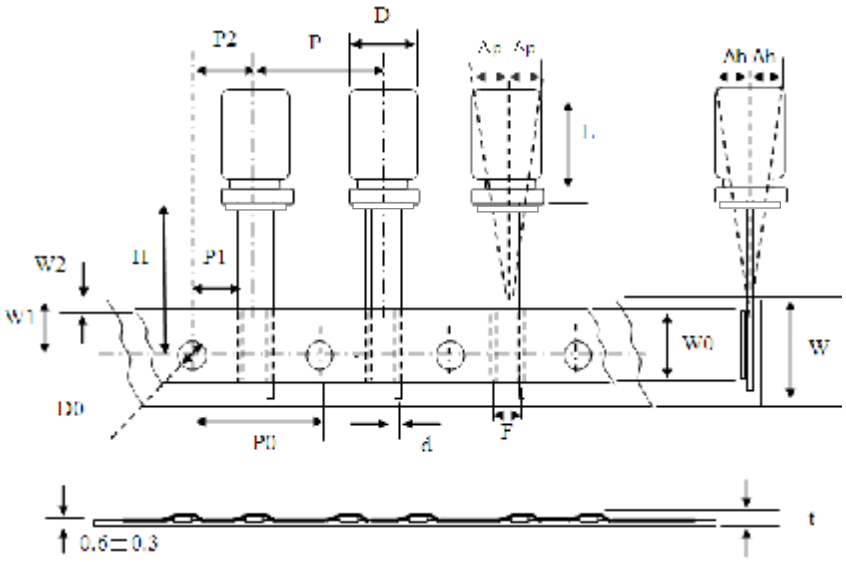

Code	D	L	d	P	P0	P1	P2	F	W	W0	W1	W2	H	D0	△p	△h	t
Tol.	±0.5	±1	±0.02	±1.0	±0.2	±0.7	±1.0	+0.4 -0.2	±0.5	±0.5	±0.5	Max	+0.75 -0.5	±0.2	Max	Max	Max
Item	8	7	0.5	12.7	12.7	4.6	6.35	3.5	18.0	11.0	9.0	2.0	18.5	4.0	1.0	1.0	1.5

3.Remarks:

3.1 Leakage Current Test: I≦0.01CV or 3 (μA) for 6.3 to 50VDC After 1 minute whichever is greater measured with rated working voltage applied**.**

3.2 Operating temperature:6.3~50VDC,0.1～220μF for -55℃～+105℃

3.3 Cap and Dissipation factor (D.F) Test: At +20℃,120Hz.

3.4 Load Life Test: At +105℃ for 2000Hrs.

3.5 Shelf Life Test: At+105℃, for 1000hrs.

3.6 Such spec. capacitors are just fit for this electric model , if you have some other application, please contact with us in advance.

PDF 檔案使用 "pdfFactory Pro" 試用版本建立 www.pdffactory.com

丰宾电子（深圳）有限公司
CAPXON ELECTRONIC (SHEN ZHEN) CO., LTD
材 质 证 明 书

STRUCTURE AND MATERIALS

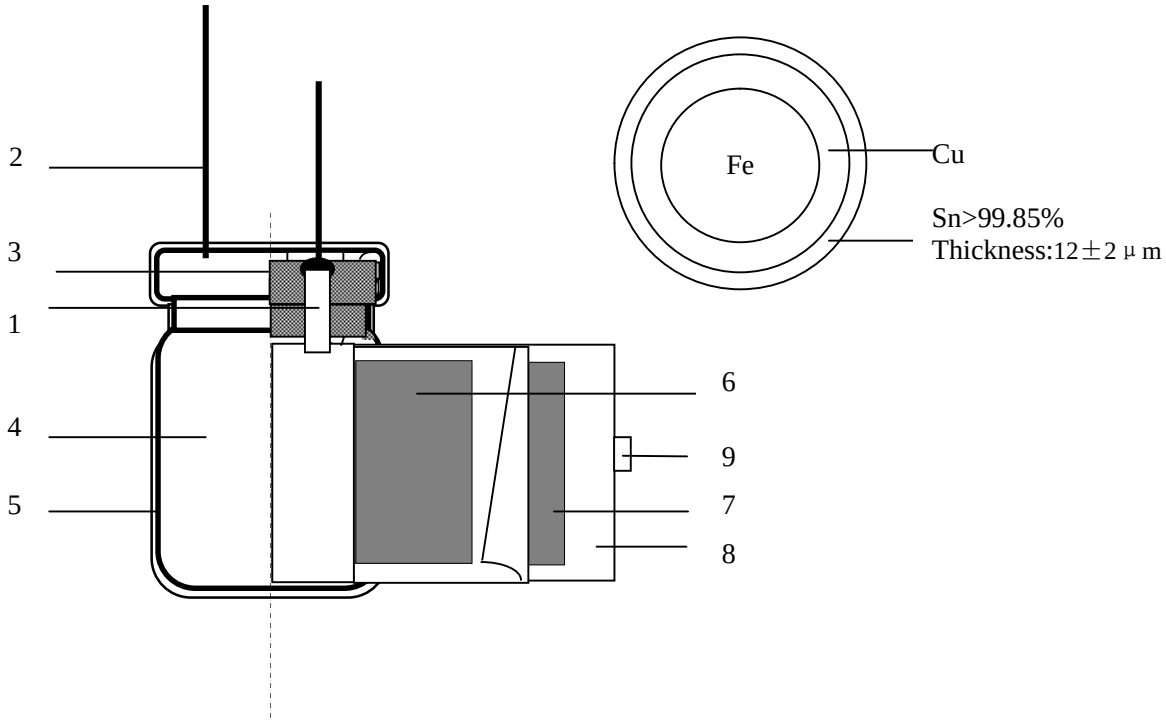

No	材 料 （Component）	材 质 （Materials）	供应商 （Vendor）
1	Al Wire	Aluminum 99.98%	Capxon / hongyang
2	CP Wire	Cu+Fe+Sn	Capxon / hongyang
3	Rubber	EPT or IIR	Lian Hua Xin / Qiang An
4	Sleeve	PET	Yun Lin / Moodeung
5	Case	Aluminum 98.5%	OAKLEY / Ao-xing
6	Anode Toil	Formed Aluminum 99.99% or 99.98%	CapXon / Zhan Chen / Haiyi
7	Cathode Toil	Etched Aluminum 99.7% 99.4%	Feilo
8	Separator	Manila+pulp,kraft	NKK / KAN / Xian He
9	Adhesive tape	Poly-propylene film(size>10x24)	XinF eiDie
	Electrolyte	Ethylene Glycol	CAPXON

PDF 檔案使用 "pdfFactory Pro" 試用版本建立 www.pdffactory.com

Part Number System

When placing and order for Aluminum Electrolytic Capacitors. Please observe following Catalog Part Number format that describes.

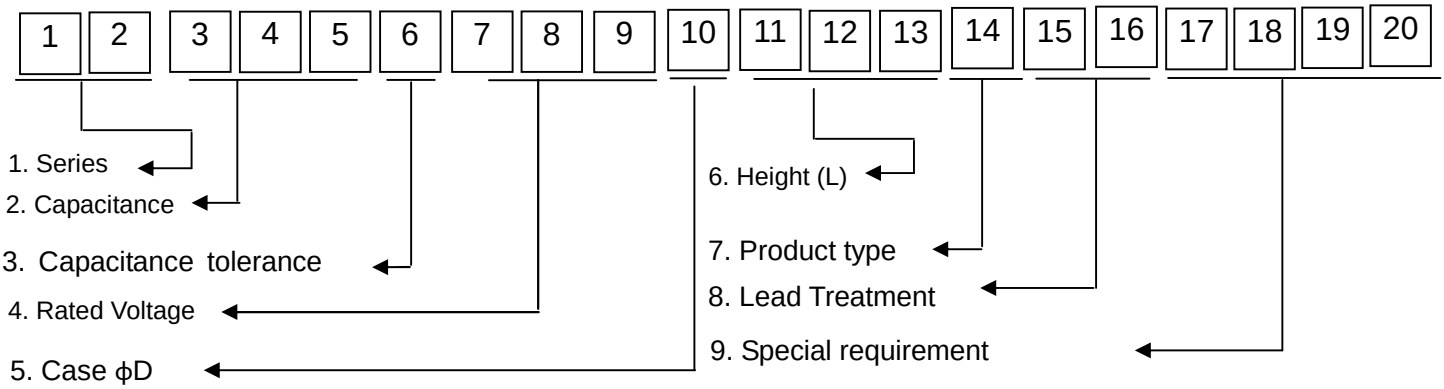

(1).Series

The series name.

(2).Capacitance

Capacitance is show in microfarad (μF)

Capacitance (μF)	0.1	0.47	1	4.7	10	100	1000	10000
Code	0R1	R47	010	4R7	100	101	102	103

(3).Capacitance tolerance

Tolerance%	±5	±10	±20	±30	-10to+30	-10to+50	-10to+20	-10to100	0to+20	-30to+0	±15
Code	H	K	M	N	Q	T	V	W	Z	U	S
Tolerance%	0to+30	0to+40	0to+50	-5to+20	-8to+5	+5to+20	0to-20	-15to+20	-25to+20	-50to+0	-5to+30
Code	Y	X	A	J	E	I	B	P	L	O	C

For tolerance other than these and specified capacitance tolerance, please specify the value on the order sheet.

(4).Voltage (W.V)

Voltage (W.V)	6.3	10	16	25	35	50	63	80	100	160	200	220	250	350	400	420	450	500
Code	6R3	010	016	025	035	050	063	080	100	160	200	220	250	350	400	420	450	500

(5).Case (ϕD: mm)

Diameter	3	4	5	6.3	7.3	8	10	12	13	16	18	20	22	25	30	35	40	42	45	51	63.5	76.2	89	14.5	12.5
Code	A	B	C	E	7	F	G	H	I	J	K	L	M	N	O	P	Q	U	V	R	S	T	X	Y	Z

(6). Height (L: mm)

Description	5	5.5	5.8	6.5	7	7.7	8	8.7	9	10	10.5	11	12.5	14	16	17	18
Code	050	055	058	065	070	077	080	087	9	100	105	110	125	140	160	170	180

Description	20	21	25	25.5	30	31.5	35	35.5	41	47	52	83	98	118	141	151
Code	200	210	250	255	300	315	350	355	410	470	520	830	980	A18	A41	A51

(7). Product type

Type	Without Lead Treatment	With Lead Treatment	Polymer
Code	A	E	P

PDF 檔案使用 "pdfFactory Pro" 試用版本建立 www.pdffactory.com

(8). Lead Treatment (Radial type)

Description	Taping (Ammo Package)	Taping (Reel Package)	Lead Cutting	Lead Forming Cutting	Lead Forming only	Lead Crimping & Forming	Lead Cutting & Kink	Kink	Bending & Cutting	Forming &Kink
Code	TA、TB、TC、TD、TE、TF、ETC.	RA、RB、RC、RD、RE、 Etc.	CA	CF	FA	KF	CK	KA	CR 、CL	EF

Remarks: The product of V- chip sticks a dish to process form is “TR”.

(9) Special & appearance requirement (the 17th, 18th, 19th, 20th code)

Code	Special		Code	Special		Code	request characteristic		Code	Special
A	Terminals of Snap-in		H	Height requirement		R	Ripple current		U	Package & label
B	Rubber		I	L.C.		S	Countermeasure			
C	Lead wire		K	Vent line		T	Temperature characteristic			
D	D.F.		L	Life		V	Vt, Electrolyte paper			
E	Electrolyte		N	Nude		M	Solder, technics, form, Case with stud			
F	Pitch		P	Sleeve, tray, print, PVC sleeve		Y	clip loop			
G	Fill glue		Q	Capacitance, CV, Break		Z	Impedance			

Remarks:

1. If it’s without lead treatment & special requirement, after the 14th code is blank.
2. If it’s with lead treatment & without require special requirement, the 17th, 18th, 19th, 20th code is blank.
3. If it’s without lead treatment, but with special requirement, the 15th, 16th code filled with 0.
4. If it’s without lead treatment, but with special requirement, also exceeds 4 kinds, keystone characteristic is 4 codes.
5. If it’s with lead treatment, but with 1 special requirement, only remark 17th code, latter three codes is blank.
6. If it’s with lead treatment, but with 1 special requirement, and it is different from former data, the 17th is 0, the 18th code is characteristic.

PDF 檔案使用 "pdfFactory Pro" 試用版本建立 www.pdffactory.com

Information

1. Maximum ripple current

1.1 Maximum RMS ripple current at +105°C , 100KHz.

1.2 When capacitors are operated at temperatures other than +105°C, and frequency other than 100KHz, the maximum RMS ripple currents must be multiplied by the factors shown in below table.

Multiplier for Ripple Current vs. Frequency:

CAP. (uF) \ Frequency(Hz)	50(60)	120	400	1K	10K	50～100K
CAP≦10	0.47	0.59	0.76	0.85	0.97	1.0
10<CAP≦100	0.52	0.65	0.80	0.89	0.97	1.0
100<CAP	0.58	0.72	0.84	0.90	0.98	1.0

Multiplier for Ripple Current vs. Temperature:

Temperature℃	45	60	70	85	105
Multiplier	2.10	1.90	1.65	1.40	1.00

* The valid life span does not prolong(Consult to use)

1.3 When frequency is different from specified condition shown as above, do not exceed the value obtained by multiplying the permissible maximum ripple current by the multiplier above. The ripple current verify methods according to JIS-C-5101-1(2010) No.: 4.23

☆ Note: 1) Ripple current corrected with working frequency

2) Check the generated heat of capacitor when ripple current is hard to measure in the circuit. Promoted temperature by self-generating heat should be within 5℃.

2.Working Voltage (WV)

Make sure that no excess voltage (that is, higher than the rated voltage) is applied to capacitor. Please pay attention so that the peak voltage, which is DC voltage, overlapped by ripple current, will not exceed the rated voltage.

3.Insulating

General types of aluminum electrolytic capacitors are covered with a vinyl sleeve or the like. And this Sleeve is used for marking. When the internal element or the container is needed to be insulated, capacitors specially designed for insulation requirement are recommended to be used.

4. Soldering

4.1 When soldering a PC board with various components, too high soldering temperature or too long dipping time may cause secondary shrinking of the sleeve and then the container unnecessarily exposed. The soldering must be done on the reverse of PC board.

4.2 Soldering may melt or break the sleeve when the sleeve is contacted with circuit boards. So the capacitors are recommended to be slightly apart from the circuit boards.

5.Vent

The capacitor (Φ≧10mm) is provided with a safety vent on the bottom of the container. The vent would rupture in the event of the unsafe usage or misusage and relieve the internal higher pressure.

6. High Altitude

The capacitors can withstand those transportation conditions that temperature may range from -55℃ to +105℃, and the altitude may reach 200,000 feet.

7. Cleaning agents:

If the capacitor is cleaned in halogenated agents for organic removing solder flux solvent, the agents may penetrate into the inside of capacitor, and may generate corrosion.

8. Environment-friendly policy

In the entire process of capacitor's production, including manufacture, packaging, storage and transportation, our company always comply with the related Environmental Protection Laws and Regulations of RoHS.

9. Mounting and Installation design according to EIAJ RCR-2367 standards.

PDF 檔案使用 "pdfFactory Pro" 試用版本建立 www.pdffactory.com

1. Performance

Test environment:

Methods	Temperature (℃)	Relative humidity (RH)	Atomospheric (Kpa)
①	15~35	25~75%	86~106
②	25±10	40~60%	86~106
③	20±1	63~67%	86~106

Remark:

①: Normal testing & the test results without doubt.

②: Normal testing & the test results with doubt.

③: Testing it in standard laboratory & the test results still with judgement.

1-1.Leakage current（L.C.）

〔Conditions〕

Rated voltage shall be applied to capacitors in series with a resistor of 1000±10Ω .
Then leakage current shall be measured at the end of a specified period after the capacitors reached the rated voltage across the terminals.

〔Criteria〕

I≦0.01CV or 3 (μA)　　{I: Leakage Current(μA); C: Capacitance (μF); V: Rated voltage (V)}
After 2 minutes whichever is greater measured with rated working voltage applied.

1-2.Capacitance（Cap.）

〔Conditions〕

Measuring frequency　　: 120Hz±20%
Measuring voltage　　: 0.5Vrms max. +1.5 to 2.0VDC
Measuring circuit　　: Series equivalent circuit

〔Criteria〕

Shall be within the specified capacitance tolerance.

1-3.Dissipation factor(tanδ）

〔Conditions〕

Measuring frequency　　: 120Hz±20%
Measuring voltage　　: 0.5Vrms max. +1.5 to 2.0VDC
Measuring circuit　　: Series equivalent circuit

〔Criteria〕

W.V.(V)	6.3	10	16	25	35	50
D.F.(%)max.	18	16	14	12	12	10

1-4.Terminal strength

(1) Pull strength

〔Conditions〕

The capacitor body shall be held. A force shall be gradually applied to the lead wire in the direction of the axis of the lead wire up to the specified pull force,and retained for 10±1 seconds.

Diameter of terminal (mm)	Pull force(N±10%)
0.35＜d≦0.5	5(0.51Kg)
0.5＜d≦0.8	10(1.02Kg)
0.8＜d≦1.25	20(2.04Kg)
SNAP-IN type terminal	40(4.08Kg)

〔Criteria〕

The lead wire shall neither loosen nor break away.

PDF 檔案使用 "pdfFactory Pro" 試用版本建立 www.pdffactory.com

(2) Lead bending strength

〔Conditions〕

The capacitor shall be held so that the normal axis of the lead wire can be in a vertical position.
A weight equivalent to the specified load shall be hung on the end of the lead wire.
The capacitor body shall be inclined through 90°and returned to its normal position within
2 to 3 seconds. The consecutive bend shall then be in the opposite direction in the same manner.

Diameter of terminal (mm)	Pull force(N±10%)	Bends
0.35＜d≤0.5	2.5N(0.26 Kg)	2
0.5＜d≤0.8	5 N(0.51 Kg)	2
0.8＜d≤1.25	10N(1.02 Kg)	2
LUG type terminal	20N(2.04Kg)	2

SNAP-IN type terminals do not bending experiments, LUG terminal do bending test, bending angle of 45 degree centigrade.

〔Criteria〕

The lead wire shall neither loosen nor break away.

1-5.Soldering Heat Resistance Test

〔Conditions〕

Type of solder	: Sn-3Ag-0.5Cu
Flux	: Ethanol solution(25 wt.% rosin)
Solder temperature/immersion time	: 260(0~+3)℃ for 10±1 seconds
Solder iron temperature/time	: 400±10℃ for 5 to 6 seconds,3 times
Depth of immersion	: Up to 1.5-2.0mm from the root of the lead wire covered with a thermal shield plate
Speed of immersion	: 25±2.5mm/sec.

〔Criteria〕

Appearance	: No significant damage, legible marking, and no electrolyte leakage.
Capacitance change	: Within ±5% of initial value.
Tan δ	: Not more than the specified value
Leakage current	: Not more than the specified value

1-6. Solderability Test

〔Conditions〕

Type of solder	: Sn-3Ag-0.5Cu
Flux	: Ethanol solution (25 wt.% rosin)
Solder temperature	: 245±5℃
Speed of immersion	: 25±2.5mm/sec.
Depth of immersion	: Up to 1.5-2.0mm from the root of the lead wire covered with a thermal shield plate
Dipping time	: 2±0.5 seconds

〔Criteria〕

At least 95% of circumferential surface of the dipped portion of terminal shall be covered with new solder.

PDF 檔案使用 "pdfFactory Pro" 試用版本建立 www.pdffactory.com

1-7.Temperature cycles

〔Conditions〕

Referring to JIS-C- 5101-1 (2010) No:1-10, the capacitor shall be subjected in turn to the procedures specified below:

Step	Temperature	Time (min.)	Cycles
1	Rated low working temperature (-55±3℃)	30±3	1 to 4 = 1cycle, total 10 cycles.
2	25±5℃	3	
3	Rated high working temperature (105±2℃)	30±3	
4	25±5℃	3	

Remark: If the highest working temp. over than 125℃, the using temp. tolerance is ±5℃.

〔Criteria〕

Capacitance change	: Within ±5% of initial value.
Tan δ	: Not more than the specified value
Leakage current	: Not more than the specified value
Appearance	: No leakage and damaged.

1-8.Vibration

〔Conditions〕

Vibration frequency range	: 2 to 3000Hz
Amplitude or Acceleration	: 0.75 mm (Half amplitude)or 98m/s^2 (Whichever is less severe)
The vibration amplitude of P-P value	: 0mm~25mm
Test frequency	: 10-55-10Hz (Approximately 1 minute)
Direction and duration of vibration	: 3 orthogonal directions mutually each for 2h.(Total 6hrs)

〔Criteria〕

Capacitance change	: Within ±5% of initial value.
Tan δ	: Not more than the specified value
Leakage current	: Not more than the specified value
Appearance	: No leakage and damaged.

1-9.Damp Heat Steady State Test

〔Conditions〕

Test temperature	: +40±2℃
Relative humidity	: 90% to 95%RH
Test time	: 250 hours

After completion of test, the capacitors shall expose in the atmospheric condition for 16 hours, and then measurements shall be taken.

〔Criteria〕

Capacitance change	: Within ±20% of initial value.
Tan δ	: Not more than 120% of the specified value
Leakage current	: Not more than the specified value
Appearance	: No leakage and damaged.

PDF 檔案使用 "pdfFactory Pro" 試用版本建立 www.pdffactory.com

1-10.Endurance

〔Conditions〕

Capacitors shall be placed in an oven with application of the rated D.C voltage

Ambient temperature	: 105±2℃
Specified test time	: 2000 hours

〔Criteria〕

Capacitance change	: Within ±20% of initial value.
Tan δ	: Not more than 200% of the specified value
Leakage current	: Not more than the specified value
Appearance	: No leakage and damaged.

1-11.Surge voltage test

〔Conditions〕

Test temperature	: +15 to +35℃
Series protective resistor	: 1000±10Ω
Charge and discharge time	: Charge period is 30s, followed by a discharge period of 5.5 min.
Test cycle	: 1000 cycles.
Rated voltage ≦315V	:Surge voltage shall be 1.15 times the rated voltage
Rated voltage > 315V	:Surge voltage shall be 1.1 times the rated voltage

〔Criteria〕

Capacitance change	: Within ±15% of initial value.
Tan δ	: Not more than the specified value
Leakage current	: Not more than the specified value
Appearance	: No leakage and damaged.

1-12.High Temperature Storage

〔Conditions〕

The following specifications shall be satisfied when the capacitors are restored to 20℃ after exposing them for 1000 hours at 105±2℃ without an applied voltage. Before the measurements, the capacitor shall be preconditioned by applying voltage according to Item 4.1 of JIS C 5101-4.

〔Criteria〕

Capacitance change	: Within ±20% of initial value.
Tan δ	: Not more than 200% of the specified value
Leakage current	: Not more than the specified value
Appearance	: No leakage and damaged.

1-13.High and Low Temperature characteristics

〔Conditions〕

Step	Temperature [℃]	Time
1	+20±2	/
2	-55±3	2h
3	+20±2	15±2 min.
4	+105±2	2h
5	+20±2	15±2 min.

PDF 檔案使用 "pdfFactory Pro" 試用版本建立 www.pdffactory.com

〔Criteria〕

Step 2： Impedance ratio shall not exceed the values shown in Table attached.

[120Hz]

Rated Voltage(V)	6.3	10	16	25	35	50
Z-25℃/Z+20℃	2	2	2	2	2	2
Z-55℃/Z+20℃	3	3	3	3	3	3

Step 4. Capacitance change : Within ±30% of initial value.

Tan δ : Not more than the specified value.

Leakage current : Shall not more than 800% of initial specified value.

2. Reference standard

SY series is applicable to general-purpose grade capacitors of JIS-C-5101-1(2010)

The other test conditions shall comply with JIS-C-5101-4(2010).

3. Marking

The following items shall be marked on each capacitor. All marking shall be legible and permanent.

（Example）

(1) CapXon: Manufacturer: trademark

(2) 16V: Rated voltage

(3) 100μF: Nominal capacitance

(4) —)— : (-)Polarity (Cathode indicate)

(5) 105℃: Maximum operating temperature.

(6) SY: Series

(7) P1018: Production date code

（P: PET Sleeve; 10: year 2010; 18: the 18 week）

(8) VENT: Safety vent (≧6.3X11mm、8X7mm have mark of vent)

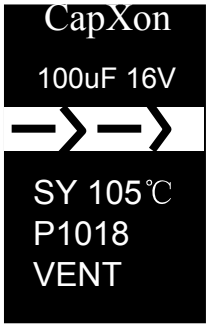

PDF 檔案使用 "pdfFactory Pro" 試用版本建立 www.pdffactory.com