Leadtrend

Preliminary Datasheet
LD5535E1

10/05/2017

Green-Mode PWM Controller with Frequency Swapping and Integrated Protections

REV: P01

The values contained in this preliminary datasheet are for reference only and not for approval. Users should verify for a current and complete document before placing orders.

Confidential for Qisda only

General Description

The LD5535E1 is built-in with several functions, protection and EMI-improved solution in a tiny package. It takes less components counts or circuit space, especially ideal for those total solutions of low cost.

The implemented functions include low startup current, green-mode power-saving operation, leading-edge blanking of the current sensing and internal slope compensation. It also features more protections like OLP (Over Load Protection)、OTP (Over Temperature Protection) and OVP (Over Voltage Protection) to prevent circuit damage occurred under abnormal conditions.

Furthermore, the frequency swapping function is to reduce the noise level and thus helps the power circuit designers to easily deal with the EMI filter design by spending minimum amount of component cost and developing time.

Features

- High-Voltage CMOS Process with Excellent ESD protection
- Very Low Startup Current (<3μA)
- Current Mode Control
- Green Mode Control
- UVLO (Under Voltage Lockout)
- LEB (Leading-Edge Blanking) on CS Pin
- Internal Frequency Swapping, Slop Compensation
- OVP (Over Voltage Protection) on VCC and CS Pin
- OTP (Over Temperature Protection) through a NTC
- OLP (Over Load Protection)
- OSCP (Output Short Circuit Protection)
- 250mA/-500mA Driving Capability

Applications

- Switching AC/DC Adaptor and Battery Charger
- Open Frame Switching Power Supply

Typical Application

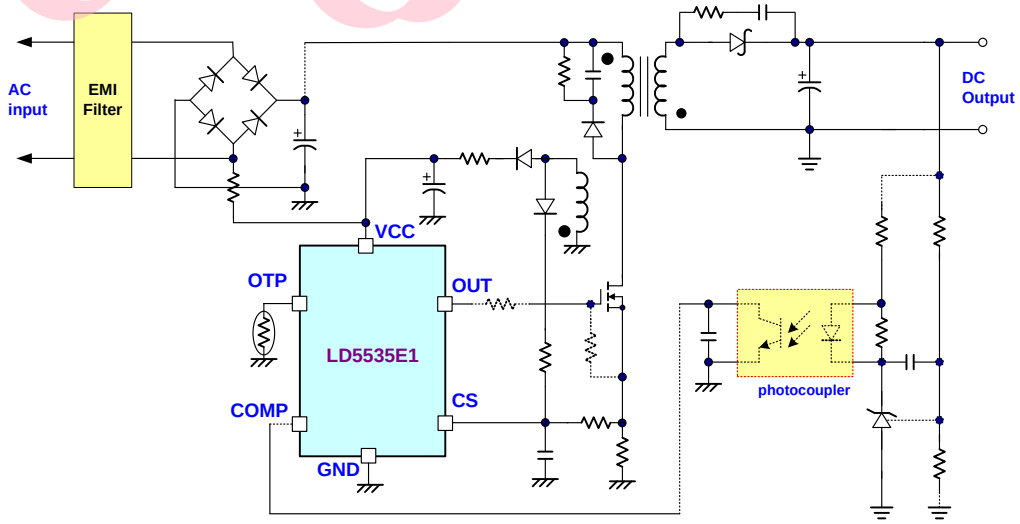

Pin Configuration

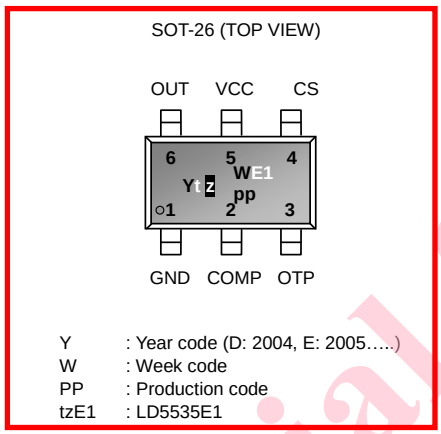

Ordering Information

Part number	Package	Top Mark	Shipping
LD5535E1 GL	SOT-26	Yt z/ WE1	3000 / tape & reel

The LD5535E1 is ROHS compliant / Green Packaged

Protection Mode

Switching Freq.	OLP	VCC OVP	CS OVP	OSCP	SDSP	OTP Pin	Int. OTP
65kHz	Auto recovery	Auto recovery	Auto recovery	Auto recovery	Auto recovery / 4 Cycle	Auto recovery	Auto recovery

Pin Descriptions

SOT-26	NAME	FUNCTION
1	GND	Ground
2	COMP	Voltage feedback pin (same as the COMP pin in UC384X). Connect a photo-coupler to close the control loop and achieve the regulation.
3	OTP	Pull this pin below 0.95V to shut down the controller into latch mode until the AC resumes power-on. Connecting this pin to ground with NTC will achieve OTP protection. Let this pin float or connect a 100kΩ resistor to disable the latch protection.
4	CS	Current sense pin, connect it to sense the MOSFET current.
5	VCC	Supply voltage pin
6	OUT	Gate drive output to drive the external MOSFET

Confidential for Qisda only

Block Diagram

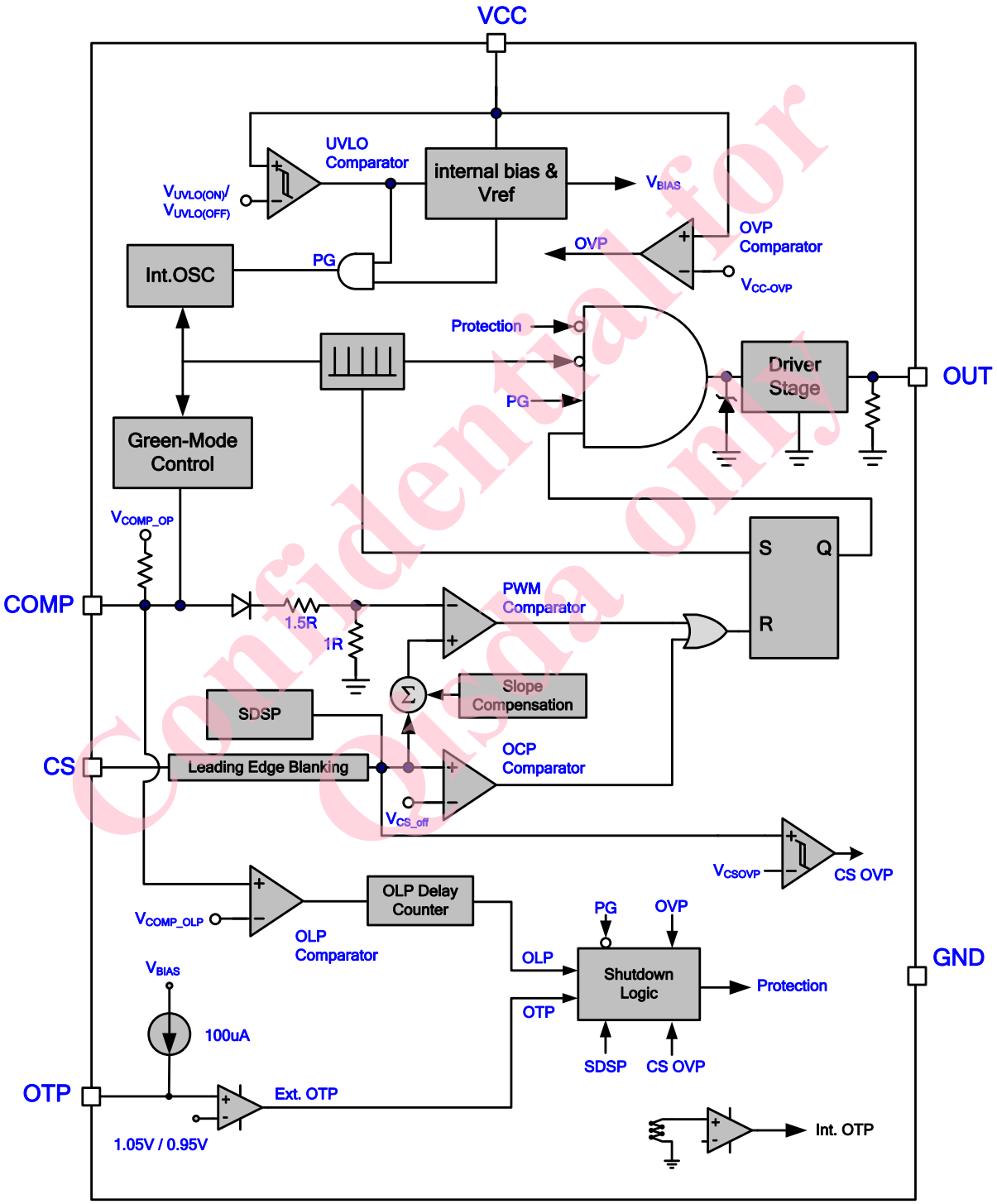

Confidential for Osda only

Absolute Maximum Ratings

Supply Voltage VCC	-0.3V ~ 30V
COMP, CS, OTP	-0.3V ~ 6V
OUT	-0.3V ~ VCC+0.3V
Maximum Junction Temperature	150°C
Storage Temperature Range	-65°C ~ 150°C
Package Thermal Resistance (SOT-26, θ_{JA})	200°C/W
Power Dissipation (SOT-26, at Ambient Temperature = 85°C)	200mW
Lead temperature (Soldering, 10sec)	260°C
ESD Voltage Protection, Human Body Model	2.5 KV
ESD Voltage Protection, Machine Model	250 V

Caution:

Stress exceeding Maximum Ratings may damage the device. Maximum Ratings are stress ratings only. Functional operation above the Recommended Operating Conditions is not implied. Extended exposure to stress above Recommended Operating Conditions may affect device reliability

Recommended Operating Conditions

Item	Min.	Max.	Unit
Operating Junction Temperature	-40	125	°C
Supply VCC Voltage	8.5	26.5	V
VCC Capacitor	3.3	10	μF
Start-up resistor Value (AC Side, Half Wave)	540K	2.2M	Ω
COMP Pin Capacitor	1	10	nF
CS Pin Capacitor Value	47	390	pF

Note:

1. It's essential to connect VCC pin with a SMD ceramic capacitor (0.1μF ~ 0.47μF) to filter out the undesired switching noise for stable operation. This capacitor should be placed close to IC pin as possible
2. It's also essential to connect a capacitor to COMP to filter out the undesired switching noise for stable operation.
3. The small signal components should be placed close to IC pin as possible.

Confidential for Qisda only

Electrical Characteristics

(T_A = +25°C unless otherwise stated, VCC=15.0V)

PARAMETER	CONDITIONS	SYMBOL	MIN	TYP	MAX	UNITS
Supply Voltage (VCC Pin)						
Startup Current	VCC < UVLO(ON)	I_{CC_ST}			1	μA
Operating Current (with 1nF load on OUT Pin)	V_{COMP}=0V, OUT=1nF	I_{CC_OP1}		0.285		mA
	V_{COMP}=1.7V, OUT=1nF	I_{CC_OP2}		1.9		mA
	Auto current protection	I_{CC_OPA1}		0.6		mA
UVLO(OFF)	OUT OFF	VCC_{OFF}	6.5	7.5	8.5	V
UVLO(ON)		VCC_{ON}	15	16	17	V
VCC OVP Level		VCC_{OVP}	27	28	29	V
VCC OVP de-bounce time		T_{VCC_OVP}		8		Cycle
Voltage Feedback (Comp Pin)						
Short Circuit Current	V_{COMP}=0V	I_{COMP}		0.11		mA
Open Loop Voltage		V_{COMP_OPEN}		3.15		V
Zero Duty Threshold V_{COMP}		V_{ZDC}		0.5		V
Zero Duty Hysteresis		V_{ZDCH}		100		mV
Current Sensing (CS pin)						
Maximum Input Voltage (V_{CS_OFF})		V_{CS_LIMIT}		0.82		V
Maximum Input Voltage (V_{CS_MIN})	For High Line	V_{CS_MIN}	0.59	0.69	0.79	V
Leading Edge Blanking Time		T_{LEB}		220		ns
Internal Slope Compensation	0% to D_{MAX}. (Linearly increase) *	V_{SLP_L}		330		mV
Input impedance	*	Z_{CS}	1			MΩ
Delay to Output	*	T_{PD}		100		ns
Gate Drive Output (OUT Pin)						
Output Low Level	VCC =15V, Io=20mA *	V_{OL}			1	V
Output High Level	VCC =15V, Io=20mA	V_{OH}	9		14	V
Rising Time	VCC =15V C_L=1000pF	T_r		200		ns
Falling Time	VCC =15V C_L =1000pF	T_f		30		ns
Output High Clamp Level	VCC =18V	V_{O_CLAMP}	10.5	11.5	12.5	V

Confidential for Qisda only

PARAMETER	CONDITIONS	SYMBOL	MIN	TYP	MAX	UNITS
Oscillator for Switching Frequency						
CCM Frequency		F_{CCM}	60	65	70	kHz
Frequency Swapping	*	F_{SW_MOD}		±8		%
Green Mode Frequency		F_{SW_GREEN}	21	24	27	kHz
Temp. Stability	*	F_{SW_TS}		3	5	%
Voltage Stability	VCC =9V~24V *	F_{SW_VS}			1	%
Maximum Duty	*	D_{MAX}		81		%
Soft Start						
Soft Start Time	V_{CS_OFF} from 0.2V to 0.5V *	T_{SS}		7		ms
OLP (Over Load Protection)						
OLP Trip Level		V_{OLP}		2.8		V
OLP delay time	After soft-start	T_{D_OLP}		88		ms
Over Voltage Protection (CS Pin)						
CS OVP Trip Current Level		V_{CSOVP}		0.31		V
CS OVP De-bounce Cycle	*	T_{D_CSOVP}		8		Cycle
OTP Pin Protection (OTP Pin)						
OTP Pin Source Current		I_{OTP}	90	100	110	μA
OTP Turn-On Trip Level		V_{OTP_ON}		1.05		V
OTP Turn-Off Trip Level		V_{OTP_OFF}		0.95		V
OTP pin de-bounce time	V_{COMP} > 2V	T_{D_OTP}		550		μs
Internal OTP Protection						
OTP Level	*	T_{UP_OTP}		140		℃
OTP Hysteresis	*	T_{INOTP_HYS}		30		℃
SDSP (Secondary Diode Short Protection)						
SDSP CS Pin Level	Secondary diode short	V_{CS_SDSP}		1.2		V
De-bounce Cycle	*	T_{D_SDSP}		4		Cycle

*: Guaranteed by design.

Confidential for Qisda only

Application Information

Operation Overview

The LD5535E1 meets the green-power requirement and is intended for the use in those modern switching power suppliers and adaptors which demand higher power efficiency and power-saving. It integrated more functions to reduce the external components counts and the size. Its major features are described as below.

Under Voltage Lockout (UVLO)

An UVLO comparator is implemented in it to detect the voltage on the VCC pin. It would assure the supply voltage enough to turn on the LD5535E1 PWM controller and further to drive the power MOSFET. As shown in Fig. 1, a hysteresis is built in to prevent the shutdown from the voltage dip during startup.

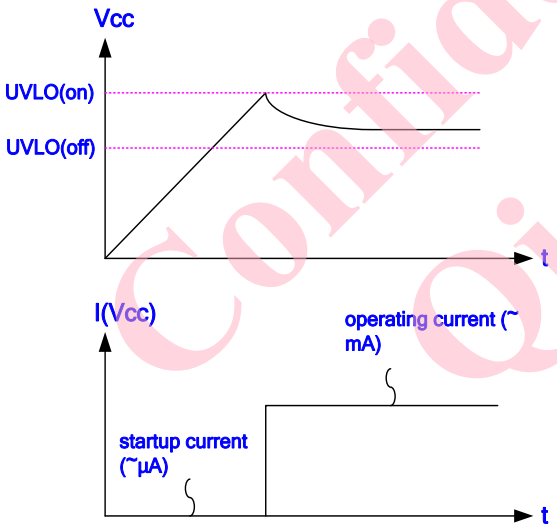

Fig. 1

Startup Current and Startup Circuit

The typical startup circuit to generate VCC of the LD5535E1 is shown in Fig. 2. During the startup transient, the VCC is below UVLO threshold. Before it has sufficient voltage to develop OUT pulse to drive the power MOSFET, R1 will provide the startup current to charge the capacitor C1. Once VCC obtain enough voltage to turn on the LD5535E1 and further to deliver the gate drive signal, it will enable the auxiliary winding of the transformer to provide supply current. Lower startup current requirement on the PWM controller will help to increase the value of R1 and then reduce the power consumption on R1. By using CMOS process and the special circuit design, the maximum startup current for LD5535E1 is only 3μA.

If a higher resistance value of the R1 is chosen, it will usually take more time to start up. To carefully select the value of R1 and C1 will optimize the power consumption and startup time.

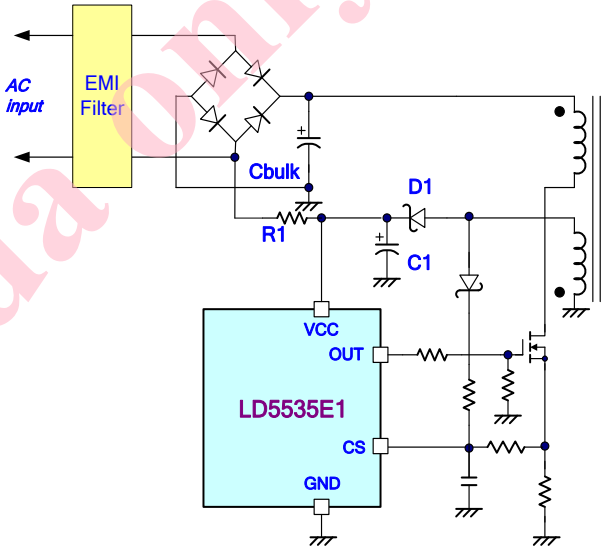

Fig. 2

Current Sensing and Leading-Edge Blanking

The typical current mode of PWM controller feedbacks both current signal and voltage signal to close the control loop and achieve regulation. The LD5535E1 detect the primary MOSFET current from the CS pin, which is not only for the peak current mode control but also for the pulse-by-pulse current limit.

Confidential for Qisda only

In general, the power converter will provide more current when input voltage alters to high due to the signal propagation delay. This can be compensated through LD5535E1. It's controlled by varying the current limit with the duty cycles in corresponding to V_{CS_OFF}. As shown in Fig. 3, V_{CS_OFF} (corresponding to current limit) is in direct proportion to duty ratio in a certain segment and is fixed at high or low if duty ratio is respectively over or below threshold values. As a result, the current limit will be lowered at high-line inputs. This compensation control mechanism is developed with patents pending by Leadtrend Technology.

The maximum voltage threshold of the current sensing pin is set at 0.85V for low-line input. Thus the MOSFET peak current can be calculated as:

$$I_{PEAK\ (MAX)} = \frac{0.85V}{R_{CS}}$$

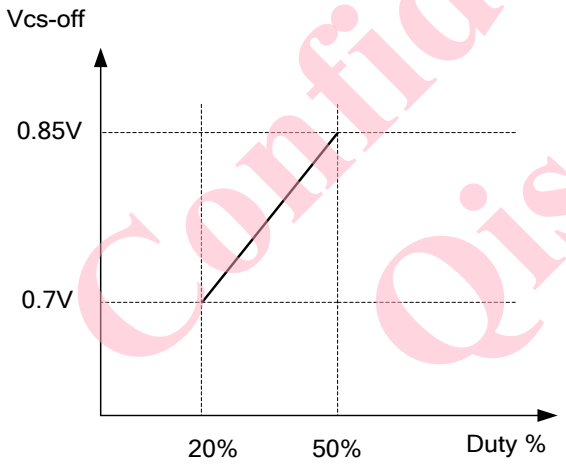

Fig. 3

A 200ns leading-edge blanking (LEB) time is included in the input of CS pin to prevent the false-trigger from the current spike. In the low power application, if the total pulse width of the turn-on spike is less than 200ns and the negative spike on the CS pin doesn't exceed -0.3V, it could remote the R-C filter (as shown in the Fig. 4).

However, the total pulse width of the turn-on spike is decided by the output power, circuit design and PCB layout. It is strongly recommended to adopt a smaller R-C filter (as shown in Fig. 5) for higher power application to avoid the CS pin being damaged by the negative turn-on spike.

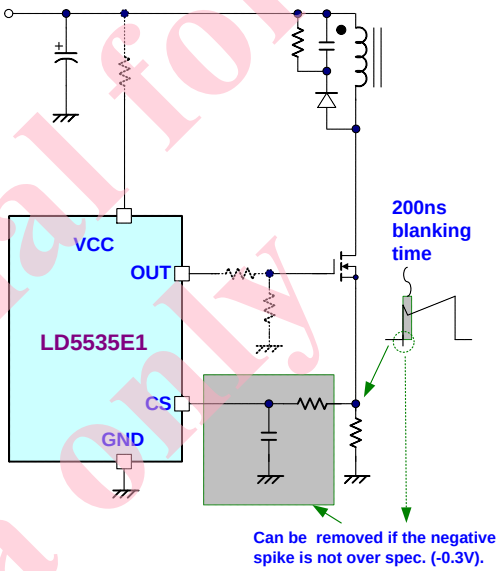

Fig. 4

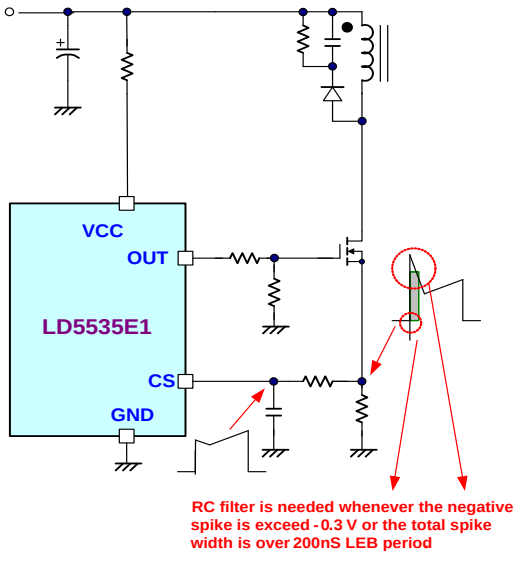

Fig. 5

Confidential for Qisda only

Output Stage and Maximum Duty-Cycle

An output stage of a CMOS buffer, with typical 250/-500mA driving capability, is incorporated to drive a power MOSFET directly. And the maximum duty-cycle of LD5535E1 is limited to 81% to avoid the transformer saturation.

Voltage Feedback Loop

The voltage feedback signal is provided from the TL431 at the secondary side through the photo-coupler to the COMP pin of the LD5535E1. Similar to UC3842, the LD5535E1 would carry a diode voltage offset at the stage to feed the voltage divider at the ratio of RA and RB, that is,

$$V_{-(PWM\ COMPARATOR)} = \frac{RB}{RA+RB} \times V_{COMP}$$

A pull-high resistor is embedded internally and can be eliminated externally.

Oscillator and Switching Frequency

The LD5535E1 is implemented with frequency swapping function which helps the power supply designers to both optimize EMI performance and lower system cost. The switching frequency substantially centers at 65kHz, and swap between a range of ±5.2kHz.

Green-Mode Operation

By using the green-mode control, the switching frequency can be reduced under the light load condition. This feature helps to improve the efficiency in light load conditions. The green-mode control is Leadtrend Technology's own property. Fig. 6 shows the characteristics of the switching frequency vs. the COMP pin voltage (V_{COMP}).

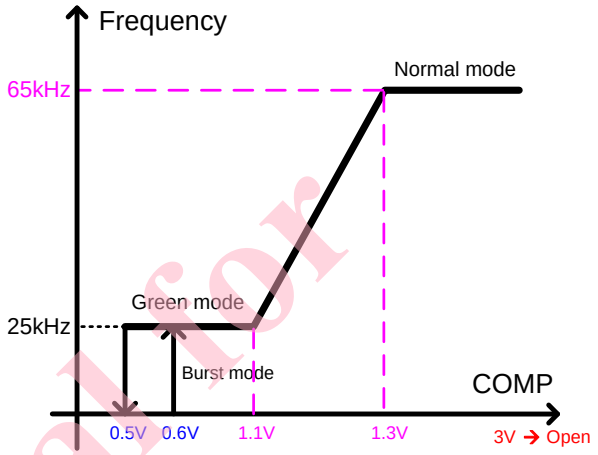

Fig. 6

On/Off Control

The LD5535E1 can be turned off by pulling COMP pin lower than 0.5V. The gate output pin of the LD5535E1 will be disabled immediately under such condition. The off-mode can be released when the pull-low signal is removed.

Internal Slope Compensation

In the conventional applications, the problem of the stability is a critical issue for current mode controlling, when it operates over 50% duty-cycle. As UC384X, It takes slope compensation from injecting the ramp signal of the RT/CT pin through a coupling capacitor. It therefore requires no extra design for the LD5535E1 since it has integrated it already.

Over Load Protection (OLP) – Auto Recovery

To protect the circuit from damage in over-load condition and short or open-loop condition, the LD5535E1 is implemented with smart OLP function. It also features auto recovery function; see Fig. 7 for the waveform. In case of fault condition, the feedback system will force the voltage loop toward the saturation and then pull the

Confidential for Qisda only

voltage high on COMP pin (V_{COMP}). When the V_{COMP} ramps up to the OLP threshold of 2.8V and continues over OLP delay time, the protection will be activated and then turn off the gate output to stop the switching of power circuit.

With the protection mechanism, the average input power will be minimized to remain the component temperature and stress within the safe operating area.

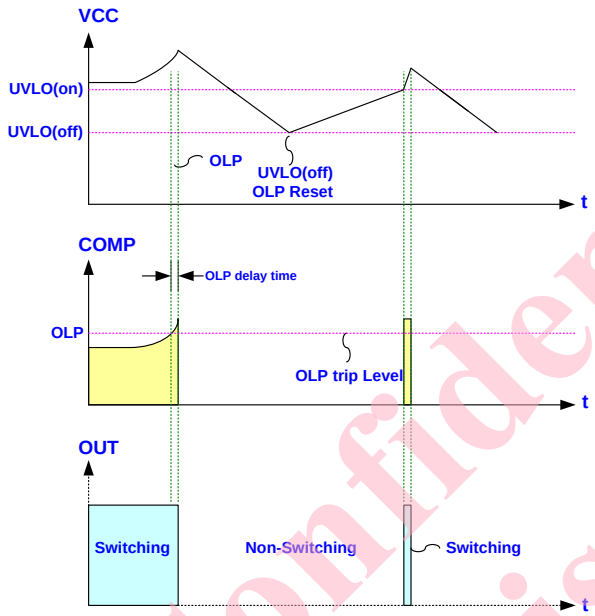

Fig. 7

Over Voltage Protection (OVP) on VCC Pin – Auto Recovery

The V_{GS} ratings of the nowadays power MOSFETs are often limited up to max. 28V. To prevent the V_{GS} from the fault condition, LD5535E1 is implemented with an OVP function on VCC. Whenever the VCC voltage is higher than the OVP threshold voltage, the output gate drive circuit will be shutdown simultaneously thus to stop the switching of the power MOSFET until the next UVLO(ON).

The VCC OVP function in LD5535E1 is an auto-recovery type protection. The Fig. 8 shows its operation.

On the other hand, if the OVP condition is removed, the VCC level will get back to normal level and the output will automatically return to the normal operation.

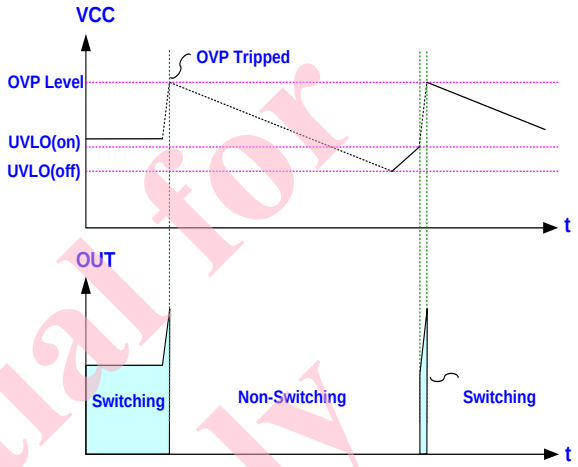

Fig. 8

Output Short Circuit Protection (OSCP) – Auto Recovery

The OSCP function can prevent the damage from output short circuit. Once the output is shorted, Vout and VCC drop immediately, which always reflects the auxiliary winding during the gate off region. According to the close loop control, COMP voltage will pull high in the meanwhile. If the V_{COMP} pulls higher than 2.8V over 15ms and VCC drops below 9.6V. At this time, the OSCP protection will be triggered and turn off the gate driving.

Output Over Voltage Protection (CS OVP) on CS Pin – Auto Recovery

An output overvoltage protection is implemented in the LD5535E1, as shown in Fig. 9 and 10. It senses the auxiliary voltage via the divided resistors. The auxiliary winding voltage is reflected from secondary winding and therefore the flat voltage on the CS/OVP pin is proportional to the output voltage. LD5535E1 can sample this flat voltage level after a delay time to perform output over voltage protection. This delay time is used to ignore

Confidential for Qisda only

the voltage ringing from leakage inductance of PWM transformer. The sampling voltage level is compared with internal threshold voltage 0.3V. If the sampling voltage exceeds the OVP trip level, an internal counter starts counting subsequent OVP events. The counter has been added to prevent incorrect OVP detection which might occur during ESD or lightning events. However, when typically 8 cycles of subsequent OVP events are detected, the OVP circuit switches the power MOSFET off. As the protection is latch, the converter restarts after the AC is plug out and in.

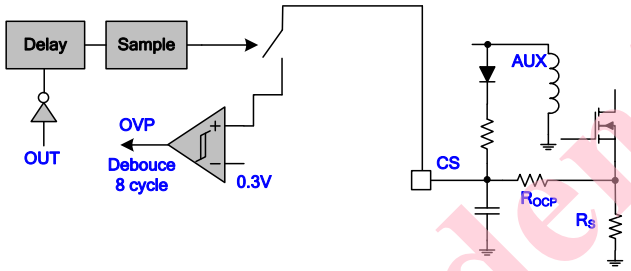

Fig. 9

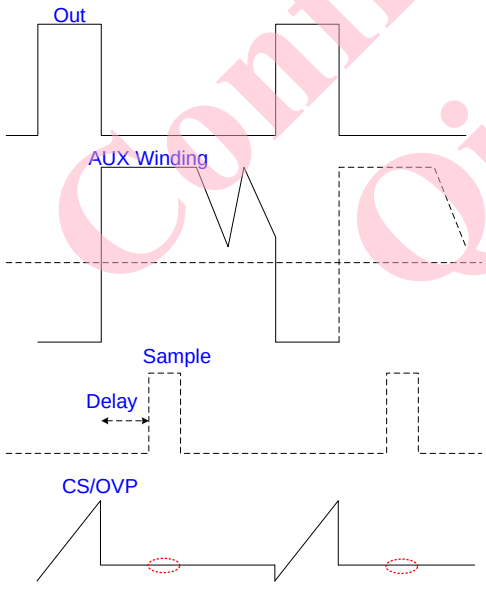

Fig. 10

OTP Pin – Auto Recovery

The OTP circuit is implemented to sense whether there is any hot-spot of power circuit like power MOSFET or output rectifier. Once an over-temperature condition is detected, the OTP is enabled to shut down the controller to protect the controller. Typically, a NTC is recommended to connect with OTP pin. The NTC resistance will decrease as the device or ambient in high temperature. The relationship is as below.

$$V_{OTP} = 100\mu A \cdot R_{NTC}$$

When the V_{OTP} is lower than the defined voltage threshold (typ. 0.95V), the LD5535E1 is going to shut down gate output. Restarting LD5535E1 successfully has to cool down the circuit so that NTC resistance will increase and raise V_{OTP} up above 1.05V.

Secondary Diode Short Protection (SDSP) – Auto Recovery

The method that the LD5535E1 judges the logic of SDSP is described briefly as follows. When VCS is higher than 1.2V, it will reduce the frequency first, even the Ton < LEB+T_{PD}. When the count is up to 4 times, its gate will be turned-off, shown as Fig. 11.

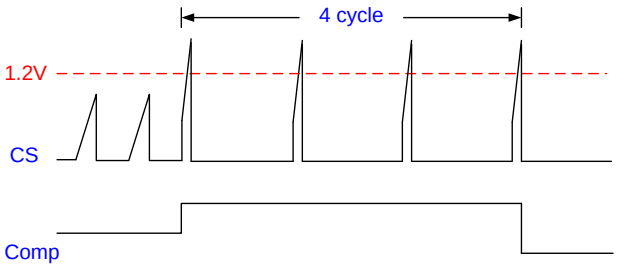

Fig. 11

Confidential for Qisda only

Fault Protection

There are several critical protections integrated in the LD5535E1 to prevent from damage to the power supply. Those damages usually come from open or short conditions on the pins of LD5535E1.

In case under such conditions listed below, the gate output will turn off immediately to protect the power circuit.

1. CS pin floating
2. COMP pin floating

Confidential for Qisda only

Package Information

SOT-26

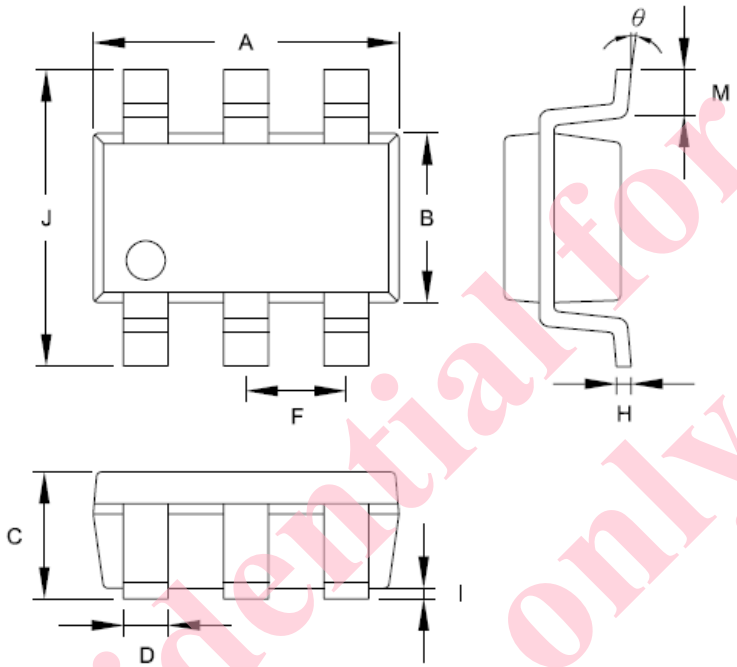

Symbol	Dimension in Millimeters		Dimensions in Inches	
	Min	Max	Min	Max
A	2.692	3.099	0.106	0.122
B	1.397	1.803	0.055	0.071
C	-------	1.450	-------	0.057
D	0.300	0.500	0.012	0.020
F	0.95 TYP		0.037 TYP	
H	0.080	0.254	0.003	0.010
I	0.050	0.150	0.002	0.006
J	2.600	3.000	0.102	0.118
M	0.300	0.600	0.012	0.024
θ	0°	10°	0°	10°

Confidential for Qisda only

Important Notice

Leadtrend Technology Corp. reserves the right to make changes or corrections to its products at any time without notice. Customers should verify the datasheets are current and complete before placing order.

Revision History

REV.	Date	Change Notice
P00	08/30/2017	Original Specification
P01	10/05/2017	Add the maximum and minimum values of the electrical characteristics form.

Confidential for Qisda only