WALTER ELECTRONIC

承認書
Approval Sheet

■ 客戶/Customer：

Qisda

■ 日期/Date：

Nov 30, 2020

■ 產品型號/Type Number：

2010 T2A 250V

■ 產品描述/Type Description：

Subminiature Fuses
Size: 8.5x8.5x4 mm (Square),Time-Lag Type
With

■ 特殊需求/Customer Request：

編帶

客戶確認
Customer Confirmation

客戶/Part No:

2F.12001.7C1

客戶簽章/Signature

蘇州工廠 / Suzhou Factory
蘇州華德電子有限公司/Suzhou Walter Electronic Co., Ltd
江蘇省蘇州市吳江區汾湖高新技術產業開發區新黎路99號
No.99, Xinli Road, Fenhu Hi-Tech Industrial Development Zone, Wujiang District, Suzhou, Jiangsu, China
Tel: 86-512-63271188
Fax: 86-512-63271188

台北營運所 / Taipei Office
10449 台北市中山區民權西路48號9樓
9F., No.48, Minquan W. Rd., Zhongshan Dist., Taipei 10449, Taiwan
Tel: 886-2-25637770
Fax: 886-2-25637701

www.walterfuse.com
walter@walterfuse.com

1. 適用範圍 / SCOPE

2010 系列保險絲，適用於一般電子設備。

2010 series Fuse, used in electronic equipment.

2. 產品型號 / TYPE

例「example」：



① 系列號/Series Number
② 延時性T/Time-Lag Type
③ 額定電流/Rated Current
④ 額定電壓/Rated Voltage
⑤ 認證符號/Approved Symbol

3. 額定電流和額定電壓/ RATED CURRENT AND RATED VOLTAGE

額定電流 / Rated Current:

100mA~10A

額定電壓 / Rated Voltage :
250V AC

4. 標示 / MARKING

保險絲上需有下列標示 / The fuses shall have the following marking:

①製造工廠及品名的標識 / Manufacture's Logo and product name: 2010

②電氣特性 / Electrical Characteristic: T (延時性的保險絲符號 symbol for Time-Lag)

③額定電流 / Rated Current (A):___A 或___mA

④額定電壓 / Rated Voltage (V): 250V

⑤認證符號 / Approval Marks:

100mA~800mA :

1A~6.3A :

8A~10A :

5. 外觀及形狀 / APPEARANCES AND CONFIGURATION

5-1 外觀不應有顯著的汙點、鐵銹或裂紋; 標示應該容易辨識。
There shall not be any remarkable stain, rust or crack on the appearances; marking shall be easily legible.

5-2 形狀：帶直線引腳的超小型保險絲。
Configuration：Radial leaded Sub-Miniature Fuse.

6. 工程圖和結構 / OUTLINE DRAWING AND STRUCTURE

6-1 工程圖 (單位元 : mm) / Outline Drawing and Dimensions (Unit: mm)

< 編帶包裝 >

< Taping >

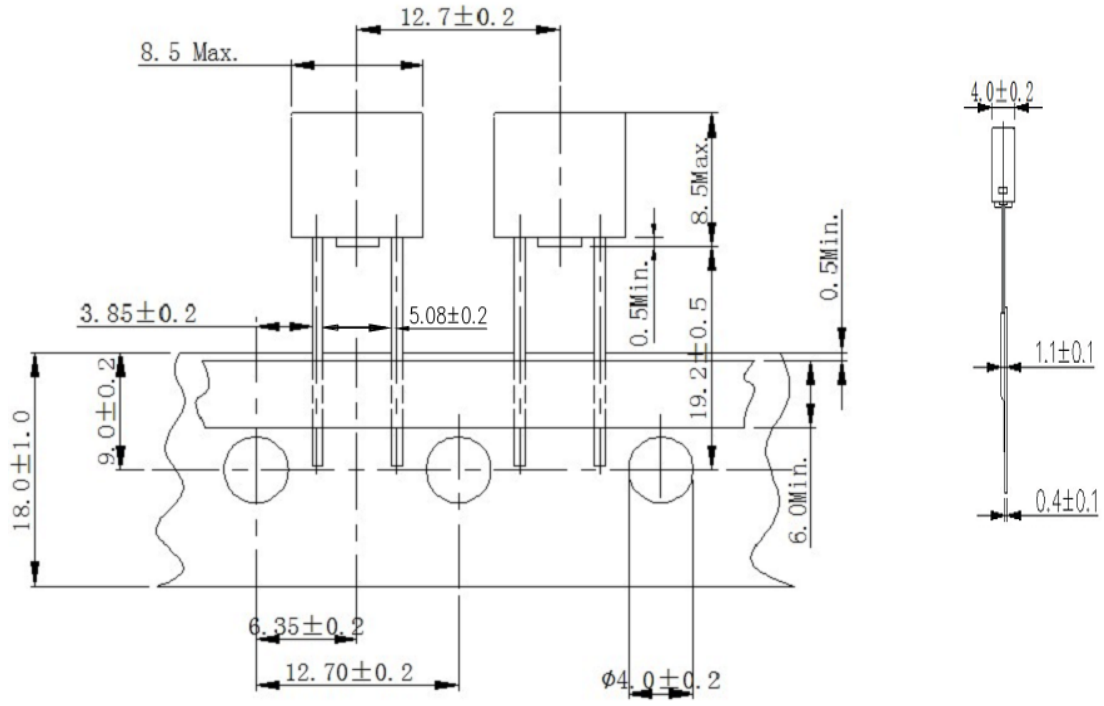

< 散裝 >

< Bulk >

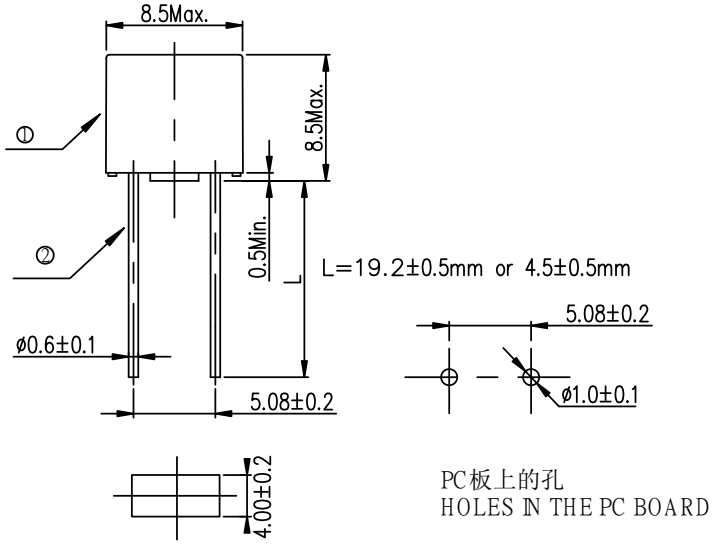

PC板上的孔
HOLES IN THE PC BOARD

6-2 結構 / Structure

編號 No.	元件 Component	材質 Material	數量 Quantity
1	本體 Body	耐熱性塑膠 Polyamide66 Thermoplastic,UL-94-Vo	1
2	端子 Termination	鍍錫銅線 Tin Plated Copper	2

7. 產品特性 / PRODUCT CHARACTERISTICS

7-1 引腳拉力強度 / Lead Pull Strength

10 牛頓 10±1 秒 / 10N for 10±1 Seconds

7-2 引腳推力強度 / Lead Thrust Strength

2 牛頓 10±1 秒 / 2N for 10±1 Seconds

7-3 可焊性 / Solderability

波峰焊/Wave : 260℃，≤3s;

烙鐵焊/Soldering Iron: 350±10℃，≤1s.

7-4 耐焊接熱 / Soldering Heat Resistance

波峰焊/Wave : 260℃，10s;

烙鐵焊/Soldering Iron: 350℃，3s.

8. 電氣特性 / ELECTRICAL CHARACTERISTICS

8-1 熔斷 / 電流特性：Pre-Arcing Time / Current Characteristic（limits） 延遲性保險絲 Time-Lag Type

RATED CURRENT	2.1 IN	2.75 IN		4 IN		10 IN	
100mA~10A	Max.	Min.	Max.	Min.	Max.	Min.	Max.
	2min	400ms	10s	150ms	3s	20ms	150ms

8-2 分斷能力 / Breaking Capacity

UL	100mA~10A	130A/250V AC
VDE	100mA~6.3A	100A/250V AC
	3.15A~6.3A	130A/250V AC
TUV	8A~10A	130A/250V AC
CCC	100mA~10A	130A/250V AC
PSE	1A~10A	100A/250V AC
SEMKO	100mA~6.3A	100A/250V AC
KC	100mA~6.3A	130A/250V AC

9. 環境特性 / ENVIRONMENTAL CHARACTERISTIC

9-1 操作溫度範圍: -55℃ ~ 125℃ / Operating Temperature:-55℃ ~ 125℃

若貴司操作環境溫度超出25±5℃範圍，在選用保險絲規格時，

需考慮操作環境溫度對保險絲的影響。

請參照：溫度-電流曲線圖。

When choosing the fuse's specification, if the operating environmental temperature beyond the scope from 20~30℃, you should consider the environmental temperature's affection to fuses. please refer:

Temperature-Current curve:

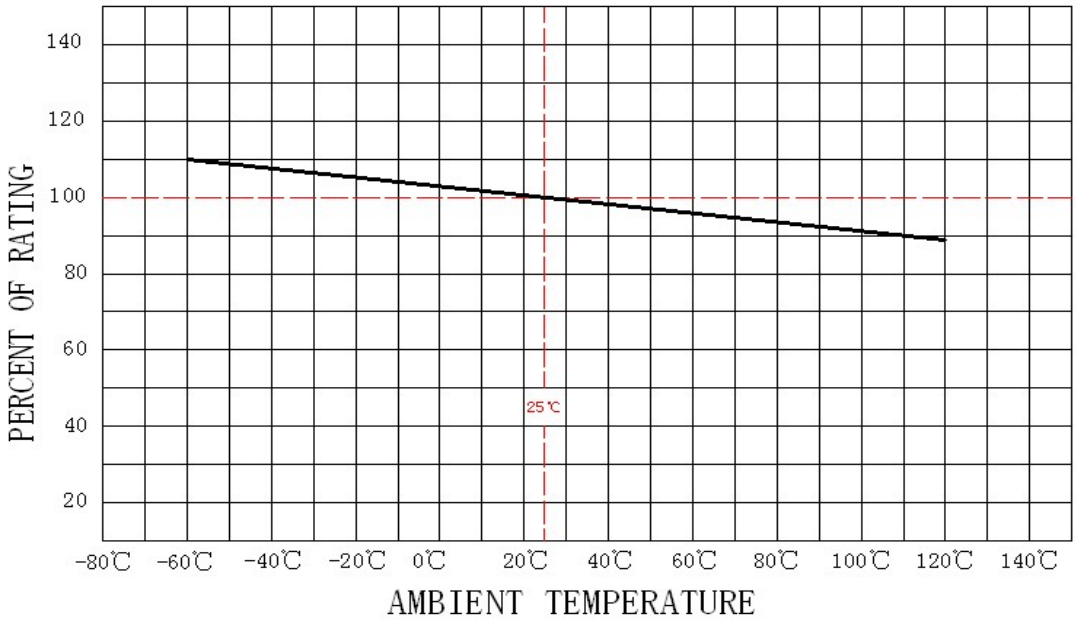

9-2 存儲條件 / Storage Conditions

在溫度+10℃～60℃、相對濕度≦75%的密閉條件下可存放 3 年。

Under airtight in temperature+10℃～60℃、relative humidity ≦75% can store 3 years.

在溫度+10℃～60℃、相對濕度為 95%的非露天下最多可存放 30 天。

Without dew in temperature+10℃～60℃、relative humidity be 95% maximum value for 30 days.

10. 安裝方式及條件 / INSTALLATION WAY AND PARAMETERS

10-1 建議如下圖安裝方式安裝，並滿足所要求的尺寸。

Propose that the following picture installation way is installed, and satisfied the required size.

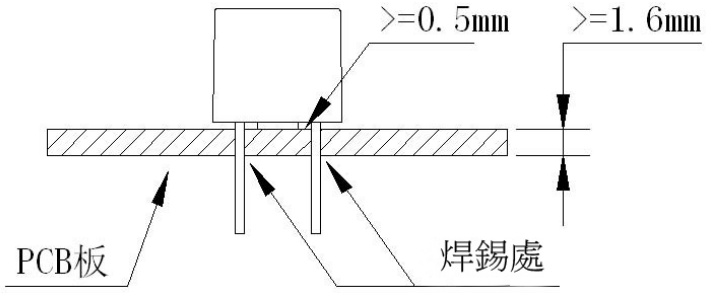

10-2 建議客戶焊接參數 / Recommended Customer Soldering Parameters

波峰焊參數 / Wave Parameters:

錫爐溫度 / Solder Pot Temperature:
260℃ Max
焊接時間 / Solder Dwell Time:
2~5s
手工焊參數 / Hand-Solder Parameters:
烙鐵溫度 / Solder Iron Temperature:
350±5℃
焊接時間 / Heating Time:
1~2 s Max

11. 其他使用注意事項 / OTHER NOTICE IN USED

符合本公司可能的其他檔的要求。
It could be in conformance with another file, which made by our company.

12. 安全認證及編號 / STANDARDS AND APPROVALS

UL	E56092 (100mA~10A)
VDE	40018781 (100mA~6.3A)
TUV	J50361151 (8A~10A)
SEMKO	SE-S-2001851 (100mA~6.3A)
PSE	JET2179-31007-1002 (1A~5A)、JET2179-31007-1001 (6.3A~10A)
CCC	2020970207000232 (100mA~10A)
KC	SU05015-12007 (100mA) 、SU05015-12006 (125mA~800mA) SU05015-12008 (1A~2.5A) 、SU05015-12002 (3.15A~6.3A)

13. 包裝 / PACKING

包裝數量 / Packing Quantity

A：編帶包裝每盒 1000 個保險絲
Taping package 1000 pcs per box

B：散裝每膠袋 1000 個保險絲
Bulk 1000 pcs/ poly bag

每盒 2 袋共 2000 個保險絲
2 poly bags / box, altogether 2000 pcs

14. 其他 / OTHERS

14-1 如果在使用中有超出本規格書的要求，必須經由雙方協商確認.
In the event that an impropriety is found beyond this specification ,it shall be fixed by mutual agreement between the parties.

14-2 如果本規格書有不適當的情況，必須通過雙方協商並由本公司修改.
In the event that an impropriety is found in this specification , SUZHOU WALTER ELECTRONIC CO., LTD. shall amend it by mutual agreement between the parties.

版次	製作	確認	審核
第二十版	蔡小梅 2020/09/09	N/A	程 錦 2020/09/09

2010 系列特殊需求項目/ Special requirements of 2010 Series

1. I^2T 值和冷阻值 / The value of I^2T and cold resistance

額定電流 Rated Current	I^2T 值(10In) / The value of I^2T （A^2Sec）	冷阻值 / cold resistance
250mA	0.71	0.420~0.840 Ω
315mA	1.00	0.350~0.700 Ω
400mA	1.5	0.230~0.450 Ω
500mA	2.9	0.160~0.320 Ω
630mA	4.3	0.110~0.220 Ω
800mA	6.5	0.080~0.160 Ω
1A	11	64.00~115.00 m Ω
1.25A	15	46.50~79.00 m Ω
1.6A	26	33.50~55.00 m Ω
2A	37	25.00~44.00 m Ω
2.5A	61	18.50~30.00 m Ω
3.15A	98	13.50~23.00 m Ω
4A	136	9.00~16.00 m Ω
5A	212	6.50~12.00 m Ω
6.3A	321	4.50~8.50m Ω
8A	360	3.50~7.50m Ω
10A	405	3.00~6.00m Ω

版次	製作	確認	審核
第一版	程正永 2020/04/07	饒紅 2020/04/07	Walker

Qisda **Component Test Report**

FUSE （ 2F / 6J.4 ） 類零件檢驗表

Vendor name	Walter	Qisda P/N	2F.12001.7C1	測試日期	2020/12/1

外觀尺寸圖

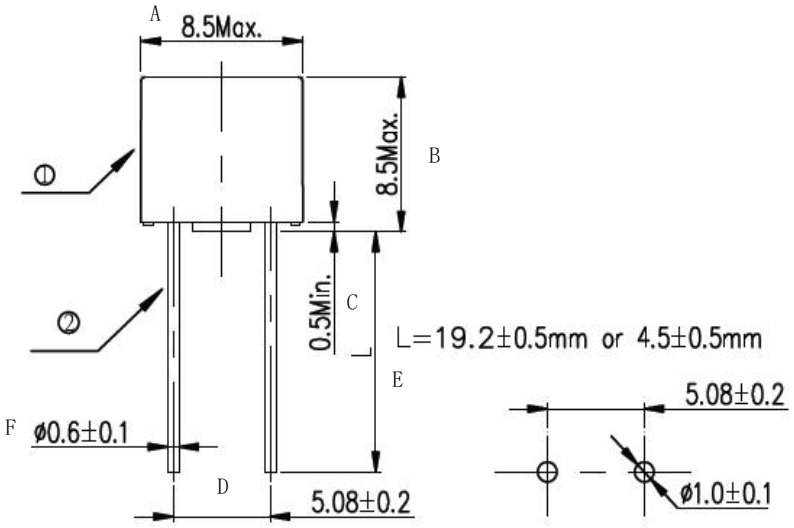

測試項目 Test item		測試結果Test Result						
尺寸規格 Dimension	測試標準 Spec. (mm)	No.1	No.2	No.3	No.4	No.5		Judge (Pass/Fail)
A	8.5 Max.	8.21	8.18	8.22	8.19	8.20		Pass
B	8.5 Max.	8.24	8.23	8.17	8.18	8.22		Pass
C	0.5 Min.	0.60	0.59	0.60	0.58	0.59		Pass
D	5.08±0.2	5.02	5.01	5.03	4.98	4.99		Pass
E	19.2±0.5	19.28	19.18	19.31	19.28	19.24		Pass
F	0.6±0.1	0.59	0.59	0.59	0.60	0.60		Pass

實物照片與Spec圖片比對

Top side



Spec drawing

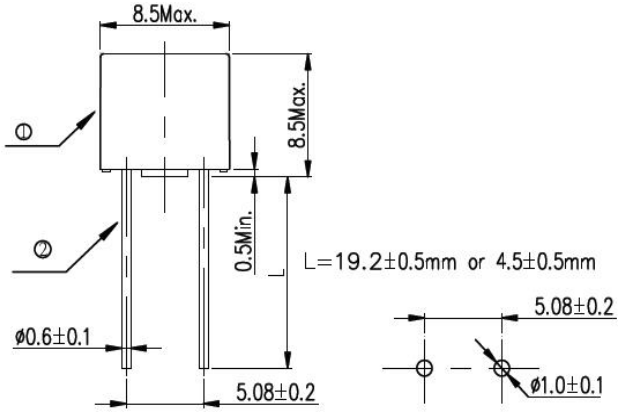

Result (Pass/Fail):	PASS	**Prepare by Maker:**	Leilei Ding	**CE:**	**Lewis Tsai**

UL iQ for Fuses

Fuses E56092

Guide Information

SUZHOU WALTER ELECTRONIC CO LTD

NO.99 Xinli Road, Fenhu Technic Development Zone, Wujiang Jiangsu 215211 CN

2010

Supplemental micro fuses: pigtail leads

Size mm(in)	Amps (A)	Volts (V)	Interrupting Rating (A)
8.4 x 4.1 x 8.4 (0.33 x 0.16 x 0.33)	0.1 - 10	250Vac	130
	0.1 - 6.3	300Vac	50
	8 - 10	300Vac	100

Report Date: 2004-05-07

Last Revised: 2019-07-22

© 2019 UL LLC

GUTACHTEN MIT FERTIGUNGSÜBERWACHUNG

CERTIFICATE OF CONFORMITY WITH FACTORY SURVEILLANCE

Suzhou Walter Electronic
Co. Ltd.
Fenhu Technic Development Zone
215211 Luxu Town, Wujiang City
Jiangsu
China

ist berechtigt, für ihr Produkt /
is authorized to use for their product

Kleinstsicherungseinsatz
Sub-miniature fuse-link

die hier abgebildeten markenrechtlich geschützten Zeichen
für die ab Blatt 2 aufgeführten Typen zu benutzen /
the legally protected Marks as shown below for the types referred to on page 2 ff.

REG B936 oder/or REG B936 oder/or VDE-REG B936

Geprüft und zertifiziert nach /
Tested and certified according to

DIN EN 60127-1 (VDE 0820-1):2015-12; EN 60127-1:2006+A1:2011+A2:2015
DIN EN 60127-3 (VDE 0820-3):2015-11; EN 60127-3:2015
IEC 60127-1:2006
IEC 60127-1:2006/AMD1:2011
IEC 60127-1:2006/AMD2:2015
IEC 60127-3:2015

Aktenzeichen: 5000410-1170-0023 / 274200
File ref.:

VDE Prüf- und Zertifizierungsinstitut GmbH
VDE Testing and Certification Institute
Zertifizierungsstelle / *Certification*

Ausweis-Nr. 40018781 Blatt 1
Certificate No. *Page*

Weitere Bedingungen siehe Rückseite und Folgeblätter /
further conditions see overleaf and following pages

Offenbach, 2006-09-05
(letzte Änderung / updated 2020-07-16)

M. Tasotti

Name und Sitz des Genehmigungs-Inhabers / *Name and registered seat of the Certificate holder*
Suzhou Walter Electronic Co. Ltd., Fenhu Technic Development Zone, 215211 LUXU TOWN, WUJIANG CITY, Jiangsu, CHINA

Aktenzeichen / *File ref.*
5000410-1170-0023 / 274200 / TL3 / EUL

letzte Änderung / *updated*
2020-07-16

Datum / *Date*
2006-09-05

Dieses Blatt gilt nur in Verbindung mit Blatt 1 des Gutachtens mit Fertigungsüberwachung Nr. 40018781.
This supplement is only valid in conjunction with page 1 of the Certificate of Conformity with factory surveillance No. 40018781.

Kleinstsicherungseinsatz
Sub-miniature fuse-link

Typ(en) / *Type(s)*

2010 Serie(s)

Bemessungsspannung *Rated voltage*	AC 250 V ; AC 300 V
Bemessungsstrom *Rated current*	100 mA; 125 mA; 160 mA; 200 mA; 250 mA; 315 mA; 400 mA; 500 mA; 630 mA; 800 mA; 1 A; 1,25 A; 1,6 A; 2 A; 2,5 A; 3,15 A; 4 A; 5 A; 6,3 A
Normblatt *Standard sheet*	4
Kennzeichnung der Charakteristik *Characteristic symbol*	T
Bemessungsausschaltvermögen *Rated breaking capacity*	130 A (AC 250 V; 3,15 A - 6,3 A) 100 A (AC 250 V; 100 mA - 6,3 A) 50 A (AC 300 V; 100 mA - 5 A) 63 A (AC 300 V; 6,3 A)
Zeit/Strom-Charakteristik *Time/current-characteristic*	träge *time-lag*
Anmerkung *Remark*	Die Prüfspannung in Abschnitt 9.2 war DC 63V. *The test Voltage in clause 9.2 was DC 63V.*

Fortsetzung siehe Blatt 3 /
continued on page 3

VDE Prüf- und Zertifizierungsinstitut
Gutachten mit Fertigungsüberwachung

Name und Sitz des Genehmigungs-Inhabers / *Name and registered seat of the Certificate holder*
Suzhou Walter Electronic Co. Ltd., Fenhu Technic Development Zone, 215211 LUXU TOWN, WUJIANG CITY, Jiangsu, CHINA

Aktenzeichen / *File ref.*	letzte Änderung / *updated*	Datum / *Date*
5000410-1170-0023 / 274200 / TL3 / EUL	2020-07-16	2006-09-05

Dieses Blatt gilt nur in Verbindung mit Blatt 1 des Gutachtens mit Fertigungsüberwachung Nr. 40018781.
This supplement is only valid in conjunction with page 1 of the Certificate of Conformity with factory surveillance No. 40018781.

Ausführung(en) *Construction(s)*	Rechteckige Bauform *Rectangular shape*

Dieser Zeichengenehmigungs-Ausweis bildet eine Grundlage für die EG-Konformitätserklärung und CE-Kennzeichnung durch den Hersteller oder dessen Bevollmächtigten und bescheinigt die Konformität mit den grundlegenden Schutzanforderungen der **EG-Niederspannungsrichtlinie 2014/35/EU.**
This Marks Approval is a basis for the EC Declaration of Conformity and the CE Marking by the manufacturer or his agent and proves the conformity with the essential safety requirements of the ***EC Low-Voltage Directive 2014/35/EU.***

VDE Prüf- und Zertifizierungsinstitut GmbH
VDE Testing and Certification Institute
Fachgebiet TL3
Section TL3

Merianstrasse 28, D-63069 Offenbach
Phone +49 (0) 69 83 06-0
Telefax +49 (0) 69 83 06-555

VDE Prüf- und Zertifizierungsinstitut
Gutachten mit Fertigungsüberwachung

Ausweis-Nr. / *Certificate No.*
40018781

Beiblatt / *Supplement*

Name und Sitz des Genehmigungs-Inhabers / *Name and registered seat of the Certificate holder*
Suzhou Walter Electronic Co. Ltd., Fenhu Technic Development Zone, 215211 LUXU TOWN, WUJIANG CITY, Jiangsu, CHINA

Aktenzeichen / *File ref.*	letzte Änderung / *updated*	Datum / *Date*
5000410-1170-0023 / 274200 / TL3 / EUL	2020-07-16	2006-09-05

Dieses Beiblatt ist Bestandteil des Gutachtens mit Fertigungsüberwachung Nr. 40018781.
This supplement is part of the Certificate of Conformity with factory surveillance No. 40018781.

Kleinstsicherungseinsatz
Sub-miniature fuse-link

Fertigungsstätte(n)
Place(s) of manufacture

Referenz/*Reference*	
30011941	Suzhou Walter Electronic Co. Ltd. Fenhu Technic Development Zone 215211 LUXU TOWN, WUJIANG CITY Jiangsu CHINA

VDE Prüf- und Zertifizierungsinstitut GmbH
VDE Testing and Certification Institute
Fachgebiet TL3
Section TL3

VDE Prüf- und Zertifizierungsinstitut
Gutachten mit Fertigungsüberwachung

Ausweis-Nr. / *Certificate No.*: 40018781

Infoblatt / *Info sheet*

Name und Sitz des Genehmigungs-Inhabers / *Name and registered seat of the Certificate holder*

Suzhou Walter Electronic Co. Ltd., Fenhu Technic Development Zone, 215211 LUXU TOWN, WUJIANG CITY, Jiangsu, CHINA

Aktenzeichen / *File ref.*	letzte Änderung / *updated*	Datum / *Date*
5000410-1170-0023 / 274200 / TL3 / EUL	2020-07-16	2006-09-05

Dieses Blatt gilt nur in Verbindung mit Blatt 1 des Gutachtens mit Fertigungsüberwachung Nr. 40018781.
This supplement is only valid in conjunction with page 1 of the Certificate of Conformity with factory surveillance No. 40018781.

Genehmigung zum Benutzen des auf Seite 1 abgebildeten markenrechtlich geschützten Zeichens des VDE:

Grundlage für die Benutzung sind die Allgemeinen Geschäftsbedingungen (AGB) der VDE Prüf- und Zertifizierungsinstitut GmbH (www.vde.com\AGB-Institut). Das Recht zur Benutzung erstreckt sich nur auf die bezeichnete Firma mit den genannten Fertigungsstätten und die oben aufgeführten Produkte mit den zugeordneten Bezeichnungen. Die Fertigungsstätte muss so eingerichtet sein, dass eine gleichmäßige Herstellung der geprüften und zertifizierten Ausführung gewährleistet ist.
Die Genehmigung ist so lange gültig wie die VDE-Bestimmungen gelten, die der Zertifizierung zugrunde gelegen haben, sofern sie nicht auf Grund anderer Bedingungen aus der VDE Prüf- und Zertifizierungsordnung (PM102) zurückgezogen werden muss.
Der Gültigkeitszeitraum einer VDE-GS-Zeichengenehmigung kann auf Antrag verlängert werden. Bei gesetzlichen und / oder normativen Änderungen kann die VDE-GS-Zeichengenehmigung ihre Gültigkeit zu einem früheren als dem angegebenen Datum verlieren.
Produkte, die das Biozid Dimethylfumarat (DMF) enthalten, dürfen gemäß der Kommissionsentscheidung 2009/251/EG nicht mehr in den Verkehr gebracht oder auf dem Markt bereitgestellt werden.
Der VDE-Zeichengenehmigungsausweis wird ausschließlich auf der ersten Seite unterzeichnet.

Approval to use the legally protected Mark of the VDE as shown on the first page:
Basis for the use are the general terms and conditions of the VDE Testing and Certification Institute (www.vde.com\terms-institute). The right to use the mark is granted only to the mentioned company with the named places of manufacture and the listed products with the related type references. The place of manufacture shall be equipped in a way that a constant manufacturing of the certified construction is assured.
The approval is valid as long as the VDE specifications are in force, on which the certification is based on, unless it is withdrawn according to the VDE Testing and Certification Procedure (PM102E).
The validity period of a VDE-GS-Mark Approval may be prolonged on request. In case of changes in legal and / or normative requirements, the validity period of a VDE-GS-Mark Approval may be shortened.
Products containing the biocide dimethylfumarate (DMF) may not be marketed or made available on the EC market according to the Commission Decision 2009/251/EC.
The approval is solely signed on the first page.

CERTIFICATE

FOR EUROPEAN PRODUCT SAFETY

Reference No. SE-S-2001851

Sub-miniature fuse-link

Type designation: 2010

Certificate holder: Suzhou Walter Electronic Co., Ltd.
Fenhu Technic Development Zone
Wujiang, Jiangsu
CHINA

The product complies with the standard(s): EN 60127-3:2015

Date of expiry: 12 December, 2024

EU Directive information: According to the principle of presumption of conformity, this certificate constitutes support for an EC Declaration of Conformity and CE marking according to the Low Voltage Directive 2014/35/EU.

Additional information in Appendix

Certification Body: Intertek Semko AB, Product Certification **Place:** Kista - Stockholm

Signed: Leif Söderlund **Date:** 30 June, 2020

Leif Söderlund

This Certificate is for the exclusive use of Intertek's client and is provided pursuant to the agreement between Intertek and its Client. Intertek's responsibility and liability are limited to the terms and conditions of the agreement. Intertek assumes no liability to any party, other than to the Client in accordance with the agreement, for any loss, expense or damage occasioned by the use of this Certificate. Only the Client is authorized to permit copying or distribution of this Certificate and then only in its entirety. Any use of the Intertek name or one of its marks for the sale or advertisement of the tested material, product or service must first be approved in writing by Intertek.

APPENDIX:

Reference No. SE-S-2001851

Technical Data:

Type designation	2010
Rated voltage (V)	250V AC
Rated current (A)	100mA; 125mA; 160mA; 200mA; 250mA; 315mA; 400mA; 500mA; 630mA; 800mA; 1A; 1.25A; 1.6A; 2A; 2.5A; 3.15A; 4A; 5A; 6.3A
Standard sheet	4
Trademark	
Test Report	1917011STO-001, 2020041STO-003, 1917011STO-002, 2020041STO-004
Product information	Time-lag, low-breaking capacity. Rectangular shape. Rated breaking capacity: 100A.

Manufacturing Sites: Suzhou Walter Electronic Co., Ltd.
Fenhu Technic Development Zone
Wujiang, Jiangsu
China

According to the principle of presumption of conformity, this certificate, which includes production control, constitutes support for an EC Declaration of Conformity and CE marking according to the Low Voltage Directive 2014/35/EU.
This presumption can expire before end of validity of this certificate due to new issued Standard or Amendment and changes within the EU legislation.

This certificate replaces previously issued ref. No. 1917011 dated 12 December 2019.
A new certificate has been issued due to removal of factory.

Certification Body: Intertek Semko AB, Product Certification **Place:** Kista - Stockholm

Signed: Leif Söderlund **Date:** 30 June, 2020

Leif Söderlund

This Certificate is for the exclusive use of Intertek's client and is provided pursuant to the agreement between Intertek and its Client. Intertek's responsibility and liability are limited to the terms and conditions of the agreement. Intertek assumes no liability to any party, other than to the Client in accordance with the agreement, for any loss, expense or damage occasioned by the use of this Certificate. Only the Client is authorized to permit copying or distribution of this Certificate and then only in its entirety. Any use of the Intertek name or one of its marks for the sale or advertisement of the tested material, product or service must first be approved in writing by Intertek.

Zertifikat
mit überwachter Konformität

Certificate
of surveyed conformity

TÜVRheinland®

Zertifikat Nr. ***Certificate No.***
J 50361151

Blatt ***Page***
0001

Ihr Zeichen *Client Reference*	**Unser Zeichen** *Our Reference*	**Ausstellungsdatum** *Date of Issue*
	05-ZHANGVIVI-50049138 001	26.10.2016 *(day/mo/yr)*

Genehmigungsinhaber ***License Holder***
Walter Electronic Co., Ltd.
2nd FL. 97 Chung King N RD., Sec. 4
Taipei
Taiwan

Fertigungsstätte ***Manufacturing Plant***
Dongguan Walter Electric Co., Ltd.
Yantian Village, Fenggang Town
Dongguan, Guangdong 523702
P.R. China

Prüfzeichen ***Test Mark***

TÜVRheinland® CERTIFIED
Safety
Regular
Production
Surveillance
www.tuv.com
ID 1419040825

Geprüft nach ***Tested acc. to***
EN 60127-1:2006+A1+A2
EN 60127-3:2015

Zertifiziertes Produkt (Geräteidentifikation)
Certified Product (Product Identification)

(Sub-miniature Fuse)

Lizenzentgelte - Einheit
License Fee - Unit

Type Designation	:	2010
Trademark	:	Walter(Logo)
Rated Voltage	:	AC 250V
Rated Current	:	0A; 10A
Rated Breaking Capacity	:	130A at 250VAC 100A at 300VAC
T/I Characteristic	:	T

6

Remark :
1) The requirements of standard sheet 4 were taken into consideration.
2) The labelling requirements acc. to EU Directive 2001/95 have to be observed for distribution within the EEA.
3) The installation has to be carried out according to installation instruction accompanying the products.

6

ANLAGE (Appendix): 1

Dem Zertifikat liegt unsere Prüf- und Zertifizierungsordnung zugrunde.
Das Produkt entspricht den o.g. Anforderungen, die Herstellung wird überwacht.
This certificate is based on our Testing and Certification Regulation. The product fulfills above mentioned requirements, the production is subject to surveillance.

Zertifizierungsstelle

TÜV Rheinland LGA Products GmbH Zertifizierungsstelle

G. Yin

TÜV Rheinland LGA Products GmbH, Tillystraße 2, 90431 Nürnberg
Tel.: +49 221 806-1371 e-mail: cert-validity@de.tuv.com
Fax: +49 221 806-3935 http://www.tuv.com/safety

10020 d 04.08 ® TÜV, TUEV and TUV are registered trademarks. Utilisation and application requires prior approval.

Zertifikat
mit überwachter Konformität

Certificate
of surveyed conformity

TÜVRheinland®

Zertifikat Nr. ***Certificate No.***
J 50361151

Blatt ***Page***
0002

Ihr Zeichen *Client Reference*	**Unser Zeichen** *Our Reference*	**Ausstellungsdatum** *Date of issue*
	05-ZHANGVIVI-50049138 001	26.10.2016 *(day/mo/yr)*

Genehmigungsinhaber ***License Holder***
Walter Electronic Co., Ltd.
2nd FL. 97 Chung King N RD., Sec. 4
Taipei
Taiwan

Fertigungsstätte ***Manufacturing Plant***
Suzhou Walter Electronic Co., Ltd.
Fenhu Technic Development Zone, Luxu
Wujiang City, Jiangsu
P.R. China

Prüfzeichen ***Test Mark***

TÜVRheinland® CERTIFIED
Safety
Regular
Production
Surveillance
www.tuv.com
ID 1419040825

Geprüft nach ***Tested acc. to***
EN 60127-1:2006+A1+A2
EN 60127-3:2015

Zertifiziertes Produkt (Geräteidentifikation)
Certified Product (Product Identification)

(Sub-miniature Fuse)

As page 0001

Addition

Factory : see above

Remark :
The labelling requirements acc. to EU Directive 2001/95 have to be observed for distribution within the EEA.
The installation has to be carried out according to installation instruction accompanying the products.

Lizenzentgelte - Einheit
License Fee - Unit

Dem Zertifikat liegt unsere Prüf- und Zertifizierungsordnung zugrunde.
Das Produkt entspricht den o.g. Anforderungen, die Herstellung wird überwacht.
This certificate is based on our Testing and Certification Regulation. The product fulfills above mentioned requirements, the production is subject to surveillance.

Zertifizierungsstelle

TÜV Rheinland LGA Products GmbH Zertifizierungsstelle

G. Yin

TÜV Rheinland LGA Products GmbH, Tillystraße 2, 90431 Nürnberg
Tel.: +49 221 806-1371 e-mail: cert-validity@de.tuv.com
Fax: +49 221 806-3935 http://www.tuv.com/safety

10/020 d 04.06 TÜV, TUEV and TUV are registered trademarks. Utilisation and application requires prior approval.

Zertifikat
mit überwachter Konformität

Certificate
of surveyed conformity

TÜVRheinland®

Zertifikat Nr. ***Certificate No.***
J 50361151

Blatt ***Sheet***
0003

Ihr Zeichen ***Client Reference***	**Unser Zeichen** ***Our Reference***	**Ausstellungsdatum**	***Date of Issue***
	05-YFC-50049138 002	17.07.2018	***(day/mo/yr)***

Genehmigungsinhaber ***License Holder***
Suzhou Walter Electronic Co., Ltd.
Fenhu Technic Development Zone, Luxu
Wujiang City, Jiangsu
P. R. China

Fertigungsstätte ***Manufacturing Plant***
Suzhou Walter Electronic Co., Ltd.
Fenhu Technic Development Zone, Luxu
Wujiang City, Jiangsu
P. R. China

Prüfzeichen ***Test Mark***

TÜVRheinland® CERTIFIED
Safety
Regular
Production
Surveillance
www.tuv.com
ID 1419040825

Geprüft nach ***Tested acc. to***
EN 60127-1:2006+A1+A2
EN 60127-3:2015

Zertifiziertes Produkt (Geräteidentifikation)
Certified Product ***(Product Identification)***

Lizenzentgelte - Einheit
License Fee - Unit

(Sub-miniature Fuse)

as pages 0001-0002

Change

Name and address of License Holder : see above

Remark :
The labelling requirements acc. to EU Directive 2001/95 have to be observed for distribution within the EEA.
The installation has to be carried out according to installation instruction accompanying the products.

Dem Zertifikat liegt unsere Prüf- und Zertifizierungsordnung zugrunde.
Das Produkt entspricht den o.g. Anforderungen, die Herstellung wird überwacht.
This certificate is based on our Testing and Certification Regulation. The product fulfills above mentioned requirements, the production is subject to surveillance.

Zertifizierungsstelle

TÜV Rheinland LGA Products GmbH
TÜVRheinland®
Zertifizierungsstelle

G. Yin

TÜV Rheinland LGA Products GmbH, Tillystraße 2, 90431 Nürnberg
Tel.: +49 221 806-1371 e-mail: cert-validity@de.tuv.com
Fax: +49 221 806-3935 http://www.tuv.com/safety

Zertifikat
mit überwachter Konformität

Certificate
of surveyed conformity

TÜVRheinland®

Zertifikat Nr. ***Certificate No.***
J 50361151

Blatt ***Sheet***
0004

Ihr Zeichen *Client Reference*	**Unser Zeichen** *Our Reference*	**Ausstellungsdatum**	*Date of Issue*
	05-YFC-50049138 003	06.09.2018	*(day/mo/yr)*

Genehmigungsinhaber ***License Holder***
Suzhou Walter Electronic Co., Ltd.
Fenhu Technic Development Zone, Luxu
Wujiang City, Jiangsu
P. R. China

Fertigungsstätte ***Manufacturing Plant***
Dongguan Walter Electric Co., Ltd.
Yantian Village, Fenggang Town
Dongguan, Guangdong 523702
P. R. China

Prüfzeichen ***Test Mark***

TÜVRheinland CERTIFIED
Safety
Regular
Production
Surveillance
www.tuv.com
ID 1419040825

Geprüft nach ***Tested acc. to***
EN 60127-1:2006+A1+A2
EN 60127-3:2015

Zertifiziertes Produkt (Geräteidentifikation)
Certified Product ***(Product Identification)***

Lizenzentgelte - Einheit
License Fee - Unit

(Sub-miniature Fuse)

as pages 0001-0003

Addition

Rated Voltage : AC 300V

Remark :
The labelling requirements acc. to EU Directive
2001/95 have to be observed for distribution within the EEA.
The installation has to be carried out according to
installation instruction accompanying the products.

Dem Zertifikat liegt unsere Prüf- und Zertifizierungsordnung zugrunde.
Das Produkt entspricht den o.g. Anforderungen, die Herstellung wird überwacht.
This certificate is based on our Testing and Certification Regulation. The product fulfills above mentioned requirements, the production is subject to surveillance.

Zertifizierungsstelle

TÜV Rheinland LGA Products GmbH, Tillystraße 2, 90431 Nürnberg
Tel.: +49 221 806-1371 e-mail: cert-validity@dc.tuv.com
Fax: +49 221 806-3935 http://www.tuv.com/safety

强制性认证产品符合性自我声明

自我声明编号：2020970207000232

苏州华德电子有限公司（生产者） 确认知晓《强制性产品认证自我声明实施规则》以及相关产品强制性认证实施规则的要求，对本声明承担全部法律责任。

苏州华德电子有限公司（生产者） 声明以下产品已按照《强制性产品认证自我声明实施规则》以及相关产品强制性认证实施规则的要求进行检测， 符合相关标准要求；自本声明签署之日起，生产和销售的产品持续符合以下标准与实施规则的要求；保存本声明涉及的技术文档至少10年； 正确使用强制性产品认证标志；如产品或其符合性信息发生变更，将及时更新技术文档并报送产品变更信息。

生产者名称：	苏州华德电子有限公司
生产者地址：	江苏省苏州市吴江区汾湖经济技术开发区(芦墟)
依据的强制性产品认证规则：	CNCA-00C-008：2019 强制性产品认证实施规则自我声明
产品名称：	超小型熔断体
产品系列、型号、规格：	见附件
依据的标准：	GB/T9364.3-2018;GB/T9364.1-2015
生产企业名称：	苏州华德电子有限公司
生产企业地址：	江苏省吴江汾湖经济开发区新黎路99号

联系人： 杜技伟
电话： 0769-87772561 (Ext. 134)
电子邮箱： td.chiang@walterfuse.com

指定签字人：

自我声明时间： 2020-08-31
自我声明地点： 苏州

生产者签章：

注：有关本声明信息真伪可登录全国认证认可信息公共服务平台（cx.cnca.cn）或扫描右上角二维码查询。

证书编号：2020970207000232　　纸 号：

产品名称：超小型熔断体
型号：2010 T100mA250V AC、2010 T125mA250V AC、
2010 T160mA250V AC、2010 T200mA250V AC、
2010 T250mA250V AC、2010 T315mA250V AC、
2010 T400mA250V AC、2010 T500mA250V AC、
2010 T630mA250V AC、2010 T800mA250V AC、
2010 T1A250V AC、2010 T1.25A250V AC、
2010 T1.6A250V AC、2010 T2A250V AC、
2010 T2.5A250V AC、2010 T3.15A250V AC、
2010 T4A250V AC、2010 T5A250V AC、
2010 T6.3A250V AC、2010 T8A250V AC、
2010 T10A250V AC

注：此附录与证书同时使用时有效。

適 合 同 等 証 明 書

Statement of Conformity Assessment

電気用品安全法第８条第１項に規定する技術基準及び同法第９条第２項の経済産業省令で定める基準（法第９条第１項第２号に係る検査に係るものに限る）に適合していることを証明します

I hereby certify that the product mentioned below complies with the technical requirements stipulated in Paragraph 1 of Article 8 of Electrical Appliances and Materials Safety Act(here under referred to as the Act) and the requirements defined by the ordinance of the Ministry of Economy, Trade and Industry based on Paragraph 2 of Article 9 of the Act (limited to Item 2 of Paragraph 1 of Article 9 for Inspection of the Act).

１．証明書番号：Statement Number　ＪＥＴ２１７９－３１００７－１００１

２．交付年月日：Effective Date　2019年 9月29日　September 29.2019

３．有効年月日：Date of Validity　2026年 9月28日　September 28.2026

４．申込者名 (Applicant)

住所：Address　FENHU TECHNIC DEVELOPMENT ZONE WUJIANG, JIANGSU PROVINCE, CHINA

氏名又は名称：Name　SUZHOU WALTER ELECTRONIC CO., LTD.

５．特定電気用品名：Name of Product　その他の包装ヒューズ　Other enclosed fuses

６．型式の区分：Type Classification　別紙のとおり　See attached "Type Classification"

７．製造工場名 (Manufacturer)

住所：Address　FENHU TECHNIC DEVELOPMENT ZONE WUJIANG, JIANGSU PROVINCE, CHINA

氏名又は名称：Name　SUZHOU WALTER ELECTRONIC CO., LTD.

８．適用試験規格：Applied Standard for Testing　電気用品の技術上の基準を定める省令の解釈　Description of the technical requirements by the METI Ordinance　別表第三２　Appendix 3 Section 2

９．適合性検査の方法：(Testing Method for Conformity Assessment)

1)試験用の特定電気用品については、電気用品の技術上の基準を定める省令の解釈に定める方法

With respect to testing for Category A products, the testing method is based on the technical requirements of the description of Electrical Appliances and Materials stipulated in the METI Ordinance.

2)当該特定電気用品に係る届出事業者又は事業場における検査設備については、電気用品安全法施行規則別表第四の検査設備の欄に掲げる検査設備ごとにそれぞれ同表の技術上の基準の欄に掲げる方法

With respect to inspection facilities required for Category A products at the factory, Testing Method described in the column of the technical requirements for each inspection facilities in the column of inspection facilities is shown in the Appendix 4 of Enforcement Regulations of the Act.

１０．注意事項

1) この適合同等証明書は、提出された試験用の電気用品に関して評価を行った上で交付したものであり、同一の型式の区分にある電気用品について電気用品安全法第８条１項に規定する技術基準適合確認の義務を履行したことを示すものではありません。

This Statement of Conformity Assessment, which is issued on the evaluation of the submitted test-use Electrical Appliances and Materials, does not signify that the Obligation to Comply with Requirements, which is prescribed at Paragraph 1 of Article 8 of the Act, is fulfilled on Electrical Appliances and Materials in the same Type Classification.

2) この適合同等証明書は、別紙に記載されている型式の区分の範囲内及び区分の組み合わせについてのみ有効です。

This Statement of Conformity Assessment is valid only for Electrical Appliances and Materials within the Type Classifications and their combination as stated in the attached "Type Classification".

一般財団法人　電気安全環境研究所
Japan Electrical Safety & Environment technology Laboratories(JET)
理事長　薦田　康久
President　Yasuhisa Komoda
東京都渋谷区代々木５－１４－１２
(5-14-12, Yoyogi, Shibuya-ku, Tokyo, Japan)

証明書番号：ＪＥＴ２１７９－３１００７－１００１

適合同等証明書別紙

Statement of Conformity Assessment

型　式　の　区　分

Type Classification

要素 Factor	区分 Classification
定格電圧 Rated voltage	(2) 125Vを超えるもの Exceeding 125V
定格電流（定格電流表示のあるものの場合に限る。） Rated current (limited to those with rated current markings)	(2) ５Ａを超え15Ａ以下のもの Exceeding 5A, and less than or equal to 15A
適用電動機の定格容量（定格電流表示のないものの場合に限る。） Rated capacity of applicable motor (limited to those without rated current markings)	－
可溶体の主材料 Fuse element materials	(5) 銅のもの Copper
可溶体の数 Number of fuse elements	(1) １のもの One
再使用（管形ヒューズを除く。） Reusability (excluding cartridge fuses)	(2) できないもの Not reusable
内部充てん物 Filler materials	(1) あるもの With filler materials
筒（内筒を除く。）の材料 Outer cartridge materials	(7) その他のもの Others
端子 Terminals	(5) その他のもの Others
排気孔 Exhausting opening	(2) ないもの Without exhausting opening
溶断の表示 Blowout fuse indicator	(2) ないもの Without blowout fuse indicator
用途 Application	(2) 電子機器用のもの For use in electric appliances
定格遮断電流 Rated breaking capacity	(1) 100Ａ以下のもの 100A or less

適 合 同 等 証 明 書

Statement of Conformity Assessment

電気用品安全法第８条第１項に規定する技術基準及び同法第９条第２項の経済産業省令で定める基準（法第９条第１項第２号に係る検査に係るものに限る）に適合していることを証明します

I hereby certify that the product mentioned below complies with the technical requirements stipulated in Paragraph 1 of Article 8 of Electrical Appliances and Materials Safety Act(here under referred to as the Act) and the requirements defined by the ordinance of the Ministry of Economy, Trade and Industry based on Paragraph 2 of Article 9 of the Act (limited to Item 2 of Paragraph 1 of Article 9 for Inspection of the Act).

１．証明書番号：Statement Number　ＪＥＴ２１７９－３１００７－１００２

２．交付年月日：Effective Date　2019年 9月29日　September 29.2019

３．有効年月日：Date of Validity　2026年 9月28日　September 28.2026

４．申込者名 (Applicant)

住所：Address　FENHU TECHNIC DEVELOPMENT ZONE WUJIANG, JIANGSU PROVINCE, CHINA

氏名又は名称：Name　SUZHOU WALTER ELECTRONIC CO., LTD.

５．特定電気用品名：Name of Product　その他の包装ヒューズ　Other enclosed fuses

６．型式の区分：Type Classification　別紙のとおり　See attached "Type Classification"

７．製造工場名 (Manufacturer)

住所：Address　FENHU TECHNIC DEVELOPMENT ZONE WUJIANG, JIANGSU PROVINCE, CHINA

氏名又は名称：Name　SUZHOU WALTER ELECTRONIC CO., LTD.

８．適用試験規格：Applied Standard for Testing　電気用品の技術上の基準を定める省令の解釈　Description of the technical requirements by the METI Ordinance　別表第三２　Appendix 3 Section 2

９．適合性検査の方法：(Testing Method for Conformity Assessment)

1) 試験用の特定電気用品については、電気用品の技術上の基準を定める省令の解釈に定める方法

With respect to testing for Category A products, the testing method is based on the technical requirements of the description of Electrical Appliances and Materials stipulated in the METI Ordinance.

2) 当該特定電気用品に係る届出事業者又は事業場における検査設備については、電気用品安全法施行規則別表第四の検査設備の欄に掲げる検査設備ごとにそれぞれ同表の技術上の基準の欄に掲げる方法

With respect to inspection facilities required for Category A products at the factory, Testing Method described in the column of the technical requirements for each inspection facilities in the column of inspection facilities is shown in the Appendix 4 of Enforcement Regulations of the Act.

１０．注意事項

1) この適合同等証明書は、提出された試験用の電気用品に関して評価を行った上で交付したものであり、同一の型式の区分にある電気用品について電気用品安全法第８条１項に規定する技術基準適合確認の義務を履行したことを示すものではありません。

This Statement of Conformity Assessment, which is issued on the evaluation of the submitted test-use Electrical Appliances and Materials, does not signify that the Obligation to Comply with Requirements, which is prescribed at Paragraph 1 of Article 8 of the Act, is fulfilled on Electrical Appliances and Materials in the same Type Classification.

2) この適合同等証明書は、別紙に記載されている型式の区分の範囲内及び区分の組み合わせについてのみ有効です。

This Statement of Conformity Assessment is valid only for Electrical Appliances and Materials within the Type Classifications and their combination as stated in the attached "Type Classification".

一般財団法人　電気安全環境研究所
Japan Electrical Safety & Environment technology Laboratories (JET)
理事長　薦田　康久
President　Yasuhisa Komoda
東京都渋谷区代々木５－１４－１２
(5-14-12, Yoyogi, Shibuya-ku, Tokyo, Japan)

証明書番号：ＪＥＴ２１７９－３１００７－１００２

適合同等証明書別紙

Statement of Conformity Assessment

型　式　の　区　分

Type Classification

要　素 Factor	区　分 Classification
定格電圧 Rated voltage	(2) 125Vを超えるもの Exceeding 125V
定格電流（定格電流表示のあるものの場合に限る。） Rated current (limited to those with rated current markings)	(1) ５Ａ以下のもの 5A or less
適用電動機の定格容量（定格電流表示のないものの場合に限る。） Rated capacity of applicable motor (limited to those without rated current markings)	－
可溶体の主材料 Fuse element materials	(5) 銅のもの Copper
可溶体の数 Number of fuse elements	(1) １のもの One
再使用（管形ヒューズを除く。） Reusability (excluding cartridge fuses)	(2) できないもの Not reusable
内部充てん物 Filler materials	(1) あるもの With filler materials
筒（内筒を除く。）の材料 Outer cartridge materials	(7) その他のもの Others
端子 Terminals	(5) その他のもの Others
排気孔 Exhausting opening	(2) ないもの Without exhausting opening
溶断の表示 Blowout fuse indicator	(2) ないもの Without blowout fuse indicator
用途 Application	(2) 電子機器用のもの For use in electric appliances
定格遮断電流 Rated breaking capacity	(1) 100Ａ以下のもの 100A or less

접 수 번 호 (Receipt No.) : 12-1920-0341

전기용품안전인증서

Electrical Appliances Safety Certificate

안전인증번호 (Certificate No.)	: SU05015-12002
제 조 업 자 명 (Factory)	: Suzhou Walter Electronic Co., Ltd.
대 표 자 명 (President)	: Mr. Yen Chun Chang
제조공장의 소재지 (Factory Address)	: Fenhu, Technic Development Zone, Luxu Wu Jiang, Jiangsu, P.R.China
제 품 명 (Product)	: 퓨즈(Sub-miniature fuse-links)
기 본 모 델 명 (Basic Model)	: 2010 6.3A 250V
정 격 (Rating)	: T6.3A 250Vac
파 생 모 델 명 (Series Model)	: 2010 3.15A 250V, 2010 4A 250V, 2010 5A 250V
적 용 기 준 (Standard)	: K60127-1(2011-12), K60127-3(2006-07)

「전기용품안전 관리법 시행규칙」 제6조제2항에 따라 위의 전기용품에 대하여 안전인증서를 발급합니다.

We Issue Electrical Appliances Safety Certification as above product by Article 6 Section 2 of the Electrical Appliances Safety Control Law Enforcement Regulation.

2012년 02월 15일
year month day

ktl 한국산업기술시험원장
KOREA TESTING LABORATORY

※ 이 인증서는 「전기용품안전 관리법」에 따른 전기용품 안전성 확인에 한정된 것이며, 그 밖의 다른 법률이 적용되는 제품의 경우에는 해당 법률에 따라 추가로 인증·허가 등을 받아야 합니다.

첨 부 (Annex) :
1. 안전관리부품 및 재질목록 (List of Critical Components)
2. 기본모델·파생모델의 내용 (General Descriptions of Certified Products)
3. 전기용품안전인증의 변경 현황 (Status of Certificate Revisions)

□ 첨부 2 : 기본모델 · 파생모델의 내용
General description of Certified Products

파생모델명 Derivative model	기본모델과의 차이점 Differences between the basic and derivative model(s)
2010 3.15A 250V	Rated current(3.15A) is different
2010 4A 250V	Rated current(4A) is different
2010 5A 250V	Rated current(5A) is different

제품특기사항 및 시험조건
Remarks & Test conditions

1. Test Report Ref. No. : 12-1920-0341 (2012.02.14.)

2. Product Description
   - 6.3A 250Vac
   - Breaking capacity : 130A
   - Time lag type, Low-breaking capacity
   - Standard sheet 4

□ 본 제품의 시험내용에 관하여 문의하실 사항이 있으시면 아래 연락처로 문의하시기 바랍니다.
시험 담당자 / 연락처: 디지털산업본부 전기전자기술센터 조인철 / (02)860-1425
□ *If you have any question on product testing, please contact the person below :*
Job holder: Digital Industry Division, Electrics & Electronics Technology Center, INCHUL CHO/+82 2 8601-425

FP511-09-00

□ 첨부 3 : 전기용품안전인증의 변경 현황
Status of Certificate Revisions

변경발급 내용 Contents of Certificate Revisions
Not applicable

FP511-11-00

접 수 번 호 (Receipt No.) : 12-1920-1601

전기용품안전인증서

Electrical Appliances Safety Certificate

안전인증번호 (Certificate No.)	: SU05015-12008
제 조 업 자 명 (Factory)	: Suzhou Walter Electronic Co., Ltd.
대 표 자 명 (President)	: Mr. Yen Chun Chang
제조공장의 소재지 (Factory Address)	: Fenhu, Technic Development Zone, Luxu Wu Jiang, Jiangsu, P.R.China
제 품 명 (Product)	: 퓨즈(Sub-miniature fuse-links)
기 본 모 델 명 (Basic Model)	: 2010 T2.5A 250V
정 격 (Rating)	: 250 V 2.5 A, 130 A
파 생 모 델 명 (Series Model)	: See the attachment 2
적 용 기 준 (Standard)	: K60127-1(2011-12), K60127-3(2006-07)

「전기용품안전 관리법 시행규칙」 제6조제2항에 따라 위의 전기용품에 대하여 안전인증서를 발급합니다.

We Issue Electrical Appliances Safety Certification as above product by Article 6 Section 2 of the Electrical Appliances Safety Control Law Enforcement Regulation.

2012년 *year* 05월 *month* 11일 *day*

ktl 한국산업기술시험원장
KOREA TESTING LABORATORY

※ 이 인증서는 「전기용품안전 관리법」에 따른 전기용품 안전성 확인에 한정된 것이며, 그 밖의 다른 법률이 적용되는 제품의 경우에는 해당 법률에 따라 추가로 인증·허가 등을 받아야 합니다.

첨 부 (Annex) :
1. 안전관리부품 및 재질목록 (List of Critical Components)
2. 기본모델·파생모델의 내용 (General Descriptions of Certified Products)
3. 전기용품안전인증의 변경 현황 (Status of Certificate Revisions)

□ 첨부 2 : 기본모델 · 파생모델의 내용
General description of Certified Products

파생모델명 Derivative model	기본모델과의 차이점 Differences between the basic and derivative model(s)
2010 T1A 250V	Rated current is different (250V 1A)
2010 T1.25A 250V	Rated current is different (250V 1.25A)
2010 T1.6A 250V	Rated current is different (250V 1.6A)
2010 T2A 250V	Rated current is different (250V 2A)

제품특기사항 및 시험조건
Remarks & Test conditions

1. Test Report Ref. No. : 12-1920-1601 (2012.05.10.)
Review Report Ref. No. : 2012TS00495 (2012.03.15.)

2. Product Description
- 250 V 2.5 A
- Rated breaking capacity : 130 A
- Standard sheet 4

□ 본 제품의 시험내용에 관하여 문의하실 사항이 있으시면 아래 연락처로 문의하시기 바랍니다.
시험 담당자 / 연락처: 디지털산업본부 전기전자기술센터 조인철 / (02)860-1425
□ *If you have any question on product testing, please contact the person below :*
Job holder: Digital Industry Division, Electrics & Electronics Technology Center, INCHUL CHO/+82 2 8601-425

FP511-09-00

□ 첨부 3 : 전기용품안전인증의 변경 현황
Status of Certificate Revisions

변경발급 내용 Contents of Certificate Revisions
Not applicable

FP511-11-00

접 수 번 호 (Receipt No.) : 12-1920-1599

전기용품안전인증서

Electrical Appliances Safety Certificate

안전인증번호 (Certificate No.)	: SU05015-12007
제조업자명 (Factory)	: Suzhou Walter Electronic Co., Ltd.
대표자명 (President)	: Mr. Yen Chun Chang
제조공장의 소재지 (Factory Address)	: Fenhu, Technic Development Zone, Luxu Wu Jiang, Jiangsu, P.R.China
제품명 (Product)	: 퓨즈(Sub-miniature fuse-links)
기본모델명 (Basic Model)	: 2010 T100mA 250V
정격 (Rating)	: 250 V 100 mA, 130 A
파생모델명 (Series Model)	: Not Applicable
적용기준 (Standard)	: K60127-1(2011-12), K60127-3(2006-07)

「전기용품안전 관리법 시행규칙」 제6조제2항에 따라 위의 전기용품에 대하여 안전인증서를 발급합니다.

We Issue Electrical Appliances Safety Certification as above product by Article 6 Section 2 of the Electrical Appliances Safety Control Law Enforcement Regulation.

2012년 05월 09일
year month day

ktl 한국산업기술시험원장
KOREA TESTING LABORATORY

※ 이 인증서는 「전기용품안전 관리법」에 따른 전기용품 안전성 확인에 한정된 것이며, 그 밖의 다른 법률이 적용되는 제품의 경우에는 해당 법률에 따라 추가로 인증·허가 등을 받아야 합니다.

첨부 (Annex) :
1. 안전관리부품 및 재질목록 (List of Critical Components)
2. 기본모델·파생모델의 내용 (General Descriptions of Certified Products)
3. 전기용품안전인증의 변경 현황 (Status of Certificate Revisions)

접 수 번 호 (Receipt No.) : 12-1920-1589

전기용품안전인증서

Electrical Appliances Safety Certificate

안전인증번호 (Certificate No.)	: SU05015-12006
제 조 업 자 명 (Factory)	: Suzhou Walter Electronic Co., Ltd.
대 표 자 명 (President)	: Mr. Yen Chun Chang
제조공장의 소재지 (Factory Address)	: Fenhu, Technic Development Zone, Luxu Wu Jiang, Jiangsu, P.R.China
제 품 명 (Product)	: 퓨즈(Sub-miniature fuse-links)
기 본 모 델 명 (Basic Model)	: 2010 T800mA 250V
정 격 (Rating)	: 250 V 800 mA, 130 A
파 생 모 델 명 (Series Model)	: See the attachment 2
적 용 기 준 (Standard)	: K60127-1(2011-12), K60127-3(2006-07)

「전기용품안전 관리법 시행규칙」 제6조제2항에 따라 위의 전기용품에 대하여 안전인증서를 발급합니다.

We Issue Electrical Appliances Safety Certification as above product by Article 6 Section 2 of the Electrical Appliances Safety Control Law Enforcement Regulation.

2012년 *year* 05월 *month* 09일 *day*

ktl 한국산업기술시험원장

KOREA TESTING LABORATORY

※ 이 인증서는 「전기용품안전 관리법」에 따른 전기용품 안전성 확인에 한정된 것이며, 그 밖의 다른 법률이 적용되는 제품의 경우에는 해당 법률에 따라 추가로 인증·허가 등을 받아야 합니다.

첨 부 (Annex) :
1. 안전관리부품 및 재질목록 (List of Critical Components)
2. 기본모델·파생모델의 내용 (General Descriptions of Certified Products)
3. 전기용품안전인증의 변경 현황 (Status of Certificate Revisions)

□ 첨부 2 : 기본모델 · 파생모델의 내용
General description of Certified Products

파생모델명 Derivative model	기본모델과의 차이점 Differences between the basic and derivative model(s)
2010 T125mA 250V	Rated current is different (250V 125mA)
2010 T160mA 250V	Rated current is different (250V 160mA)
2010 T200mA 250V	Rated current is different (250V 200mA)
2010 T250mA 250V	Rated current is different (250V 250mA)
2010 T315mA 250V	Rated current is different (250V 315mA)
2010 T400mA 250V	Rated current is different (250V 400mA)
2010 T500mA 250V	Rated current is different (250V 500mA)
2010 T630mA 250V	Rated current is different (250V 630mA)

제품특기사항 및 시험조건
Remarks & Test conditions

1. Test Report Ref. No. : 12-1920-1589 (2012.05.10.)
   Review Report Ref. No. : 2012TS00496 (2012.03.15.)

2. Product Description
   - 250 V 800 mA
   - Rated breaking capacity : 130 A
   - Standard sheet 4

□ 본 제품의 시험내용에 관하여 문의하실 사항이 있으시면 아래 연락처로 문의하시기 바랍니다.
시험 담당자 / 연락처: 디지털산업본부 전기전자기술센터 조인철 / (02)860-1425
□ *If you have any question on product testing, please contact the person below :*
Job holder: Digital Industry Division, Electrics & Electronics Technology Center, INCHUL CHO/+82 2 8601-425

FP511-09-00

□ 첨부 3 : 전기용품안전인증의 변경 현황
Status of Certificate Revisions

변경발급 내용 Contents of Certificate Revisions
Not applicable

FP511-11-00