RoHS

REV.	ECN No.	MODIFIED MARK	DESIGN	DATE
A0	————	初版发行	L.Q.Guo	2022.06.14

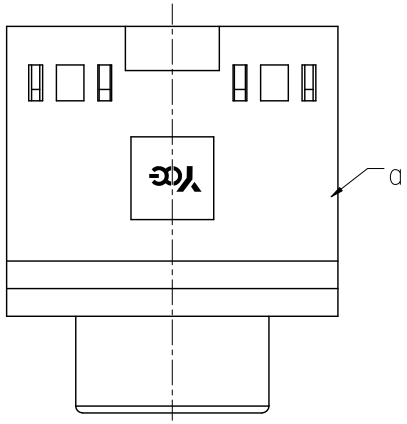

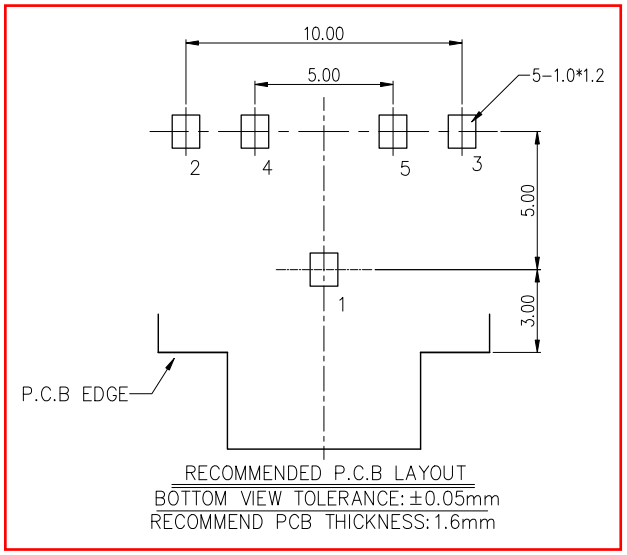

RECOMMENDED P.C.B LAYOUT
BOTTOM VIEW TOLERANCE: ±0.05mm
RECOMMEND PCB THICKNESS: 1.6mm

NOTES:
1.ELECTCAL CHARACTERISTICS:
1-1.CONTACT CURRENT RATING: 1A.
1-2.CONTACT VOLTAGE RATING: 12V DC.
1-3.CONTACT RESISTANCE: 30 MILLIOHMS MAX.
1-4.DIELECTRIC WITHSTANDING VOLTAGE: 500V AC.
1-5.INSULATION RESISTANCE: 100 MEGOHMS MIN.AT DC 500V.
2.MECHANICAL CHARACTERISTICS:
2-1.DURABILITY: 5000 CYCLES.
2-2.INSERTION AND EXTRACTION FORCE: 3N～30N.
3.ENVIRENMENT CHARACTERISTICS:
3-1.OPERATING TEMPERATURE.-40℃～+85℃
3-2.HUMIDTY: 45～85% RH.
4.REMARK:
4-1.**插口口径** ø3.60±0.04 -JIS. see page. 10.

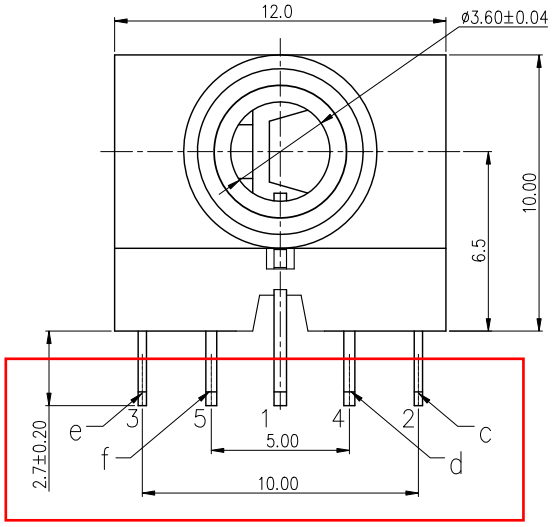

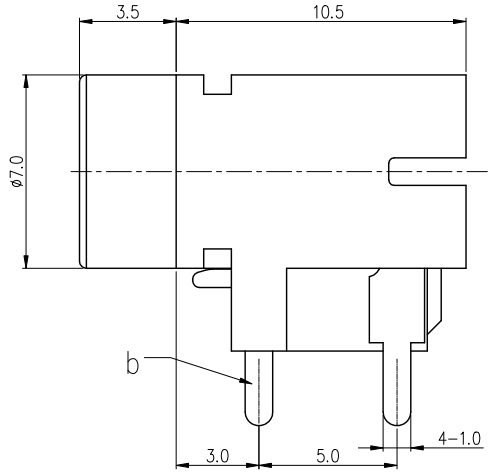

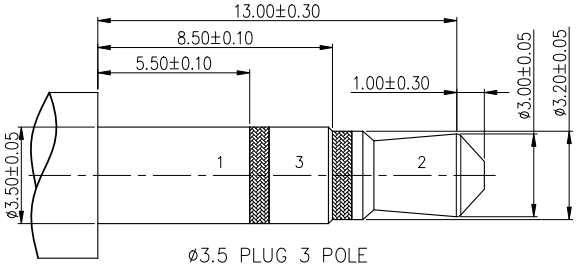

ø3.5 PLUG 3 POLE

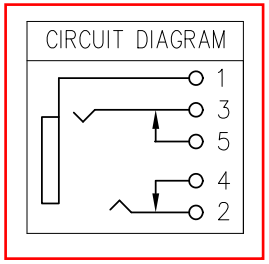

No.	PART NAME	TER'No.	Q'ty	MATERIAL	PLATING & COLOR	REMARK
f	TERMINAL 5	5	1	H62 t=0.40	Ag-Plated	RoHS COMPLIANT
e	TERMINAL 3	3	1	QSn6.5-0.1 t=0.30	Ag-Plated	
d	TERMINAL 4	4	1	H62 t=0.40	Ag-Plated	
c	TERMINAL 2	2	1	QSn6.5-0.1 t=0.30	Ag-Plated	
b	TERMINAL 1	1	1	H62 t=0.45	Ag-Plated	
a	HOUSING		1	PBT UL94 V-0	GREEN(577C)	

UNLESS OTHERWISE SPECIFIED TOLERANCES	SCALE: N/A	SIZE: A4	VIEW:	MODEL TYPE: PHONE JACK ø3.5
	UNIT: mm	REV.: A0	SHEET: 1/1	
TOL TABLE: X. : ±0.38 X.° :±5° X.X : ±0.30 X.X° :±3° X.XX: ±0.25 X.XX°:±2°	DSND L.Q.Guo	DATE 2022.06.14	PART No: CKX3.5178-02	
	CHKD Y.X.Wang	DATE 2022.06.14		
	APVD E.L.Gu	DATE 2022.06.14	DWN. No.: RD01-***	
DRAWING: CUSTOMER	YONG CHENGGONG ELECTRONICS CO., LTD.			