	Thick Film High Voltage Lead-Free Chip Resistors Halogen-Free	Document No.	TRH-XX5G044A
		Revise Date	2019/08/01
		page number	1/10

1. Scope :

This specification applies for thick film high voltage Lead-Free chip resistors made by TA-I.

2. Construction:

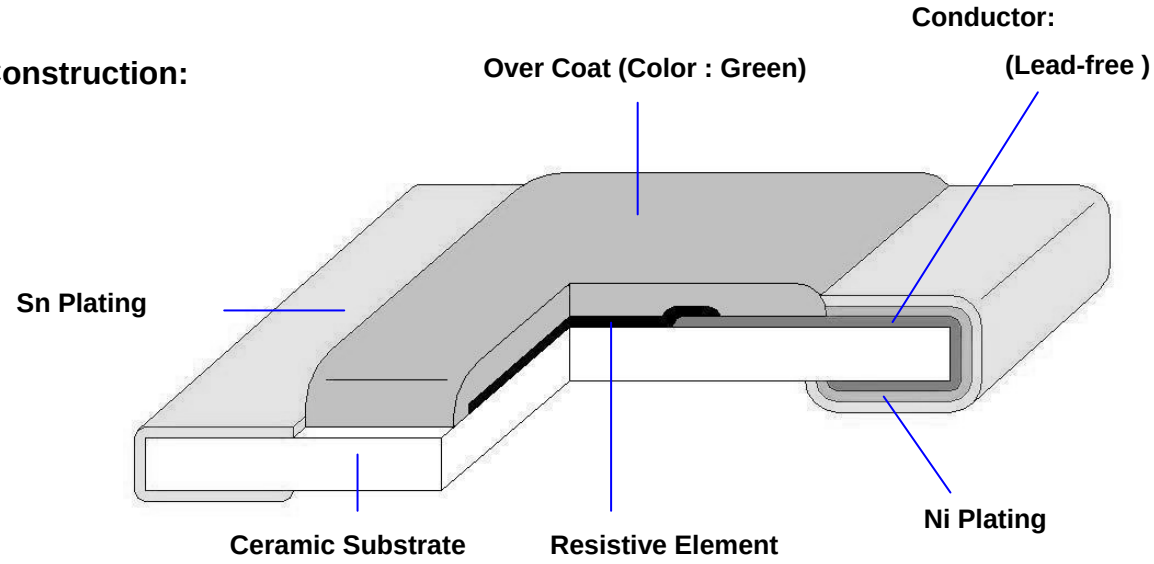

3. Type Designation:

RH	12	F	TN	4993
Product Code RH : High voltage	Size Power Rating	Tolerance	Packaging	Nominal Resistance
06-0603(1608) 1/10W 10-0805(2012) 1/8W 12-1206(3216) 1/4W	J- ±5% G- ±2% F- ±1%	T- Paper Tape N- Lead Free	3 digits, e.g.: (E-24) 104 = 100kΩ 4 digits, e.g.,: (E-96) 4993 = 499kΩ	

4. Dimensions:

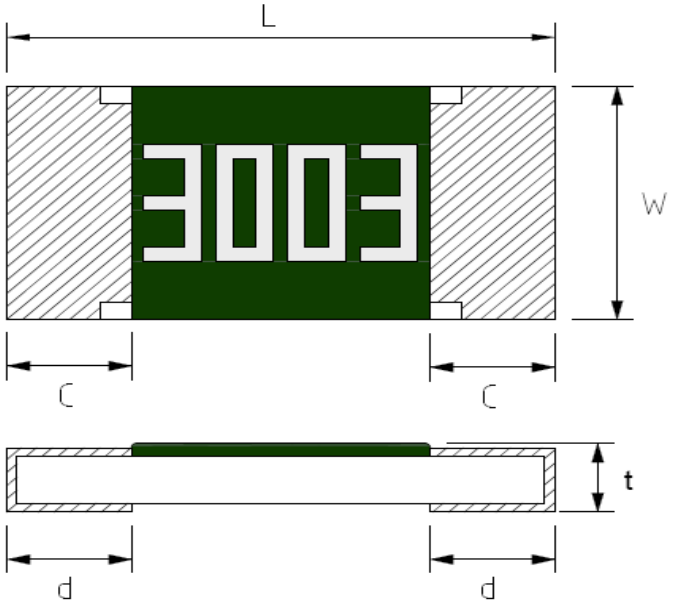

UNIT: mm

Type	L	W	C	d	t
RH06	1.60±0.10	0.80±0.10	0.30±0.20	0.30 +0.2 -0.1	0.45±0.10
RH10	2.00 ±0.10	1.25 ±0.10	0.35 ±0.20	0.40 ±0.20	0.50 ±0.10
RH12	3.10 ±0.20	1.55 ±0.10	0.40 ±0.25	0.40 ±0.20	0.55 ±0.10

5. Ratings & Characteristics :

Characteristics	Rating voltage	Feature			Measurement Method
		RH06	RH10	RH12	
Power Ratings (W)	Refer 5.2	1/10W	1/8W	1/4W	JIS Code 3A / JIS Code 3D
Resistance Value (Ω)		47Ω~10MΩ		47Ω~ 27MΩ	Refer to JIS C 5201-1-4.5
Resistance Value (Ω)		100KΩ~10MΩ		100KΩ~ 27MΩ	(RH series meet the IEC62368)
T.C.R (ppm/°C)		±200			Refer to JIS C 5201-1-4.8
Operation Temperature Range (°C)		-55 ~ +155			
Resistance Tolerance (%)		±1, ±2, ±5			JIS C 5201-1-4.2.5
Maximum Working Voltage (V)		350	400	500	
Maximum Overload Voltage (V)		500	800	1000	

Note : Except for the above standardized products, we also provide the customized products.

5.1 Derating Curve :

For resistors operated at ambient temperature over 70℃ , power rating shall be derated in accordance with figure 1.

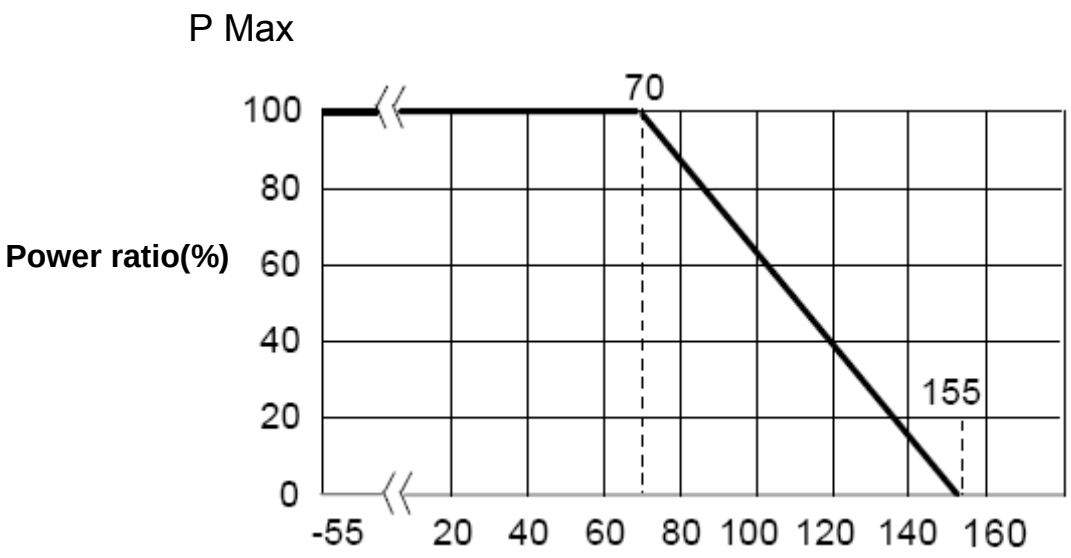

Figure 1

5.2 Rated Voltage:

The rated voltage is calculated by the following formula:

$E=\sqrt{P*R}$

E=Rated Voltage(V)
P=Rated Power(W)
R=Resistance Value(Ω)

E.G. : What is RH12FTN3003 the rated voltage ?

RH12FTN3003 P=1/4W ; R:3003=300KΩ=300,000Ω

$E=\sqrt{1/4(W)*300000\,(\Omega)}$ = 273.86 V

Remark : However , it shall not exceed the maximum rated voltage .

6. Reliability Tests:

Test Items	Reference standard	Condition of Test	Test Limits
Visual examination		Checked by visual examination .	The marking shall be legible , as checked by visual examination
Temperature Coefficient of Resistance	IEC60115-1-4.8 JIS-C5201-1-4.8	-55 ~ +125 ℃	Refer to paragraph 5
Dielectric Withstanding Voltage (Voltage Proof)	IEC60115-1-4.7 JIS-C5201-1-4.7	500Va. c., voltage , 1 min . (Remark : RH06 300V)	No abnormalities such as flashover , burning dielectric breakdown shall appear .
Insulation Resistance	IEC60115-1-4.6 JIS-C5201-1-4.6	100V voltage , 1 min .	≧1GΩ
Solderability	IEC60115-1-4.17 JIS-C5201-1-4.17	245 ±5℃ solder, 2 ±0.5 sec dwell. Solder : Sn96.5/Ag3/Cu0.5	At least 95% of surface area of electrode shall be covered with new solder.
Short Time Overload	IEC60115-1-4.13 JIS-C5201-1-4.13	2.5 × rated voltage, 5s	RH06:±(2.0%+0.05Ω) RH12:±(1.0%+0.05Ω) Remark : (RH10) 1% : ±(1.0%+0.05Ω) 5% : ±(2.0%+0.05Ω)
Resistance to Soldering Heat	IEC60115-1-4.18 JIS-C5201-1-4.18	270 ±5℃ solder , 10 ±1 sec dwell .	±(1.0%+0.05Ω)
Rapid Change of Temperature	IEC60115-1-4.19 JIS-C5201-1-4.19	-55℃ (30 min.) / +155 ℃(30 min.) 5 cycles	±(1.0%+0.05Ω)
Load Life	IEC60115-1-4.25.1 JIS-C5201-1-4.25.1	1000 hours at rated power , 70℃ , 1.5hours "ON ", 0.5hour "OFF"	RH06:±(3.0%+0.05Ω) RH12:±(5.0%+0.1Ω) Remark : (RH10) 1%: ±(1.0%+0.1Ω) 5%: ±(3.0%+0.1Ω)
Load Life with Humidity	IEC60115-1-4.24 JIS-C5201-1-4.24	1000 hours at rated voltage , 40±2℃, 90~95% RH 1.5hours "ON ", 0.5hour "OFF"	RH06:±(3.0%+0.05Ω) RH12:±(5.0%+0.1Ω) Remark : (RH10) 1%: ±(1.0%+0.1Ω) 5%: ±(3.0%+0.1Ω)
Robustness of Termination (Bending)	IEC60115-1-4.33 JIS-C5201-1-4.33	3mm deflection	±(1.0%+0.05Ω) Remark : (RH10) 1%: ±(0.5%+0.05Ω) 5%: ±(1.0%+0.05Ω)

7. Marking

7.1 ±2% , ±5% (E24) : RH06 / RH10 / RH12

Resistance value is expressed by 3 digits, the first two digits represent the significant figures of nominal resistance value in Ω, and the third digit represents exponent for base of 10.

Ex. 106 =10×10^{6}=10000000Ω=10MΩ

7.2 ±1% (E96) : RH10 / RH12

Resistance value is expressed by 4digits, the first three digits represent the significant figures of nominal resistance value in Ω, and the fourth digit represents exponent for base of 10.

Ex. 4993 =499×10^{3} =499000Ω=499KΩ

7.3 ±1% (E96) : RH06

When the marking space is too small in such small-sized resistors as RH06, the marking can not made by 4 digits and may be made by two digits combined with one English capital.

Symbol for E96 series nominal resistance value

Symbol	E96	Symbol	E96	Symbol	E96	Symbol	E96
01	100	25	178	49	316	73	562
02	102	26	182	50	324	74	576
03	105	27	187	51	332	75	590
04	107	28	191	52	340	76	604
05	110	29	196	53	348	77	619
06	113	30	200	54	357	78	634
07	115	31	205	55	365	79	649
08	118	32	210	56	374	80	665
09	121	33	215	57	383	81	681
10	124	34	221	58	392	82	698
11	127	35	226	59	402	83	715
12	130	36	232	60	412	84	732
13	133	37	237	61	422	85	750
14	137	38	243	62	432	86	768
15	140	39	249	63	442	87	787
16	143	40	255	64	453	88	806
17	147	41	261	65	464	89	825
18	150	42	267	66	475	90	845
19	154	43	274	67	487	91	866
20	158	44	280	68	499	92	887
21	162	45	287	69	511	93	909
22	165	46	294	70	523	94	931
23	169	47	301	71	536	95	953
24	174	48	309	72	549	96	976

Symbol for multipliers

Symbol	A	B	C	D	E	F	G	H	X	Y	Z
multipliers	10^0	10^1	10^2	10^3	10^4	10^5	10^6	10^7	10^{-1}	10^{-2}	10^{-3}

E.G : 01A = $100 \times 10^0 = 100\,\Omega$



Notes :

When the resistance value is not in the list of E96 , 3 digitals with underline in E-24 series is used as mark .

E.G. : 0603 , 120Ω , 1% Marking is 121



8. Taping & Reel

8.1 Taping Dimensions

8.1.1 4 mm pitch paper

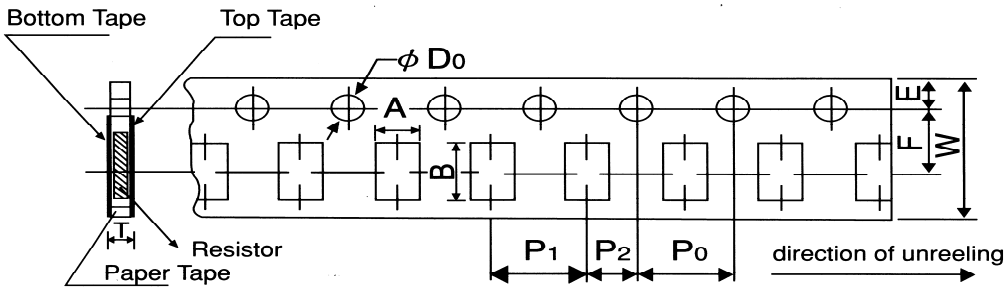

UNIT: mm

Packing	Type	A	B	W	F	E	P_1	P_2	P_0	D_0	T
Paper Tape	RH06	1.1±0.1	1.9±0.1	8.0±0.2	3.5±0.05	1.75±0.1	4.0±0.1	2.0±0.05	4.0±0.1	ϕ 1.5 +0.1 -0	0.64±0.1
	RH10	1.6±0.15	2.4±0.2								0.84±0.1
	RH12	2.0±0.15	3.6±0.2								

Type series		Paper Tape
		4 mm pitch
		178mm/R
RH	06	5000
RH	10	
RH	12	

8.2 Reel Specifications

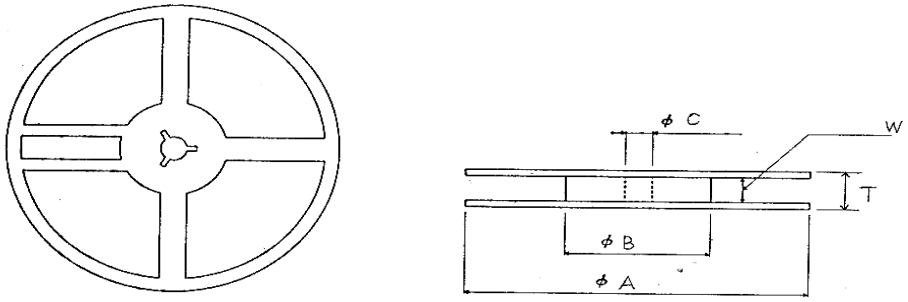

UNIT: mm

Type	ϕ A	ϕ B	ϕ C	W	T
RH06/ 10 / 12	178 ±2.0	60.0±1.0	13.0 ±1.0	9.0 ±1.0	11.5 ±1.0

8.3 Peel –off force :

Peel –off force of paper and blister tape is in accordance with “JIS-C5202”

that is , 0.1 to 0.7 N at a peel-off speed of 300 mm / minute.

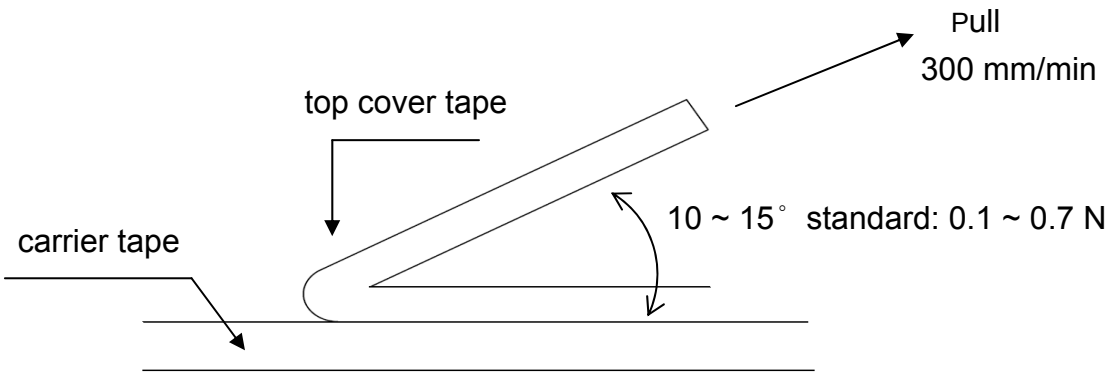

9. Label

9.1 Manufacture Label :

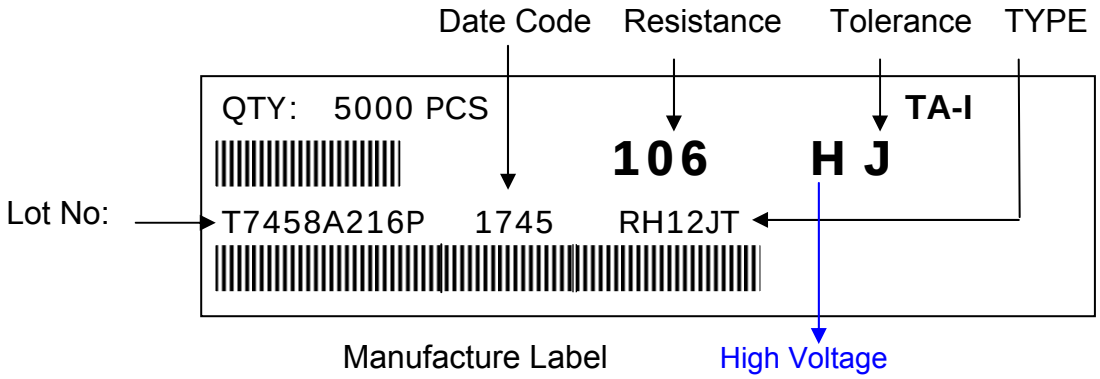

9.2 Customer Label (By customer request) :

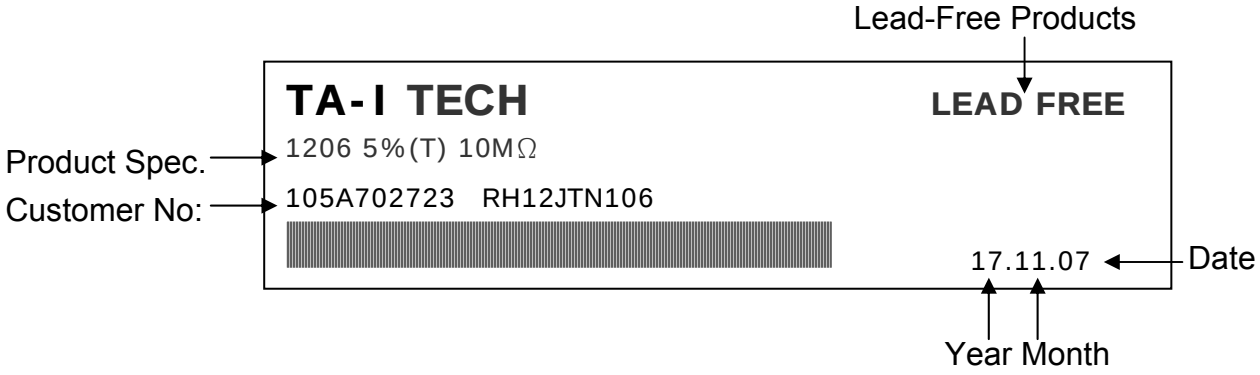

10. Recommended land patterns

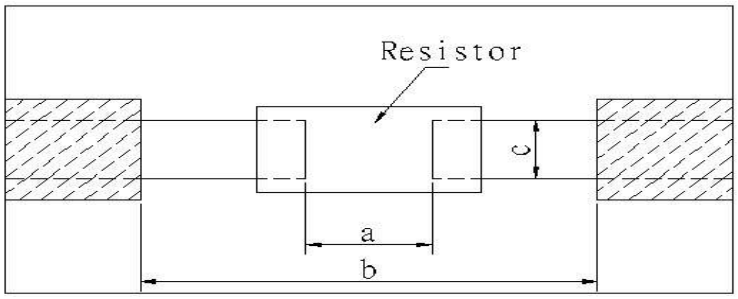

Land pattern / Type	Size	Dimension (mm) a	b	c
RH	06 (0603)	0.7~0.9	2.0~2.2	0.8~1.0
RH	10 (0805)	1.0~1.4	3.2~3.8	0.9~1.4
RH	12 (1206)	2.0~2.4	4.4~5.0	1.2~1.8

11. Recommend IR – Reflow profile : (solder : Sn96.5 / Ag3 / Cu0.5)

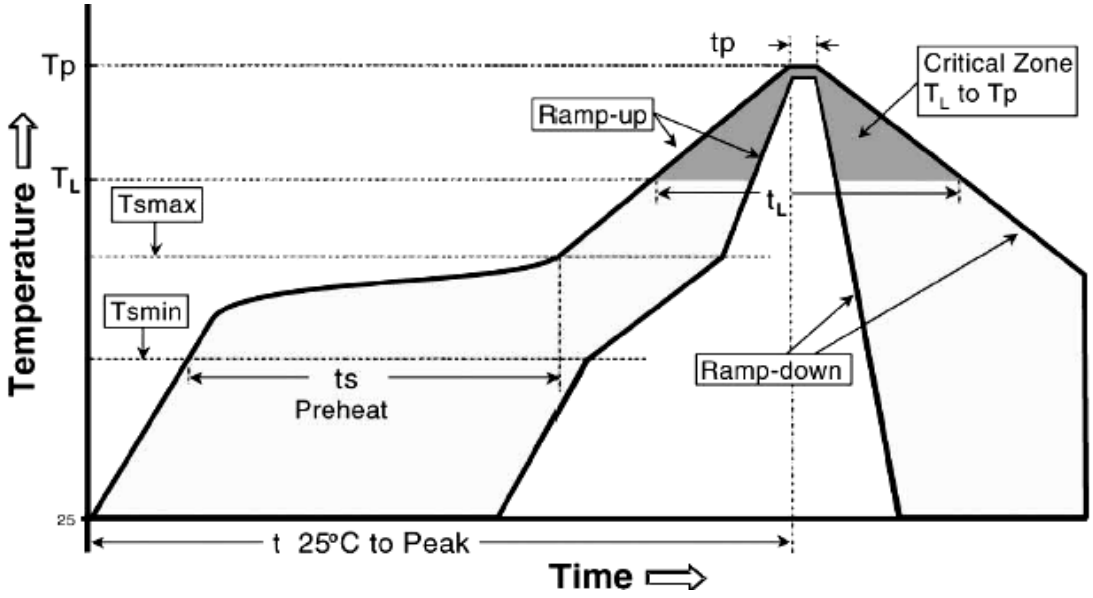

Profile Feature	Lead (Pb)-Free Assembly
Average ramp-up rate (Tsmax to Tp)	3℃ / second max.
Preheat - Temperature Min (Ts_{min}) - Temperature Max (Ts_{max}) - Time (Ts_{min} to Ts_{max}) (ts)	150℃ 200℃ 60 -150 seconds
Time maintained above : - Temperature (T_L) - Time (T_L)	217℃ 60-120 seconds
Peak Temperature (Tp)	260℃
Time within $^{+0}_{-5}$℃ of actual Peak Temperature $(tp)^2$	10 seconds
Ramp-down Rate	6℃/second max.
Time 25℃ to Peak Temperature	8mimutes max.

Allowed Re-flow times : 3 times

Remark : To avoid discoloration phenomena of chip on terminal electrodes, please use N2 Re-flow furnace .

12. Storage Conditions:

Temperature: 5℃~35℃,Humidity:40%~75%

13. Shelf Life:

2 years from manufacturing date.

14. ECN

Engineering Change Notice: The customer will be informed with ECN if there is significant modification on the characteristics and materials described in Approval Sheet.

15. Manufacturing Country & City :

TA-I TECHNOLOGY CO., LTD. (Taiwan– Tao Yuan)
Tel: 886-3-3246169 Fax : 886-3-3246167

Associated companies :

(1) FORTUNE TASK RESISTOR FACTORY (China – Dongguan)
Tel : 86-769-8339-4790～3 Fax : 86-769-8339-4794

(2) TA-I TECHNOLOGY (DONGGUAN) CO., LTD. (China –Dongguan)
Tel : 86-769-8339-4790～3 Fax : 86-769-8339-4794

(3) TA-I TECHNOLOGY (SU ZHOU) CO., LTD. (China – Su Zhou)
Tel :86- 512-63457879 Fax : 86-512-63457869

(4) TAI OHM ELECTRONICS (M) SDN. BHD. (Malaysia – Penang)
Tel :604- 3900480 Fax : 604-3901481

(5) P.T.TAI ELECTRONICS Indonesia (Indonesia – Jakarta)
Tel :62-21-89830123 Fax : 62-21-89830703