Dwg. No. :A15-0180
承認字號
Issued Date: 2015/1/31

Customer : Qisda (Suzhou) Co . , Ltd.
(客　戶)

Part No. :
(貴公司料號)

SPECIFICATION FOR APPROVAL
承　認　書

Description : ALUMINUM ELECTROLYTIC CAPACITORS
(零 件 名 稱)

Lelon Series : RGA Series
(立 隆 系 列)

Lelon Part No.: RGA101M1ASA-0511G Weight：0.4486g
(立 隆 料 號)

LELON ELECTRONICS CORP.
立 隆 電 子 工 業 股 份 有 限 公 司

Headquarters
20, Lane 51, Chenggong Rd., Dali District, Taichung City, Taiwan
TEL: +886-4-24925858 FAX: +886-4-24922768

Manufacturing Sites

☐ Lelon Electronics Corp.
20, Lane 51, Chenggong Rd, Dali District, Taichung City, Taiwan
TEL: +886-4-24925858 FAX: +886-4-24922768

■ Lelon Electronics (Huizhou) Co., Ltd.
Taiyang Industrial Zone, Baihua Town, Huidong County, Huizhou City, Guangdong, China
TEL: +86-752-8768222 FAX: +86-752-8768199

■ Lelon Electronics (Suzhou) Co., Ltd.
1220, Zhongshan North Rd., Songling Town, Wujiang City, Jiangsu, China
TEL: +86-512-63457588 FAX: +86-512-63457791

Approval 核 准	Check 確 認	Design 作 成
研發部 JAN 31 2015 蕭正浩	研發部 JAN 31 2015 陳 筱	研發部 JAN 31 2015 朱玉芳

Approval Signatures
貴公司承認印

Please Return One Copy with Your Approval
承 認 後 請 寄 回 本 圖 一 份

Part Numbering System

Product Code Guide – Radial Type

REA series	10μF	±20%	50V	Lead Forming Tape	Gas Type	5φ×11L	Pb-free Wire + PET Sleeve	
REA	**100**	**M**	**1H**	**TA**	**-**	**0511**		
□□□	□□□	□	□□	□□	□	□□□□	□	
①	②	③	④	⑤	⑥	⑦	⑧	⑨
Series	Capacitance	Capacitance Tolerance	Rated Voltage	Lead Configuration & Package	Rubber Type	Case size	Lead Wire and Sleeve Type	Supplement Code

① Series:

Series is represented by a three-letter code. When the series name only has two letters, use a hyphen, "-", to fill the third blank.

② Capacitance:

Capacitance in μF is represented by a three-digit code. The first two digits are significant and the third digit indicates the number of zeros following the significant figure. "R" represents the decimal point for capacitance under 10μF.

Example:

Capacitance	0.1	0.47	1	4.7	10	47	100	470	1,000	4,700	10,000
Part number	0R1	R47	010	4R7	100	470	101	471	102	472	103

③ Tolerance:

J = -5% ~ +5%	K = -10% ~ +10%	M = -20% ~ +20%	V = -10% ~ +20%

④ Rated voltage:

Rated voltage in volts (V) is represented by a two-digit code

Voltage (WV)	2.5	4	6.3	10	16	20	25	35	50	63	80	100
Code	0E	0G	0J	1A	1C	1D	1E	1V	1H	1J	1K	2A
Voltage (WV)	160	200	250	315	350	400	420	450	500	525		
Code	2C	2D	2E	2F	2V	2G	2P	2W	2H	2Y		

⑤ Lead configuration and package:

BK = Bulk Package	TA = Formed Lead Taping
FC = Formed & Cut Lead	SA = Straight Lead Taping
CC = Cut Lead	SD = Bent Cathode Lead
SF = Snap-in & Formed Cut Lead	BC = Bent & Cut Lead (Leads in Right Direction)
SC = Snap-in & Cut Lead	BU = Bent & Cut Lead (Leads in Left Direction)

⑥ Rubber type:

– = Gas escape type	F = Flat rubber bung

Note : For case size of 3φ×5L, 12.5φ×16L, 16φ×16L, 16φ×20L, 18φ×16L, 18φ×20L , 18φ×25L of aluminum e-caps, flat rubber bung is the standard design, In these cases, use a hyphen, "-", in this digit.

⑦ Case size:

The first two digits indicate case diameter and the last two digits indicate case length in mm.

φD×L	3×5	4×5	4×7	5×5	5×7	5×11	6.3×5	6.3×7	6.3×11	6.3×15
Code	**0305**	**0405**	**0407**	**0505**	**0507**	**0511**	**0605**	**0607**	**0611**	**0615**
φD×L	8×5	8×7	8×9	8×11.5	8×15	8×20	10×9	10×12.5	10×16	10×20
Code	**0805**	**0807**	**0809**	**0811**	**0815**	**0820**	**1009**	**1012**	**1016**	**1020**
φD×L	10×25	10×30	10×35	10×40	10×45	10×50	12.5×16	12.5×20	12.5×25	12.5×30
Code	**1025**	**1030**	**1035**	**1040**	**1045**	**1050**	**1316**	**1320**	**1325**	**1330**
φD×L	12.5×35	12.5×40	12.5×45	12.5×50	16×16	16×20	16×25	16×31.5	16×35.5	16×40
Code	**1335**	**1340**	**1345**	**1350**	**1616**	**1620**	**1625**	**1632**	**1636**	**1640**
φD×L	16×45	16×50	18×16	18×20	18×25	18×31.5	18×35.5	18×40	18×45	18×50
Code	**1645**	**1650**	**1816**	**1820**	**1825**	**1832**	**1836**	**1840**	**1845**	**1850**
φD×L	20×30	20×35	22×35	22×40	22×45	25×40	25×45			
Code	**2030**	**2035**	**2235**	**2240**	**2245**	**2540**	**2545**			

Note: When a case size is required and not shown in the table, please contact with us for further discussion.

⑧ Lead Wire and Sleeve Type:

None = Standard design Pb-free wire + PET sleeve (aluminum e-cap) Pb-free wire + Coating case (OP-CAP)	T = Sn-Pb wire + PET sleeve
B = Sn-Bi wire + PET sleeve	G = Pb-free wire + Black PET sleeve (for RGA & SG series only)
K / L = Automotive control code	P = Pb-free wire + PET sleeve

* When a supplement code following a blank digit code of lead wire and sleeve type (standard design), use a hyphen, "-", to fill the blank digit.

* When the automotive control code is required, please contact with us for further discussion.

⑨ Supplement code (Optional):

For special control purposes

Lelon P/N： RGA101M1ASA-0511G	LELON ELECTRONICS CORP. RGA 100 μF / 10 V – 5φ× 11L	Page：1 / 1

CUSTOMER : Qisda (Suzhou) Co . , Ltd.

CUSTOMER P/N: 0J.10711.08V

DIAGRAM OF DIMENSIONS

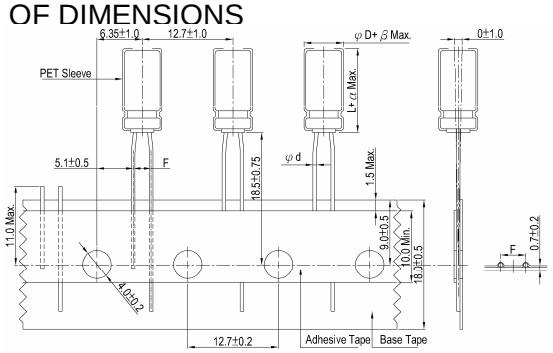

Unit: mm

φD	5
L	11
F	2.5
φd	0.5
α	1.5
β	0.5

Items	Performance
Category Temperature Range	-40℃ ~ +105℃
Capacitance Tolerance	-20 % ~ +20 % (120 Hz, 20℃)
Surge Voltage	13 VDC
Leakage Current	I ≦ 10 μA After 2 minutes
Tan δ	≦ 0.20 (120 Hz, 20℃)
Ripple Current (rms)	139 mA (120 Hz, 105℃)

Low Temperature Characteristics (120 Hz)

Z(-25℃)/Z(+20℃)	3
Z(-40℃)/Z(+20℃)	6

Ripple Current & Frequency Multipliers

Frequency (Hz)	60 (50)	120	500	1k	10k up
Multiplier	0.70	1.00	1.30	1.40	1.50

Ripple Current & Temperature Multipliers

Temperature (℃)	40℃	60℃	70℃	85℃	105℃
Multiplier	2.5	2.2	2.0	1.8	1.0

Life Test:

Endurance:

After 2000 Hrs at 105℃

Shelf Life Test:

After 1000 Hrs at 105℃

Capacitance Change	Within ±20 % of initial value
Tan δ	Less than 200% of specified value
Leakage Current	Within specified value

Solder Heat-resistance	Dip of wave soldering capacitors should be less than 260±5℃, 10±1seconds.
Standards	JIS C 5101-4
Remarks	RoHS Compliance & Halogen-free

* Please refer to " Precautions and Guidelines for Aluminum Electrolytic Capacitors " of Lelon's catalog.

Publish Date	January 31, 2015	Approval Signatures:	Approved	Checked	Designed
Revise Date			研發部 JAN 31 2015 蕭正浩	研發部 JAN 31 2015 陳 筱	研發部 JAN 31 2015 朱玉芳
Edition No.	1	Please return one copy with your approval			

Diagram of Dimensions:

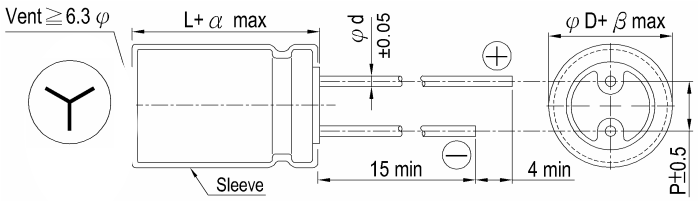

Lead Spacing & Diameter Unit: mm

φD	5	6.3	8	10	12.5	16	18	22	25
P	2.0	2.5	3.5	5.0	5.0	7.5	7.5	10	12.5
φd	0.5		0.6			0.8		1.0	
α	L＜20: 1.5, L≧20: 2.0							2.0	
β	0.5								

The case size of 12.5×16, 16×16, 16×20, 18×16, 18×20 and 18×25 are suitable for below diagram:

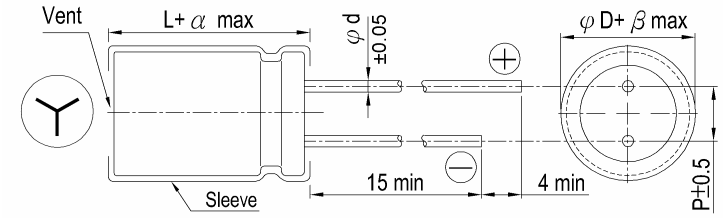

Marking:

Each capacitor shall be marked with the following information.

(The Front)

120μF 450V → Rated capacitance and rated DC working voltage

— — → Polarity

(The Back)

Lelon → Brand name

RGA 105℃ → Series & maximum operating temperature

H 4 01 (M) → Date code

- Tolerance of capacitance
- Week of manufacture
- The last digit of A. D.
- Place of manufacture
  - T: Taiwan
  - H: Huizhou
  - A: Suzhou

Appearance:

Marking color: White

Sleeve color: Black -------- RGA Series

Sleeve material: PET

Packing Quantity:

2. Radial Type in Taping Pack:

Inner Box of Ammo Pack:

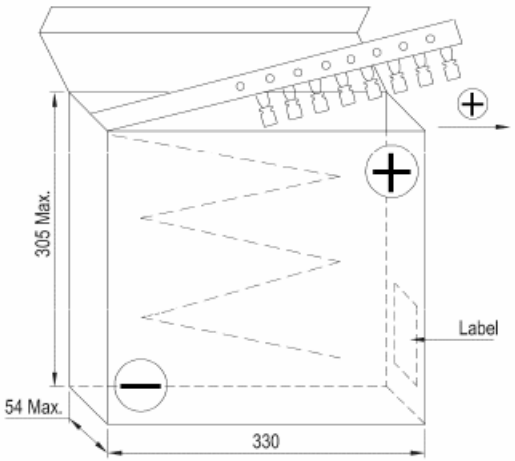

Unit: mm

φD	TA, SA
3	3,000
4	2,000
5	2,000
6.3	2,000
8	1,000
10φ × 8 ~ 30L	500
10φ × 35 ~ 50L	250
12.5	300

NOTE: (1) Above quantities are principle. Some difference may be provided.
(2) The component shall be orient on the tape as such that the positive lead is leading or the negative lead is leading with customer's request.

Packing Figure:

a) Outer Box

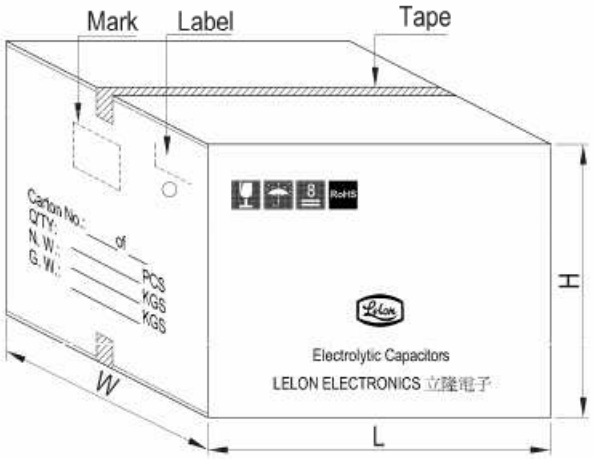

Case Size	L	W	H
3 ~ 4φ	427	345	230
5φ	491	345	275
6.3φ	597	349	294
8φ	491	345	275
10φ× 8 ~ 30L	412	358	303
10φ× 35 ~ 50L	210	358	405
12.5φ× 16 ~ 40L	597	349	294

b) Label



Endurance Characteristic:

No.	Item	Conditions	Specification	
1	Rotational Temperature Test	Capacitor is placed in an oven whose temperature follow specific regulation to " +25℃ (3 min.) → -40℃ / -25℃ (30 min.) → +25℃ (3 min.) → +105℃ (30 min.) →+25℃ (3 min.)", and it is called a cycle. The test totals 50 cycles. And then the capacitor shall be subjected to standard atmospheric conditions for 4 hours, after which measurements shall be made. 6.3 ~ 400V: -40℃; 450V: -25℃	Capacitance change	Within ± 10% of initial value.
			Tanδ	Within specified value
			Leakage Current	Within specified value
			Physical	No broken and undamaged
2	High Temperature Endurance Life Test	1. Capacitors shall be placed in oven with application of ripple current and rated voltage for 2000 +72 / -0 hours at 105℃. 2. The capacitor should be used within specified permissible ripple current in each standard products table (the sum of DC voltage and AC peak voltage shall be equal to the rated DC working voltage). 3. The specified maximum permissible ripple current in defined at 105℃ and 120Hz (unless otherwise specified). 4. Then the capacitor shall be subjected to standard atmospheric conditions for 4 hours, after which measurements shall be made.	Capacitance change	Within ± 20% of initial value.
			Tanδ	Less than 200% of specified value
			Leakage Current	Within specified value
			Physical	No broken and undamaged
3	High Temperature Unload Life Test	After 1000 +48 / -0 hours test at 105℃ without rated working voltage. And then the capacitor shall be subjected to standard atmospheric conditions for 4 hours, after which measurements shall be made The rated voltage shall be applied to the capacitors before the measurenments for 160 ~ 450V (Refer to JIS C 5101-4 4.1)	Capacitance change	Within ± 20% of initial value.
			Tanδ	Less than 200% of specified value
			Leakage Current	Within specified value
			Physical	No broken and undamaged
4	Humidity Test	Capacitors shall be exposed for 1000 +48 / -0 hours in an atmosphere of 90% ~ 95% R. H. at 60 ± 3℃ And then the capacitor shall be subjected to standard atmospheric conditions for 4 hours, after which measurements shall be made.	Capacitance change	Within ± 10% of initial value.
			Tanδ	Less than 120% of specified value
			Leakage Current	Within specified value
			Physical	No broken and undamaged
5	Low Temperature Test	Capacitors are placed at -40 / -25 ±3℃ for 96 ± 4 hours. And then the capacitor shall be subjected to atmospheric conditions for 4 hours, after which measurements shall be made. 6.3 ~ 400V: -40℃; 450V: -25℃	Capacitance change	Within ± 10% of initial value.
			Tanδ	Within specified value
			Leakage Current	Within specified value
			Physical	No broken and undamaged
6	Vibration Test	1. Fix it at the point 4mm or less form body. For ones of 12.5mm or more in diameter or 25 mm or more length, use separate fixture. 2. Direction and during of vibration: 3 orthogonal directions mutually each for 2 hours (total of 6 hours). 3. Frequency: 10 to 55 Hz reciprocation for 1min. 4. Total amplitude: 1.5mm	Capacitance change	Within ± 10% of initial value.
			Tanδ	Within specified value
			Leakage Current	Within specified value
			Physical	No broken and undamaged
7	Solder Heat-Resistance Test	The section of lead below 4mm form the body of capacitor must be immersed in 260 ± 5℃ liquid tin 10 ± 1 seconds, than, after removing the following specifications shall be satisfied when capacitor terminal is restored to 20℃ over 4 hours.	Capacitance change	Within ± 10% of initial value.
			Tanδ	Within specified value
			Leakage Current	Within specified value
			Physical	No broken and undamaged

<table>
<tr><th>No.</th><th>Item</th><th>Conditions</th><th colspan="2">Specification</th></tr>
<tr><td>8</td><td>Surge Voltage Test</td><td rowspan="2">The capacitor shall be subjected to 1000 cycles at 15 ~ 35℃. Protective series resistor a 1KΩ each consisting of a charge period of 30 ± 5 seconds, followed by discharge period of approximately 5.5 minutes.

Applying voltage:
<table>
<tr><td>Rated Voltage(V)</td><td>6.3</td><td>10</td><td>16</td><td>25</td><td>35</td><td>50</td><td>63</td><td>100</td></tr>
<tr><td>Surge Voltage(V)</td><td>7.2</td><td>11.5</td><td>18.4</td><td>28.8</td><td>40.3</td><td>57.5</td><td>72.5</td><td>115</td></tr>
<tr><td>Rated Voltage(V)</td><td>160</td><td>200</td><td>250</td><td>350</td><td>400</td><td>450</td><td></td><td></td></tr>
<tr><td>Surge Voltage(V)</td><td>184</td><td>230</td><td>288</td><td>385</td><td>440</td><td>495</td><td></td><td></td></tr>
</table></td><td>Capacitance change</td><td>Within ± 20% of initial value.</td></tr>
<tr><td></td><td></td><td>Tanδ</td><td>Less than 175% of specified value</td></tr>
<tr><td></td><td></td><td></td><td>Leakage Current</td><td>Within specified value</td></tr>
<tr><td></td><td></td><td></td><td>Physical</td><td>No broken and undamaged</td></tr>
<tr><td>9</td><td>Mechanical Characteristics Test</td><td colspan="3">1. The test is about lead tabs strength.
2. Tension Test:
The lead tabs shall not be broken or any malformed condition after fixing capacitor vertically and pressing the following weight on the lead tabs of capacitor for 10 ± 1 secs.
<table>
<tr><th>Lead tabs diameter (mm)</th><th>Weight (Kg)</th></tr>
<tr><td>≦ 0.5</td><td>0.5</td></tr>
<tr><td>0.6 ~ 0.8</td><td>1.0</td></tr>
<tr><td>＞ 0.8</td><td>2.0</td></tr>
</table>
3. Bending Test:
The capacitor is held in vertical position. Attach a weight to the lead tabs, slowly rotate the capacitor 90° to a same way in the opposite direction. Repeat it again (5 secs / cycle). The lead tabs shall not be broken or cracked.
<table>
<tr><th>Lead tabs diameter (mm)</th><th>Weight(Kg)</th></tr>
<tr><td>≦ 0.5</td><td>0.25</td></tr>
<tr><td>0.6 ~ 0.8</td><td>0.50</td></tr>
<tr><td>＞ 0.8</td><td>1.00</td></tr>
</table></td></tr>
<tr><td>10</td><td>Solder ability Test</td><td colspan="3">After the lead wire fully immersed in the solder for 2 ± 0.5 secs at a temperature of 245 ± 5℃, the solder coating must be more than 95%.</td></tr>
<tr><td>11</td><td>Venting Test</td><td colspan="3">1. Applicable to the capacitors with case diameter is 6.3 mm and larger.
2. Test condition:
(1) AC test:
The capacitor shall be connected across a applying 50 or 60 Hz AC which is 0.7 times of rated voltage or 250Vrms AC whichever is the lower.
(2) DC test:
Applying inverse DC rated voltage with current to the capacitor.
Where case diameter: φD ≦ 22.4mm: 1 A DC max
φD ＞ 22.4mm: 10 A DC max
Note:
(1) When the pressure relief vent operated, the capacitor shall avoid any danger of fire or explosion of capacitor element (terminal and metal foil etc.) or cover.
(2) When the pressure relief device does not open with the voltage applied over 30 minutes, the test is considered to be passed.</td></tr>
<tr><td>12</td><td>Standards</td><td colspan="3">Satisfies Characteristic JIS C 5101-4</td></tr>
</table>

Precautions and Guidelines for Aluminum Electrolytic Capacitors

1. Guidelines for Circuit Design

Selecting the capacitors to suit installation and operating conditions, and using the capacitors to meet the performance limits prescribed in this catalogue or the product specifications.

(1) Polarity

Aluminum electrolytic capacitors are polarized. Make sure of the polarity, if used in reverse polarity, the circuit life may be shortened or the capacitor may be damaged. When the polarity in a circuit sometimes can be reversed or unknown, a bi-polar capacitor shall be used. Also, note that DC capacitors cannot be used for AC application. Reverse voltage 1 voltage acceptable within specified temperature and working voltage.

(2) Operating Voltage

Do not apply DC voltage, which exceeds the rated voltage of the capacitor and not be reverse voltage. If a voltage exceeding the capacitor's voltage rating is applied, the capacitor may be damaged as leakage current increase. Using capacitors at recommended working voltage prolongs capacitor life. The surge volgage rating is the maximum DC over-voltage to which the capacitors may be subjected of short periods.

(3) Ripple Current

(a) The combined value of DC voltage and the peak AC voltage shall not exceed the rated voltage. When an excessive ripple current passes, the capacitor may be damaged with the vent operating, etc. Use the electrolytic capacitor within the permissible ripple range current at specified frequency and temperature.

(b) The temperature coefficient shows the limit of ripple current exceeding the rated ripple current that can be applied to the capacitor at the temperature. The expected life of a capacitor is nearly equal to the lifetime at the upper category temperature.

(4) Operating Temperature

Use the capacitors according to the specified operating temperature range. If used the capacitor outside the maximum rated temperature will considerably shorten the life or cause the capacitor to vent. Usage at room ambient will ensure longer life.

(5) Leakage Current

The leakage current shall be within specified levels. When capacitors are applied at a lower voltage, the actual leakage current will be reduced proportionately.

(6) Charge and Discharge

The capacitor is not suitable for a circuit in which charge and discharge are frequently repeated. The capacitance value may drop by forming oxide layer on the cathode foil, or the capacitor may be damaged by generating heat due to continuous rapid charge and discharge.

(7) Condition of Use

(a) The capacitors shall not be exposed to water, saltwater spray, oil or fumes, high humidity or humidity condensation and direct sunlight.

(b) Ambient conditions that include hazardous gases / fumes such as hydrogen sulfide, sulfurous acid, nitrous acid, chlorine or bromine gas, ammonia, etc.

(c) Exposed to ozone, ultraviolet rays and radiation.

(d) Severe vibration or physical shock that exceeds the condition in specification sheets.

(8) Consideration to Circuit Design

(a) Please make sure the application and mounting conditions that the capacitor will be used are within the conditions specified in the catalog. If the conditions are beyond the conditions specified in the catalog, please contact Lelon.

(b) Do not design a circuit board so that heat-generating components are places near an aluminum electrolytic capacitor or reverse side of PCB. A cooling system is recommended.

(c) Operating temperature, applied voltage and ripple current shall be within specification. The ambient temperature shall not exceed the operating temperature and applied ripple current shall not exceed the allowable ripple current specified in the specification.

(d) Performances of electrical characteristics of aluminum electrolytic capacitors are affected by variation of operating temperature and frequency. Consider this variation designing the circuit.

(e) When two or more aluminum capacitors are connected in parallel, consider the current balance that flow through the capacitors.

(f) If more than two capacitors are connected in series, make sure the applied voltage will be lower than the rated voltage and that voltage will be applied to each equally using a balancing resistor in parallel with each capacitor.

(g) For appropriate choice of capacitors for circuit that repeat rapid charge and discharge, please consult Lelon.

(h) Outer sleeve of the capacitor is not guaranteed as an electrical insulator. Do not use a standard sleeve on a capacitor that requires the electrical insulation. When the application requires special electrical insulation, please contact Lelon.

(i) Do not tilt lay down or twist the capacitor's body after the capacitor is soldered to the PCB.

2. Caution for Assembling Capacitors

(1) Mounting

(a) Aluminum electrolytic capacitors cannot be re-used once the capacitor has assembled in the set and power applied.

(b) Aluminum electrolytic capacitors may have electrical potential between positive and negative terminal, please discharge through a 1KΩ resistor before use.

(c) Leakage current of Aluminum electrolytic capacitors may be increased after storage a long period of time. When leakage current has increased, please perform a voltage treatment before use.

Voltage treatment:

The capacitors shall be applied with DC rated voltage through a resistor of 1KΩ in series for one hour, and then discharge through a resistor of 1KΩ. When the capacitors have been assembled in the board, use a volt regulator to input voltage gradually to the rated voltage of the board.

(d) Please confirm the rated voltage before mounting.

(e) Please confirm the polarity before mounting.

(f) Do not use the capacitor that once dropped on the hard floor.

(g) Do not damage the capacitor while mounting.

(h) Capacitors shall be mounted that hold spacing on PCB matches the lead pitch of the capacitors.

(i) During the auto-insertion process and parts inspection, capacitors shall avoid the excessive force and shock.

(j) Do not design to locate any wiring or circuit around the capacitor's pressure relief vent. The following clearance should be made above the pressure relief vent. The pressure relief vent will not open without the appropriate free space.

Case Diameter	φ6.3 ~φ16	φ18 ~ φ35	φ40 or more
Clearance (min)	2 mm	3 mm	5 mm

(2) Soldering

(a) Be careful of temperature and time when soldering. Dip of flow soldering of the capacitors should be limited at less than 260±5℃ and 10±1 seconds or soldering iron with 350±10℃ for 3+1/-0 seconds . Do not dip capacitor's body into melted solder.

(b) High humidity will affect the solder ability of lead wire and terminals. High temperature will reduce long-term operating life.

(c) Except SMD type, reflow soldering can not be used for any types of aluminum electrolytic capacitors. When using SMD type capacitor, please check the reflow profile. The temperature and duration shall not exceed the specified temperature and duration in the specification. If the temperature or duration is higher than the value specified, please consult Lelon before usage.

(d) Standard aluminum electrolytic capacitors cannot withstand more than one reflow process. Please consult our engineering department when needed.

(e) Defective mountiong on PCB and improper external strength applied on the lead wires or case body after soldering (see below drawings) may damage inside structure of the capacitor and may cause short circuit, high leakage current or leakage problems.
(i) Good soldering.
(ii) Hole-to-hole space on board differs from the lead space of lead wires.
(iii) Lead wires are bent after soldering.
(iv) Case body doesn't stand vertical on board after soldering. Do not bend or twist the capacitor's body after soldering.

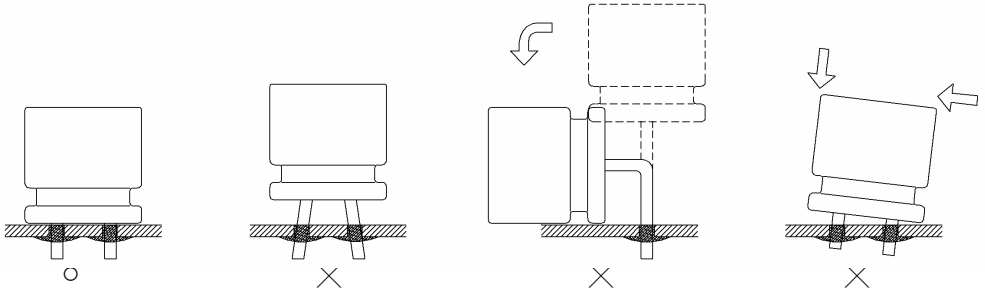

(3) Cleaning Circuit Boards After Soldering
Halogenated solvent cleaning is not available for aluminum electrolytic capacitors. IPA (Isopropyl Alcohol) is one of the most acceptable cleaning agents; it is necessary to maintain a flux content in the cleaning liquid at a maximum limit of 2 Wt. %. If you use other cleaning agents, please consult Lelon.

3. Maintenance Inspection
Periodical inspection is necessary for using the aluminum capacitors with industrial equipment. The following items should be checked:
(1) Appearance: Vent operation, leaking electrolyte, etc.
(2) Electrical characteristic: Capacitance, dissipation factor, leakage current, and other specified items listed in specification.
Lelon recommend replacing the capacitors if the parts are out of specification.

4. Storage
(1) Aluminum electrolytic capacitor should not be stored in high temperature or high humidity condition. The suitable condition is 5℃ ~ 35℃ and less than 75% in relative humidity indoor.
(2) Do not store the capacitors in damp conditions such as water, brine or oil.
(3) Do not store the capacitors that exposed to hazardous gas such as hydrogen sulfide, sulfurous acid, nitrous acid, chlorine, ammonium, etc.
(4) Do not store the capacitors that exposed to ozone, ultraviolet rays or radiation.
(5) Do not expose the capacitors to acidic or alkaline solutions.
(6) It is not applied to a regulation of JEDEC J-STD-020 (Rev. C).

5. Disposal
Please consult with a local industrial waste disposal specialist when disposing of aluminum electrolytic capacitors.

6. Environmental Consideration
Lelon already have receivd ISO 14000 certificate. Cadmium (Cd), Lead (Pb), Mercury (Hg), Hexavalent Chromium (Cr+6), PBB and PBDE have never been using in capacitor. If you need "Halogen-free" products, please consult with us.

For further details, please refer to
IEC 60384-4- Fixed capacitors for use in electronic equipment – Part 4: Sectional specification – Aluminium electrolytic capacitors with solid (MnO2) and non-solid electrolyte (Established in January 1995, Revised in March 2007), and

EIAJ RCR-2367B- Guideline of notabilia for fixed aluminium electrolytic capacitors for use in electronic equipment [Technical Standardization Committee on Passive Components (Established in March 1995, Revised in March 2002)].