PDF-XChange Viewer Click to buy NOW! www.docu-track.com

# SPECIFICATION FOR APPROVAL

# 承 認 書

Date: 2016.03.02

客戶名稱(CUSTOMER): 佳 世 達

品　名(DESCRIPTION): Display Port, R/A SMT TYPE. Female, W/Spring

料　號(PART NO.): 699FA20-0N009A-H

承認編號(APPROVED NO.): 2B.C0133.091

| CUSTOMER'S DECISION | V | CUSTOMER'S SIGNATURE | NOTE |
|---|---|---|---|
| FULL APPROVED | | | |
| CONDITION APPROVED | | | |
| REJECTED | | | |

**ENG. DEPT.**　　**Q.A DEPT.**

Astron
大曜科技股份有限公司
6F, No.23 Wu-Kung 6 Road, Wu-Ku Ind. Park
Tapiei Hsien, Taiwan, R.O.C.
TEL: 886-2-22990885　FAX: 886-2-22988757
E-mail: sales@astron.com.tw

PDF-XChange Viewer Click to buy NOW! www.docu-track.com

# The row materials' list of the component

| | |
|---|---|
| Astron PN | 699FA20-0N009A-H |
| Component Description | Display Port, R/A SMT TYPE. Female, W/Spring |

| Item | Part Name | Material |
|---|---|---|
| 1 | HOUSING & CAP | LCP E130i |
| 2 | TERMINAL | BRASS C2680 |
| 3 | SHELL | C5191 |
| 4 | SPRING | SUS304 |
| 5 | MYLAR | Polyinmide |
| 6 | GOLD PLATING | GOLD PLATING |
| 7 | NICKEL PLATING | NICKEL PLATING |
| 8 | | |
| 9 | | |
| 10 | | |

PDF-XChange Viewer Click to buy NOW! www.docu-track.com

| REV. | ECN NO. | DATE |
|---|---|---|
| A | N13'11033 | Nov 6, 20 |
| B | N14'03002 | Feb 14 |
| C | N14'19018 | Sep.11, |

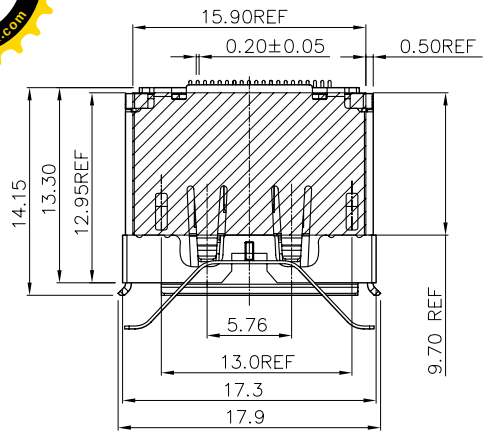


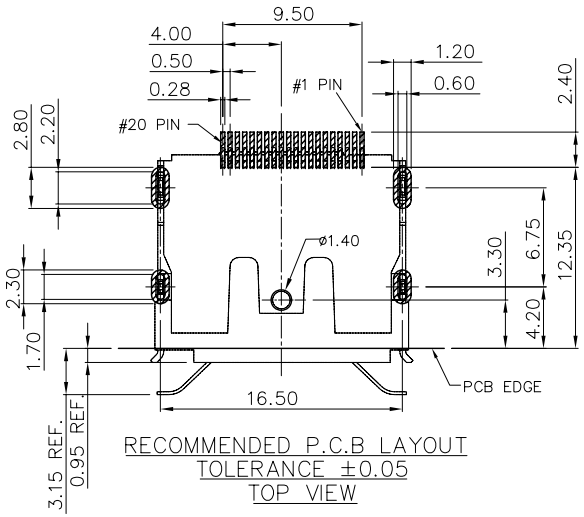


RECOMMENDED P.C.B LAYOUT
TOLERANCE ±0.05
TOP VIEW

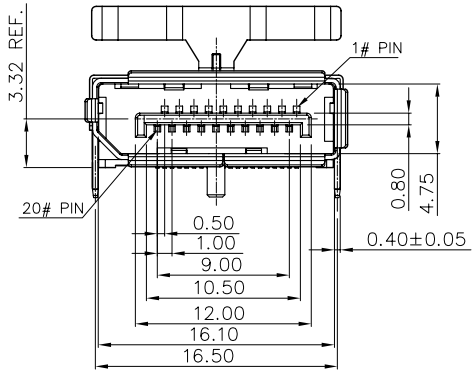


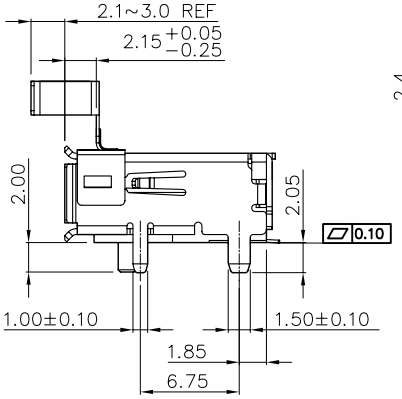


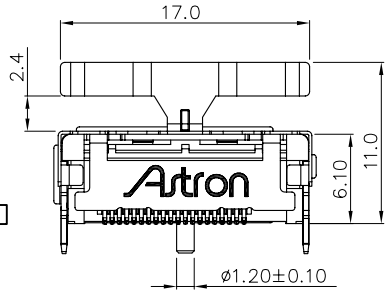


## MATERIALS

1. HOUSING : LCP (UL94V−0),BLACK.
2. TERMINAL : BRASS, GOLD PLATING.
   UNDER 80u"NICKEL PLATING
3. SHELL : BRASS, 50u"NICKEL PLATING.
4. SPRING: STAINLESS STEEL, T=0.20mm.

## SPECIFICATION

1. CURRENT RATING : 0.5A. MAX.
2. DIELECTRIC WITHSTANDING VOLTAGE : 500V AC R.M.S. FOR ONE MINUTE.
3. INSULATION RESISTANCE : 100MΩ MIN. AT 500V DC
4. CONTACT RESISTANCE : 30mΩ MAX.
5. OPERATING TEMPERATURE : −25℃ TO +85℃.
6. DURABILITY : 10000 CYCLES.
7. MATING FORCE : 4.5kgf MAX.
8. UNMATING FORCE : 1.0kgf MIN.

## PART NUMBER INFORMATION

699FA20−XN009A−H

- SERIES CODE
- SMT
- FEMALE
- NUMBER OF POSITIONS
- HALOGEN FREE
- FOLLOW NUMBER
- CONTACT PLATING

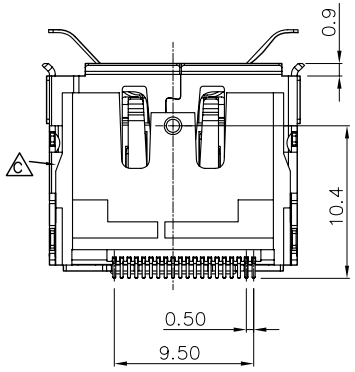


DRAWING WITH CAP

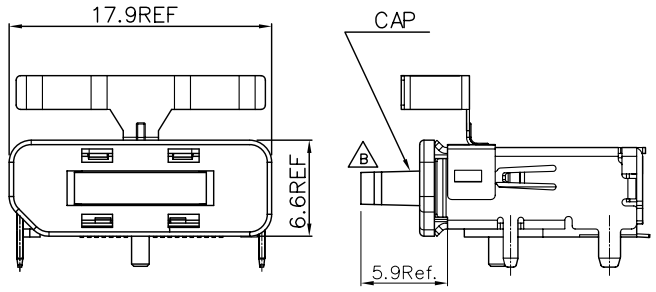


| DESCRIPTION OF PLATING ON TERMINALS | | | |
|---|---|---|---|
| NO. | EXPLAIN | NO. | EXPLAIN |
| 0 | GOLD 1u" | 3 | GOLD 15u" |
| 6 | GOLD 30u" | | |

| | | | |
|---|---|---|---|
| TOLERANCE<br>.0=±0.25<br>.00=±0.15<br>.000=±0.05<br>ANG.=±3° | DRAWER Stony<br>CHECK Stony<br>APP'D Johnson<br>PRODUCT SPEC. — | Astron<br>ASTRON TECHNOLOGY CORP. | |
| UNITS : mm | | NAME<br>DISPLAY PORT R/A SMT TYPE. FEMALE. WITH SPRING | |
| SCALE NONE | SIZE A4 | SHEET 1 OF 2 | REV. C |
| | | DRAW NO.<br>R699FA20−XN009A−H | |

PDF-XChange Viewer Click to buy NOW! www.docu-track.com

| REV. | ECN NO. | DATE |
|---|---|---|
| A | N13'11033 | Nov 6, 20 |
| B | N14'03002 | Feb. 14 |
| C | N14'19018 | Sep.11, |

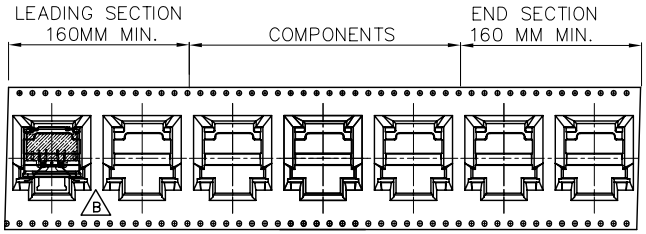


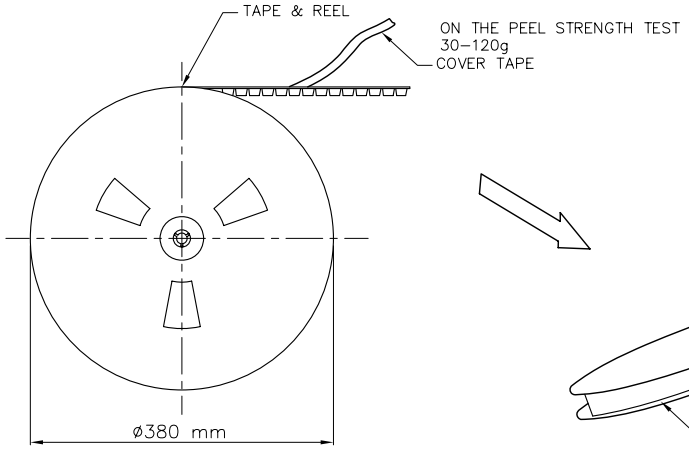


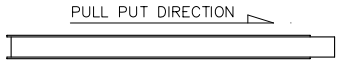


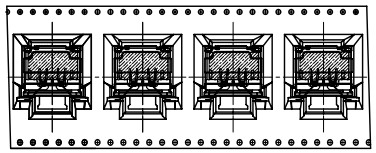

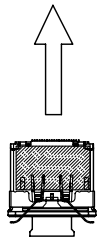

PRODUCT DIRECTION

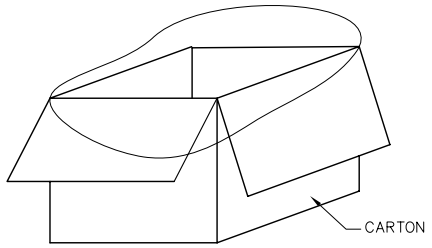


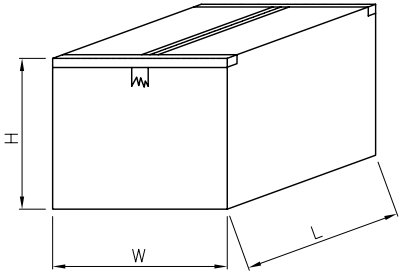


## TAPE & PACKAGE :

MATERIAL :
1. CARRIER TAPE : PS
2. COVER TAPE: PE
3. REEL : PS

QUANTITY:
1. 200 PCS/REEL
2. 1400PCS/CARTON:

DIMENSION :
REEL SIZE :
DIA=380.0mm, W=44.0mm
CARTON :
L=420mm, W=406mm, H=380mm

| | | | |
|---|---|---|---|
| TOLERANCE<br>.0=±0.25<br>.00=±0.15<br>.000=±0.05<br>ANG.=±3° | DRAWER Stony<br>CHECK Stony<br>APP'D Johnson | Astron<br>ASTRON TECHNOLOGY CORP. | |
| UNITS : mm | PRODUCT SPEC. — | NAME<br>DISPLAY PORT R/A SMT TYPE.<br>FEMALE. WITH SPRING | |
| SCALE NONE / SIZE A4 | SHEET 2 OF 2 / REV. C | DRAW NO.<br>R699FA20-XN009A-H | |

PDF-XChange Viewer Click to buy NOW! www.docu-track.com



# Astron Technology Corp.

# PRODUCT SPECIFICATION

| | |
|---|---|
| **Part No. :** | **699FA20-0N009A-H** |
| **Subject :** | **DISPLAY PORT** |
| **File :** | **SPEC 699FA20** |
| **Revision :** | **A** |
| **Date :** | **17/03/2010(DAY/MONTH /YEAR)** |

| | |
|---|---|
| **Initiated :** | *Kent* |
| **Checked:** | *Xinquan* |
| **Approved :** | *Rex* |

PDF-XChange Viewer Click to buy NOW! www.docu-track.com



## 1. Scope

This specification covers the product performance, test methods and quality requirements of the display port connector.

## 2. Applicable Specifications

The following documents form a part of this specification to the extent specified here in. In the event of conflict between the requirements of this specification and the product drawing, the product drawing shall take precedence. In the event of conflict between the requirements of this specification and the referenced documents, this specification shall take precedence.

| | |
|---|---|
| **EIA-RS-364** | Test methods for electronic connector |
| **MIL-STD-1344A** | Test methods for electronic connector |
| **MIL-STD-202F** | Test methods for electrical component parts |
| **UL 94** | Flammability standard |
| **MIL-G-45204** | Gold plating standard |
| **MIL-T-10727** | Tin plating standard |
| **FED-QQ-N-290** | Nickel plating standard |

## 3. Requirements

### 3-1 Design and construction :

Product shall be of the design, construction and physical dimensions specified in the applicable product drawing.

### 3-2 Materials and finish:

**3-2.1 Insulator :** ThermoplasticPlastic, UL 94V-0 Rated.

**3-2.2 Terminal :** Copper Alloy

**3-2.3 SHELL:** Copper Alloy

3-2.4 SPRING: STAINLESS STEEL

### 3-3 Ratings :

**3-3.1 Current rating :** 0.5A.

**3-3.2 Operating Temperature :** －25℃～＋85℃.

3-3.3 Voltage Rating : 40 Volts.

**3-4 Product shape and dimensions :** Ref. Customer drawings.

## 4. Quality Assurance Provisions

**4-1** Test specimens shall be inspected to assure compliance to the requirements of this specification.

PDF-XChange Viewer Click to buy NOW! www.docu-track.com



**4-2** No sample shall be reused unless otherwise specified.

## 5. Package

Parts shall be packaged as Astron packing specification.

## 6. Test Requirements and Procedures Summary

| No. | Test Items | Requirements | Procedures |
|---|---|---|---|
| **6-1** | **Initial examination of product** | Meet requirement of product drawing. | Visual and dimensional inspection per product drawing.<br><br>**EIA-364-18A** |
| **6-2** | **Final examination of product** | Meet visual requirement. | Visual inspection.<br><br>**EIA-364-18A** |
| **Electrical Requirements** | | | |
| **6-3** | **Contact Resistance (Low level)** | Contact: 30mΩ Max.<br>Shell: 50mΩ Max. | The pad and connector were mated. Low-level current was applied and resistance measurements were taken. See Figure 1<br>(DC 20mV Max., 100mA Max. )<br><br>**EIA-364-23C** |
| **6-4** | **Insulation Resistance** | 100MΩ Min. | Measurements insulation resistance on unmated connectors.A potential of 500V DC was applied between all contacts.<br><br>**EIA-364-21D** |
| **6-5** | **Dielectric Withstanding Voltage** | 1. 500V AC R.M.S. for one minute.<br>2. No evidence of flashover or breakdown. | The potential was applied between adjacent contacts of the connector for one minute.<br><br>**EIA-364-20D** |
| **Mechanical Requirements** | | | |
| **6-6** | **Durability** | 1.Appearance :<br>No evidence of Physical damage.<br>2.Contact resistance:<br>50mΩ Max(Finally). | Mate and unmate samples for10000 cycles at rate of 100±50 cycles per hour.<br><br>**EIA 364-09C** |

PDF-XChange Viewer Click to buy NOW! www.docu-track.com



| | | | |
|---|---|---|---|
| **6-7** | **Normal Force** | 1. Mating force: 4.5kgf Max<br>2. Unmating force 1.0kgf Min 4.0kgf Max | Measure forces necessary to push terminal. (speed:per minute, displacement:25mm)<br><br>**EIA-364-13D** |
| **6-8** | **Contact Retention Force (Per Pin)** | 0.25 Kgf /pin min. | The force shall be measured with the insulation and contacts retention force. This test shall be made in a direction along the axis of both the insulation and the contacts.<br>**EIA-364-29C** |
| **6-9** | **Vibration** | 1.Appearance :<br>No evidence of physical damage.<br>2.The electrical performances should meet the spec.specified | The entire frequency range, from 10 to 55 Hz and return to 10Hz shall be traversed in approximately 1 minute. This motion shall be applied for 2 hours in each of 3 mutually perpendicular directions. (total of 6 hours)<br>Amplitude: 1.50mm Max.<br><br>***EIA-364-28E*** |
| **Environments Requirements** | | | |
| **6-10** | **Solderability** | Continuous soleer coating With a minium 95% coverage | After 5~10 seconds flux deep. Subject connector lead to solder bath (only Tin) at 245˚C ± 5˚C for 4~5 seconds.<br><br>**MIL-STD-202F, Method 208** |
| **6-11** | **Temperature Life ( Heat )** | 1.Appearance :<br>No evidence of physical damage.<br>2.The electrical performances should meet the spec.specified | The specimens shall be subjected to a temperature of +105± 5˚C for 250 hours, then placed in ambient temperature for more than 3 hours.<br><br>**MIL-STD-1344A, Method 1005.1** |
| **6-12** | **Temperature Life ( Cold )** | 1.Appearance :<br>No evidence of physical<br>2.The electrical performances should meet the spec.specified | The specimens shall be subjected to a temperature of +105± 5˚C for 250 hours , then placed in ambient temperature for more than one to two hours.<br><br>**MIL-STD-1344A, Method 1005.1** |

PDF-XChange Viewer Click to buy NOW! www.docu-track.com



| | | | |
|---|---|---|---|
| **6-13** | **Humidity** | 1.No evidence of physical damage.<br>2.Conform to item of Contact Resistance | The specimens shall be placed in a chamber and subjected to a relative humidity of 80% to 95% and a temperature of +25 to +85℃ for 96 hours, then placed in ambient temperature for more than 1 hour.<br><br>**EIA-RS-364-31A** |
| **6-14** | **Salt Spray** | 1.Appearance :<br>No evidence of Physical damage.<br>2.The electrical performances should meet the spec.specified | The specimens shall be subjected to a salt water spray (concentration : 5±1%) at a temperature of 35±2℃ for 24 hours, then placed in ambient temperature for more than 1 hour.<br>**EIA-RS-364-26A** |
| **6-15** | **Resistance to Soldering heat** | No evidence of Physical damage. | The connector shall be tested resistance. To soldering heat in the following conditions.<br> 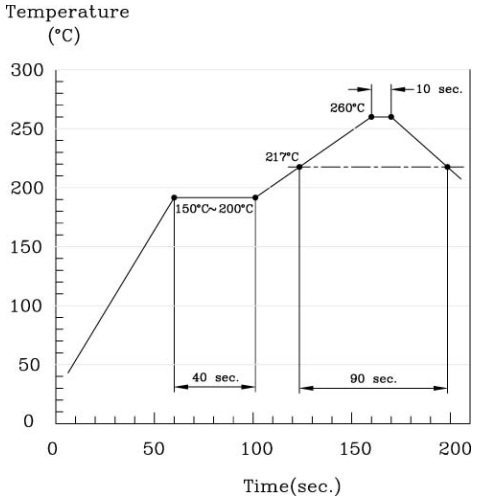 |

PDF-XChange Viewer Click to buy NOW! www.docu-track.com



## 7. Qualification Test Procedure:

| NO. | Test Item | Test Sequence(8PCS/Group) | | | | | | | | | | |
|---|---|---|---|---|---|---|---|---|---|---|---|---|
| | | A | B | C | D | E | F | G | H | I | J | K |
| 6-1,2 | Visual Examination | 1<br>3 | 1<br>5 | 1<br>3 | 1<br>3 | 1<br>3 | 1<br>3 | 1<br>7 | 1<br>7 | 1<br>7 | 1<br>7 | 1<br>3 |
| 6-3 | Contact Resistance (Low level) | | 2<br>4 | | | | | 2<br>5 | 2<br>5 | 2<br>5 | 2<br>5 | |
| 6-4 | Insulation Resistance | | | | | | | 3<br>6 | 3<br>6 | 3<br>6 | 3<br>6 | |
| 6-5 | Dielectric Withstanding Voltage | 2 | | | | | | | | | | |
| 6-6 | Durability (Male /Female) | | 3 | | | | | | | | | |
| 6-7 | Contact Normal Force | | | 2 | | | | | | | | |
| 6-8 | Contact Retention Force | | | | 2 | | | | | | | |
| 6-9 | Vibration | | | | | 2 | | | | | | |
| 6-10 | Solderability | | | | | | 2 | | | | | |
| 6-11 | Temperature Life ( Heat ) | | | | | | | 4 | | | | |
| 6-12 | Temperature Life ( Cold ) | | | | | | | | 4 | | | |
| 6-13 | Humidity | | | | | | | | | 4 | | |
| 6-14 | Salt Spray | | | | | | | | | | 4 | |
| 6-15 | Resistance to Soldering heat | | | | | | | | | | | 2 |

PDF-XChange Viewer Click to buy NOW! www.docu-track.com



## POLYPLASTICS CO LTD

VECTRA DIV, 18-1 KONAN 2-CHOME, MINATO-KU, TOKYO 108-8280 JP

## E130i(d)(e)(h)

**Liquid Crystal Polymer (LCP), thermotropic aromatic polyester, "Vectra", furnished as pellets**

| Color | Min Thk (mm) | Flame Class | HWI | HAI | RTI Elec | RTI Imp | RTI Str |
|---|---|---|---|---|---|---|---|
| BK | 0.4 | V-0 | - | - | 130 | 130 | 130 |
| ALL | 0.75 | V-0 | 2 | 4 | 240 | 220 | 240 |
| | 1.5 | V-0 | 1 | 4 | 240 | 220 | 240 |
| | 3.0 | V-0 | 0 | 4 | 240 | 220 | 240 |

Comparative Tracking Index (CTI): 4

Dimensional Stability (%): 0

High-Voltage Arc Tracking Rate (HVTR): 0

High Volt, Low Current Arc Resis (D495): 5

Dielectric Strength (kV/mm): 39

Volume Resistivity (10xohm-cm): 16

(d) - Virgin and regrind up to 50% by weight incl. have the same basic material characteristics for colors NC and BK in the 0.75, 1.5 and 3.0 thickness.

(e) - In addition, regrind at 26 to 50% have the same basic characteristics at a minimum of 1.5mm except RTI's for the Mechanical w/Impact property is 180C.

(h) - Recognition of virgin only at 0.4 mm in BK.

UL94 small-scale test data does not pertain to building materials, furnishings and related contents. UL94 small-scale test data is intended solely for determining the flammability of plastic materials used in the components and parts of end-product devices and appliances, where the acceptability of the combination is determined by ULI.

Report Date: 1992-08-19

Last Revised: 2006-09-06

Underwriters Laboratories Inc®

# IEC and ISO Test Methods

| Test Name | Test Method | Units | Thickness Tested (mm) | Value |
|---|---|---|---|---|
| IEC Flammability | IEC 60695-11-10 | Class (color) | 0.4 | V-0 (BK) |
| | | | 0.75 | V-0 (ALL) |
| | | | 1.5 | V-0 (ALL) |
| | | | 3.0 | V-0 (ALL) |
| Glow-Wire Flammability (GWFI) | IEC 60695-2-12 | C | - | - |
| Glow-Wire Ignition (GWIT) | IEC 60695-2-13 | C | - | - |
| IEC Comparative Tracking Index | IEC 60112 | Volts (Max) | - | - |
| IEC Ball Pressure | IEC 60695-10-2 | C | - | - |
| ISO Heat Deflection (1.80 MPa) | ISO 75-2 | C | - | - |
| ISO Tensile Strength | ISO 527-2 | MPa | - | - |
| ISO Flexural Strength | ISO 178 | MPa | - | - |
| ISO Tensile Impact | ISO 8256 | kJ/m2 | - | - |
| ISO Izod Impact | ISO 180 | kJ/m2 | - | - |
| ISO Charpy Impact | ISO 179-2 | kJ/m2 | - | - |

PDF-XChange Viewer Click to buy NOW! www.docu-track.com
PDF-XChange Viewer Click to buy NOW! www.docu-track.com

# VECTRA E130i (ASTM)

| 项目 | 单位 | 测试方法 | 高耐热，高流动<br>E130i<br>玻璃纤维，标准 |
|---|---|---|---|
| 颜色 | | | VF2201/BK210P/BK205P/BK211P |
| ISO(JIS)材质表示 | | ISO11469<br>(JIS K6999) | >LCP-GF30< |
| 密度 | g/cm³ | ISO 1183 | 1.61 |
| 拉伸强度* | MPa | ASTM D638 | 175 |
| 拉伸率* | % | ASTM D638 | 2 |
| 弯曲强度 | MPa | ISO 178 | 220 |
| 弯曲模量 | MPa | ISO 178 | 15,000 |
| 弯曲应变 | % | ISO 178 | 2.3 |
| 简支梁冲击强度（有缺口） | kJ/m² | ISO 179/1eA | 35 |
| 负荷变形温度（1.8MPa） | ℃ | ISO 75-1,2 | 280 |
| 绝缘破坏强度（1mmt） | kV/mm | IEC 60243-1 | 44 |
| 绝缘破坏强度（3mmt） | kV/mm | IEC 60243-1 | 24 |
| 体积电阻率 | Ω・cm | IEC 60093 | $1.0 \times 10^{16}$ |
| 介电常数（1kHz） | | IEC 60250 | 4.3 |
| 介电常数（1MHz） | | IEC 60250 | 3.8 |
| 介电损耗角正切（1kHz） | | IEC 60250 | 0.017 |
| 介电损耗角正切（1MHz） | | IEC 60250 | 0.032 |
| 耐导电径迹 | V | IEC 60112 | 125 |
| 耐电弧性 | s | | 130 |
| 成型收缩率（80□×1mmt、流动方向、注射压力 60MPa） | % | | 0.02 |
| 成型收缩率（80□×1mmt、垂直方向、注射压力 60MPa） | % | | 0.54 |
| 成型收缩率（80□×1mmt、流动方向、注射压力 79MPa） | % | | - |
| 成型收缩率（80□×1mmt、垂直方向、注射压力 79MPa） | % | | - |
| 阻燃性 | | UL94 | V-0 |

PDF-XChange Viewer Click to buy NOW! www.docu-track.com

# REPORT OF MATERIAL TEST

怡程金属（深圳）有限公司

地址：深圳市龙岗区坪山镇深圳出口加工区荔景路

TEL：0755--61291589 FAX：0755--61291289

DATE：APR.06. 07

| Customer: | Commodity: C 2680 R BRASS STRIP (SH) | INVOICE/NO:CL960406 |
|---|---|---|
| Applied Standard:CNS 4383 Brass Sheets, Plates and Strips | | |

## Chemical Analysis Test

| I/No. | Size of Produet | | | Cu(%) | Fe(%) | Pb(%) | Zn(%) | | | |
|---|---|---|---|---|---|---|---|---|---|---|
| | Thickness (mm) | Width (mm) | Length (mm) | | | | | | | |
| | Standard | | | 64.00 - 68.00 | max. 0.050 | max. 0.070 | REM. | | | |
| 5 | 0.2 | 57.8 | | 65.63 | 0.035 | 0.007 | REM. | | | |
| 6 | 0.2 | 24.5 | | 65.63 | 0.035 | 0.007 | REM. | | | |
| | | | | | | | | | | |
| | | | | | | | | | | |
| | | | | | | | | | | |

## Mechanical & Physical Test

| I/No. | Size of Produet | | | Dimensicn Test | | Tension Test | | Hardness Test HV | Grain Size (mm) | Electric Conductirity (%) |
|---|---|---|---|---|---|---|---|---|---|---|
| | Thickness (mm) | Width (mm) | Length (mm) | Thickness (mm) | Width (mm) | TensileStrength (kgf/mm2) | Elongation (%) | | | |
| | Standard | | | - | (-)0.10 - (+) 0.00 | min-53 | - | min- | - | - |
| 5 | 0.2 | 57.8 | | G00D. | G00D. | 57.46 | 7.59 | 182 | - | 24.02 |
| 6 | 0.2 | 24.5 | | G00D. | G00D. | 57.46 | 7.59 | 183 | - | 24.02 |
| | | | | | | | | | | |
| | | | | | | | | | | |
| | | | | | | | | | | |

QC Supervisor: 秦會

PDF-XChange Viewer Click to buy NOW! www.docu-track.com

# 試　験　成　績　書

INSPECTION CERTIFICATE

日鉱金属株式会社　倉見工場
KURAMI WORKS, NIPPON MINING & METALS CO., LTD.
0018　神奈川県高座郡寒川町倉見３番地
3 KURAMI, SAMUKAWA-MACHI, KOUZA-GUN,
KANAGAWA-KEN 〒253-0101
TEL 0467-75-0611

需要家　同朋中国　殿
CUSTOMER

扱　先　同朋香港　有限公司
MESSRS.

製品名　C5191R−H（190−210）
PRODUCTS

寸　法　0.4　X　305　X　L
SIZE

規　格
SPECIFICATION

発　行　日　2007年05月25日
DATE OF ISSUE

納品書番号　48319
DELIVERY SHEET NO.

注文番号　NK7−0503
CONTRACT NO.

オーダー番号　05
ORDER NO.

品質保証課長
MANAGER OF QUALITY ASSURANCE SECTION

村岡慶一

化学成分
CHEMICAL COMPOSITIONS

| 規格 SPECIFICATION | | Zn % | Sn % | P % | Fe % | Pb % | Cu+Sn+P % | 質量 MASS (KG) |
|---|---|---|---|---|---|---|---|---|
| 製造番号 | MIN | | 5.5 | 0.05 | | | 99.7 | |
| LOT NO. | MAX | 0.20 | 7.0 | 0.26 | 0.10 | 0.02 | | |
| 95710 | | 0.01 | 6.07 | 0.12 | 0.003 | 0.003 | 99.96 | 1,320.00 |
| | | | | | | | | |
| | | | | | | | | |
| | | | | | | | | |

機械的および物理的性質
MECHANICAL AND PHYSICAL PROPERTIES

| 規格 SPECIFICATION | | 引張強さ TENSILE STRENGTH N／㎟ | 伸び ELONGATION % | 硬さ HARDNESS HV |
|---|---|---|---|---|
| 製造番号 | MIN | 590 | 8.0 | 190 |
| LOT NO. | MAX | 685 | | 210 |
| 95710 | | 627 | 18.8 | 199.0 |
| | | | | |
| | | | | |
| | | | | |

寸法検査　GOOD
DIMENSIONAL INSPECTIONS

外観検査　GOOD
SURFACE INSPECTIONS

備考
REMARKS.

この製品は品質管理計画に基づき製造され、検査・試験を行ない、規格に合格したことを証明する。
WE HEREBY CERTIFY THAT THE PRODUCTS DESCRIBED HEREIN HAVE BEEN MANUFACTURED, INSPECTED AND TESTED IN ACCORDANCE WITH THE SPECIFICATION AND Q.C. PROGRAM.

PDF-XChange Viewer
Click to buy NOW!
www.docu-track.com

#304 0.2 个支点 [illegible]

# 檢驗證明書
# INSPECTION CERTIFICATE

客戶：
Customer
訂單號碼：CF20020222
Contract NO.

[illegible]工業股份有限公司
CHIA PAR INDUSTRIAL FACTORY CO., LTD.
公司：台北市大[illegible]83號
日期：02/22/2002

| 項目 Item | 產品名稱 Description | 產品尺寸 Size | 鋼種 Type | 鋼種記號 Finish | 數量 Quantity | 重量 Weight | 鋼捲號碼 Coil No. | 爐碼 Heat No. | 箱號 C/NO |
|---|---|---|---|---|---|---|---|---|---|
| 1 | CSP | 0.200M/M X 15.50M/M X C | 304 | B | 1 | 3 KG | BAC2EG2015021 | | |
| | | | | | | | | | |
| | | | | | | | | | |
| | | | | | | | | | |
| | | | | | | | | | |
| | | | | | | | | | |
| | | | | | | | | | |
| | | | | | | | | | |

| 化學成份 (%) Chemical Composition | | | | | | | | | | 物理試驗 Mechanical Test | | | | By 13B |
|---|---|---|---|---|---|---|---|---|---|---|---|---|---|---|
| 項目 Item | C % | Si % | Mn % | P % | S % | Cr % | Ni % | N % | Cu % | 抗拉強度 T.S N/mm2 | 降伏強度 Y.S(0.2% N/mm2 | 伸長率 Elong % | 硬度試驗 Hardness HV | 晶粒 G.S |
| 1 | 0.450 | 0.51 | 1.25 | 0.027 | 0.005 | 18.24 | 8.13 | na | na | na | na | na | 382 | na |
| | | | | | | | | | | | | | | |
| | | | | | | | | | | | | | | |
| | | | | | | | | | | | | | | |
| | | | | | | | | | | | | | | |
| | | | | | | | | | | | | | | |
| | | | | | | | | | | | | | | |
| | | | | | | | | | | | | | | |

| 產品名稱 Description | 檢驗規範 Regulation | 品管主任 QC Manager | 檢驗員 Inspector |
|---|---|---|---|
| CS: 冷軋不銹鋼帶 Cold Rolled Stainless Steel Strips<br>CP: 冷軋不銹鋼片 Cold Rolled Stainless Steel Plates<br>HA: 熱軋不銹鋼角鋼 Hot Rolled Stainless Steel Angles Bar<br>na: 不適用的 Not Applicable | C N S 9265<br>C N S 8499<br>C N S 7794 | [illegible] | [illegible] |

PDF-XChange Viewer Click to buy NOW! www.docu-track.com
PDF-XChange Viewer Click to buy NOW! www.docu-track.com

# TAPE

**Polyinmide**

## *Product Information*

TECHNICAL DATA SHEET

## PRODUCT DATA

| | |
|---|---|
| Backing Material | Polyinmide |
| Backing Thickness（mm） | 0.025 |
| Total Thickness（mm） | 0.06±0.01 |
| Heat Durability（℃） | 180 |
| Dielectric Breakdown（volts） | 5,000 |
| Conductivity（megohms） | $10^6$ |
| Tensile Strength（N / 25mm） | 155 |
| Elongation（%） | 50 |
| Adhesion Strength（N / 25mm） | 5 |

Remark： 1.Total thickness is not include of releasing paper.
2.The date is subject to change without notice.
3.The above testing values,just for reference only.

## Adhesion Analysis

| | |
|---|---|
| Adhesive Component | Silicon PSA |
| Color | Transparent |
| Viscosity（25℃） | 2,000 ~ 8,000 CPS |
| Proper Component | （150 ℃ * 15 Min）40 ± 1% |
| In The Initial Stage Viscosity | 1.5 kg / 25 mm ↑ |
| To Maintain Viscosity | （PSTV - 7）1,440 Min / inch ↑ |
| Temperature Range | - 73 ℃ ~ 280 ℃ |

PDF-XChange Viewer Click to buy NOW! www.docu-track.com

# WIESON TECHNOLOGIES CO.,LTD

Industriestrasse 21
71069 Sindelfingen

**Fischerscope XRAY XULM**
**Product:** 34 / Au/Ni/Brass0.2
**Application:** 35 / Au/Ni/Brass0.2

Dir.: **Fischer** **Block:** **3797**

RD

**GM3167-0340** **12486**

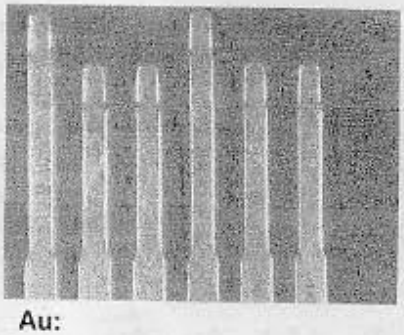

**Au:**

| | | | | | |
|---|---|---|---|---|---|
| n= | 1 | Au 1 = | 15.3 µ" | Ni 2 = | 117.9 µ" |
| n= | 2 | Au 1 = | 15.6 µ" | Ni 2 = | 117.3 µ" |
| n= | 3 | Au 1 = | 15.5 µ" | Ni 2 = | 123.1 µ" |
| n= | 4 | Au 1 = | 15.3 µ" | Ni 2 = | 126.3 µ" |
| n= | 5 | Au 1 = | 15.7 µ" | Ni 2 = | 115.8 µ" |

Operator: Angel

Date: 2010/10/20 Time: 下午 03:14:07

OK

PDF-XChange Viewer Click to buy NOW! www.docu-track.com

# WILSON TECHNOLOGIES CO.,LTD

Industriestrasse 21
71069 Sindelfingen

**Fischerscope XRAY XULM**
**Product:** 19 / Ni/Cu **Dir.:** Fischer **Block:** 1262
**Application:** 36 / Ni/Cu

RD

**GM3167-0310 12487**

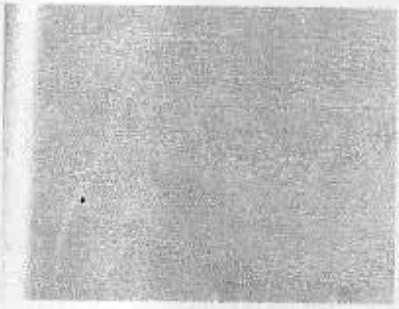

**Ni: 30-80u"**
**n= 1 Ni 1 = 69.3 µ"**
**n= 2 Ni 1 = 54.8 µ"**
**n= 3 Ni 1 = 61.1 µ"**
**n= 4 Ni 1 = 59.3 µ"**
**n= 5 Ni 1 = 80.2 µ"**

Operator: Angel

Date: 2010/10/21 Time: 下午 04:17:03

PDF-XChange Viewer Click to buy NOW! www.docu-track.com

# 東莞肯上精密五金有限公司

DongGuan Astron Precision Hardware CO.,LTD

## 產品檢驗報告

| 料號 Material PN | 699FA20-0N009A-H | 客戶料號 Customer PN | 2B.C0133.091 | 日期 Date | 2015/10/14 |
|---|---|---|---|---|---|
| 樣品數 Sample Size | 1PCS | 交貨數量 Incoming Qty. | ／ | 交貨批號 LOT NO. | ／ |

| 外觀檢驗 Cosmetic Inspection | 抽樣標準 Sampling criteria | MIL-STD-105E ( II ) | 抽樣方式 Sampling method | ☑ 正常Normal ☐ 加嚴Tightened ☐ 減量Reduced | AQL | CRI | MAJ 0.40% | MIN 0.65% | 不良說明： Failure Description: |
|---|---|---|---|---|---|---|---|---|---|
| | | | | | AC/RE | 0 | 0 | 0 | |
| | | | | | 不良數 Defect Qty. | 0 | 0 | 0 | |

| 單位 Unit | 樣本數 Sample size | 不良數 Defect Qty. | 不良率(%) Defect Rate | 外觀檢驗結果 Visual Insp. Result | OK |
|---|---|---|---|---|---|
| PCS | 1 | 0 | 0.00% | | |

| 分類 \ 結果 | 檢驗項目 Insp. Item | 規格值及公差 Spec/Tol (mm) | 檢驗工具 Insp.Tool | 檢驗結果（Inspection Result） Sample 1 | Sample 2 | Sample 3 | Sample 4 | Sample 5 | 判定 Result |
|---|---|---|---|---|---|---|---|---|---|
| 尺寸檢驗 Dimension Insp. | 1 | 13.0 REF. | A | 12.062 | | | | | ☑OK ☐NG |
| | 2 | 17.3±0.25 | B | 17.36 | | | | | ☑OK ☐NG |
| | 3 | 17.9±0.25 | B | 17.83 | | | | | ☑OK ☐NG |
| | 4 | 13.30±0.15 | A | 13.352 | | | | | ☑OK ☐NG |
| | 5 | 14.15±0.15 | A | 14.174 | | | | | ☑OK ☐NG |
| | 6 | 0.20±0.05 | B | 0.23 | | | | | ☑OK ☐NG |
| | 7 | 3.32 REF. | A | 3.354 | | | | | ☑OK ☐NG |
| | 8 | 4.75±0.15 | A | 4.762 | | | | | ☑OK ☐NG |
| | 9 | 0.80±0.15 | A | 0.799 | | | | | ☑OK ☐NG |
| | 10 | 0.40±0.05 | B | 0.37 | | | | | ☑OK ☐NG |
| | 11 | 0.50±0.15 | A | 0.496 | | | | | ☑OK ☐NG |
| | 12 | 1.00±0.15 | A | 0.996 | | | | | ☑OK ☐NG |
| | 13 | 9.00±0.15 | A | 9.015 | | | | | ☑OK ☐NG |
| | 14 | 12.00±0.15 | A | 12.010 | | | | | ☑OK ☐NG |
| | 15 | 16.10±0.15 | A | 16.068 | | | | | ☑OK ☐NG |
| | 16 | 16.50±0.15 | B | 16.47 | | | | | ☑OK ☐NG |
| | 17 | 2.15 +0.15-0.25 | A | 2.166 | | | | | ☑OK ☐NG |
| | 18 | 2.1~3.0 REF. | A | 2.122 | | | | | ☑OK ☐NG |
| | 19 | 2.00±0.15 | B | 2.12 | | | | | ☑OK ☐NG |
| | 20 | 1.00±0.10 | B | 0.99 | | | | | ☑OK ☐NG |
| | 21 | 1.85±0.15 | A | 1.789 | | | | | ☑OK ☐NG |
| | 22 | 6.75±0.15 | A | 6.781 | | | | | ☑OK ☐NG |
| | 23 | 2.05±0.15 | A | 2.018 | | | | | ☑OK ☐NG |
| | 24 | 1.50±0.10 | B | 1.50 | | | | | ☑OK ☐NG |
| | 25 | 11.0±0.25 | A | 11.182 | | | | | ☑OK ☐NG |
| | 26 | 6.10±0.15 | B | 6.07 | | | | | ☑OK ☐NG |
| | 27 | Ø1.20±0.10 | B | 1.17 | | | | | ☑OK ☐NG |
| | 28 | 17.0±0.25 | A | 16.913 | | | | | ☑OK ☐NG |
| | 29 | 2.4±0.25 | B | 2.37 | | | | | ☑OK ☐NG |
| | 30 | 10.40±0.15 | A | 10.512 | | | | | ☑OK ☐NG |
| | 31 | 10.50±0.15 | A | 10.487 | | | | | ☑OK ☐NG |
| | 32 | 0.50±0.15 | A | 0.428 | | | | | ☑OK ☐NG |
| | 33 | 9.50±0.15 | A | 9.452 | | | | | ☑OK ☐NG |
| | 34 | 0.5 REF. | B | 0.91 | | | | | ☑OK ☐NG |
| | 35 | 5.76±0.15 | A | 5.745 | | | | | ☑OK ☐NG |
| | 36 | 15.90 REF. | B | 14.54 | | | | | ☑OK ☐NG |
| | 37 | 12.95 REF. | B | 12.89 | | | | | ☑OK ☐NG |
| | 38 | 9.70 REF. | B | 9.658 | | | | | ☑OK ☐NG |
| | 39 | 0.9±0.25 | B | 0.88 | | | | | |
| | | | | | | | | | |
| RoHS及其它項目檢驗 RoHS/ot | | | | | | | | | |
| | | | | | | | | | |
| | | | | | | | | | |

| | | | | | | | 最終判定 Final Result |
|---|---|---|---|---|---|---|---|
| A:投影儀 | E:臥式推拉力計 | I: 耐壓測試機 | | M:卷尺 | Q:2.5次元 | | |
| B:卡尺 | F:自動插拔力試驗機 | J:微歐姆計 | | N:螺紋環規 | R:迴焊爐 | | |
| C:分厘卡 | G:錫爐 | K:超絕緣計 | | O:螺紋栓規 | S:電測機 | | ☑OK ☐NG |
| D:治具 | H:高溫.恆溫試驗機 | L:立式推拉力計 | | P:深度規 | T:螺紋栓規 | | |

核准： Appd by:　　審核： Checked by:　　檢驗員： Inspector:

PDF-XChange Viewer Click to buy NOW! www.docu-track.com

# 東莞肯上精密五金有限公司

DongGuan Astron Precision Hardware CO.,LTD

## 產品檢驗報告

| 料號 Material PN | | 699FA20-0N009A-H | | 客戶料號 Customer PN | 2B.C0133.091 | | 日期 Date | | 2015/10/14 |
|---|---|---|---|---|---|---|---|---|---|
| 樣品數 Sample Size | | 1PCS | | 交貨數量 Incoming Qty. | ／ | | 交貨批號 LOT NO. | | ／ |
| 外觀檢驗 Cosmetic Inspection | 抽樣標准 Sampling criteria | MIL-STD-105E ( II ) | 抽樣方式 Sampling method | ☑ 正常Normal<br>☐ 加嚴Tightened<br>☐ 減量Reduced | AQL | CRI | MAJ 0.40% | MIN 0.65% | 不良說明： Failure Description: |
| | | | | | AC/RE | 0 | 0 | 0 | |
| | | | | | 不良數 Defect Qty. | 0 | 0 | 0 | |
| | 單位 Unit | 樣本數 Sample size | 不良數 Defect Qty. | 不良率(%) Defect Rate | 外觀檢驗結果 Visual Insp. Result | | OK | | |
| | PCS | 1 | 0 | 0.00% | | | | | |

## 外觀尺寸圖

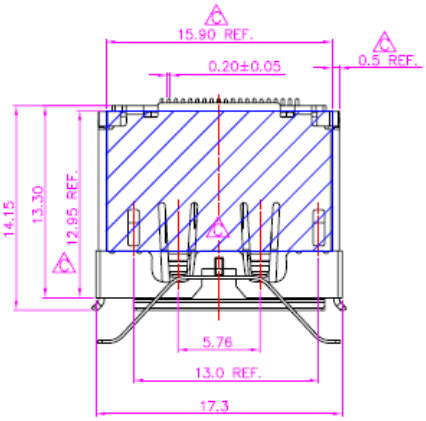


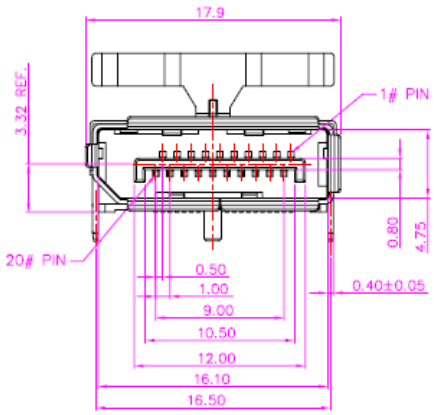


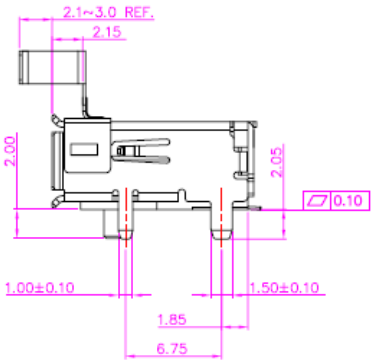


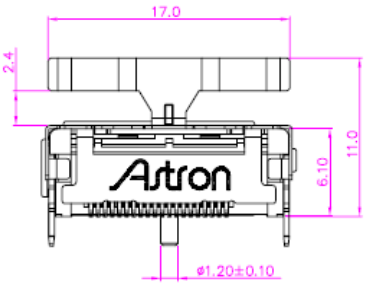


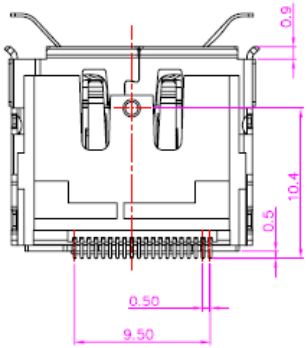

PDF-XChange Viewer Click to buy NOW! www.docu-track.com

# 東莞肯上精密五金有限公司

DongGuan Astron Precision Hardware CO.,LTD

## 產品檢驗報告

| 料號 Material PN | | 699FA20-0N009A-H | | 客戶料號 Customer PN | 2B.C0133.091 | | 日期 Date | | 2015/10/14 |
|---|---|---|---|---|---|---|---|---|---|
| 樣品數 Sample Size | | 1PCS | | 交貨數量 Incoming Qty. | ／ | | 交貨批號 LOT NO. | | ／ |
| 外觀檢驗 Cosmetic Inspection | 抽樣標准 Sampling criteria | MIL-STD-105E ( II ) | 抽樣方式 Sampling method | ☑ 正常Normal<br>☐ 加嚴Tightened<br>☐ 減量Reduced | AQL | CRI | MAJ 0.40% | MIN 0.65% | 不良說明：Failure Description: |
| | | | | | AC/RE | 0 | 0 | 0 | |
| | | | | | 不良數 Defect Qty. | 0 | 0 | 0 | |
| | 單位 Unit | 樣本數 Sample size | 不良數 Defect Qty. | 不良率(%) Defect Rate | 外觀檢驗結果 Visual Insp. Result | | OK | | |
| | PCS | 1 | 0 | 0.00% | | | | | |

## 實物照片與Spec圖片比對

**Top side**



Spec drawing

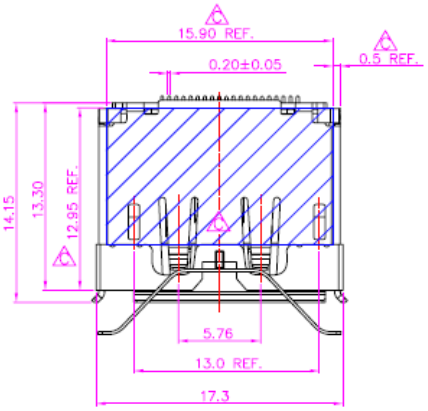


**Rear side**



Spec drawing

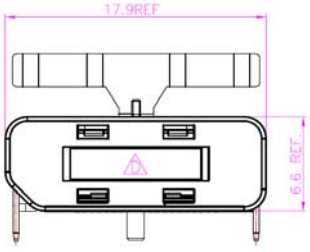


**Bottom side**

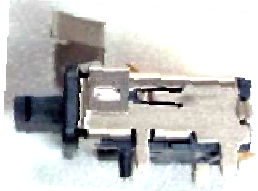

Spec drawing

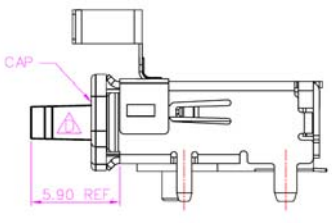


| Result: | PASS | Prepared By: | 張紀君 | Review By: | 韓姿色 |
|---|---|---|---|---|---|

PDF-XChange Viewer Click to buy NOW! www.docu-track.com

**P/N : 699FA20-0N009A-H**



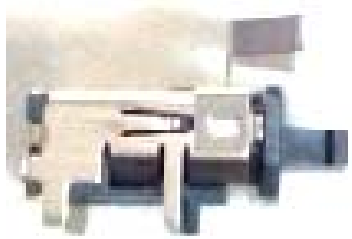









PDF-XChange Viewer Click to buy NOW! www.docu-track.com

PDF-XChange Viewer Click to buy NOW! www.docu-track.com

# 東莞肯上精密五金有限公司
# DongGuan Astron Precision Hardware Co.,LTD
## 電氣性能測試報告
## Electrical Performance Test Report

| | | | | | |
|---|---|---|---|---|---|
| 客 戶 Customer Name | ---- | 產品名稱 Product Name | DISPLAY PORT | | |
| 批 號 LOT NO. | ---- | 產品料號 Part NO. | 699FA20-0N009A-H | | |
| 批 量 LOT Q'TY | ---- | 樣品數量 Sample Q'TY | 2PCS | 樣品狀況 Sample Status | 正常[Normal] |
| 開始檢驗日期 Start Test Date | 2015/10/16 | 送檢單位 Applicant | 業務 | 工令批號 Order NO. | ---- |
| 完成檢驗日期 Finish Test Date | 2015/10/18 | 檢驗結論 Conclusion of Test | 本檢驗報告共檢驗 4 項。 [ The inspection report include 4 test items。] 所檢驗之項目 符合EIA-364-23&EIA-364-21& EIA-364-20要求。 [ All test items accorded with EIA-364-23&EIA-364-21& EIA-364-20。] | | |
| 檢驗依據 Test Standards | EIA-364-23&EIA-364-21& EIA-364-20 | | | | |
| 檢驗地點 Test place | 肯上品保實驗室 [Astron .QA lab] | | | | |

電氣性能測試設備:超絕緣計;耐壓測試儀;微歐姆計
[Electrical Performance Test Equipment:Super Megohm Meter;Withstanding Voltage Tester ; Milli-OHM meter]

測試條件: 接觸阻抗:20mV Max,100mA [Contact Resistance(Low level):20mV Max,100mA]
[Test Procedures:] 絕緣阻抗:100MΩ Min at 500V DC;[Insulation Resistance:100MΩ Min at 500V DC;]
耐電壓: 500V AC (R.M.S.)持續 1分鐘;[Dielectric Withstanding Voltage: at 500V AC (R.M.S.) for 1 minute.]

| | 測試項目 Test Item | 測試條件 Test Condition | 檢測設備 Inspection Equipment | 測試結果 Test Result | | | | | | | | 判定Result OK | NG |
|---|---|---|---|---|---|---|---|---|---|---|---|---|---|
| 1 | 外觀 [Appearance] | 無明顯損傷現象 [No evidence of physical damage.] | A | 符合要求[accorded with requirements] | | | | | | | | ✓ | |
| 2 | 絕緣阻抗 [Insulation Resistance] | 100 MΩ MIN | B | 樣品 [sample] | 1# | | | 2# | | | | | |
| | | | | 結果 [result] | OK | | | OK | | | | ✓ | |
| 3 | 耐電壓 [Dielectric Withstanding Voltage] | 500 V AC | C | 樣品 [sample] | 1# | | | 2# | | | | | |
| | | | | 結果 [result] | OK | | | OK | | | | ✓ | |
| 4 | 接觸阻抗 [Contact Resistance (Low level)] | Contact: 30mΩ Max. Shell: 50mΩ Max. | D | 樣品 [sample] | 1# | | | 2# | | | | | |
| | | | | PIN | | | | | | | | | |
| | | | | 1p | 3.4 | 11p | 3.7 | 1p | 3.8 | 11p | 4.1 | ✓ | |
| | | | | 2p | 4.0 | 12p | 4.1 | 2p | 3.9 | 12p | 3.9 | ✓ | |
| | | | | 3p | 3.8 | 13p | 4.2 | 3p | 3.8 | 13p | 3.8 | ✓ | |
| | | | | 4p | 3.7 | 14p | 3.6 | 4p | 4.2 | 14p | 4.0 | ✓ | |
| | | | | 5p | 3.6 | 15p | 3.7 | 5p | 4.3 | 15p | 4.2 | ✓ | |
| | | | | 6p | 3.7 | 16p | 3.6 | 6p | 3.7 | 16p | 4.3 | ✓ | |
| | | | | 7p | 3.8 | 17p | 3.5 | 7p | 3.8 | 17p | 4.1 | ✓ | |
| | | | | 8p | 4.1 | 18p | 3.6 | 8p | 3.9 | 18p | 4.2 | ✓ | |
| | | | | 9p | 3.9 | 19p | 3.8 | 9p | 4.3 | 19p | 4.3 | ✓ | |
| | | | | 10p | 3.8 | 20p | 3.9 | 10p | 4.2 | 20p | 3.9 | ✓ | |
| | | | | | | shell | 2.6 | | | shell | 2.7 | ✓ | |

備注:測試設備A:顯微鏡 B超絕緣計 C:耐壓測試儀 D:微歐姆計
[remark: Test Equipment A: microscopes B:Super Megohm Meter C:Withstanding Voltage Tester D:Milli-OHM meter]

批 准: Approved by: 傅學敏 審 核: Checked by: 朱平 測試員: Test by: 吳才群

PDF-XChange Viewer Click to buy NOW! www.docu-track.com

# 東莞肯上精密五金有限公司

## DongGuan Astron Precision Hardware Co.,LTD.

## 插拔力測試報告

## Insertion&Withdrawal Force Test Report

| | | | | | |
|---|---|---|---|---|---|
| 客 戶<br>Customer Name | ---- | 產品名稱<br>Product Name | DISPLAYPORT | | |
| 批 號<br>LOT NO. | ---- | 產品料號<br>Part NO. | 699FA20-0N009A-H | | |
| 批 量<br>LOT Q'TY | ---- | 樣本數量<br>Sample Q'TY | 2 PCS | 樣品狀況<br>Codition | 正常<br>[Normal] |
| 開始檢驗日期<br>Start Test Date | 2015/10/19 | 送檢單位<br>Applicant | 業務 | 工令批號<br>Order NO. | ---- |
| 完成檢驗日期<br>Finish Test Date | 2015/10/20 | 檢驗結論<br>Conclusion of Test | 本檢驗報告共檢驗 2 項。<br>[The inspection report include 2 test items。]<br>所檢驗之項目 符合 EIA-364-13要求。<br>[All test items accorded with EIA-364-13。] | | |
| 檢驗依據<br>Test Standards | EIA-364-13 | | | | |
| 檢驗地點<br>Test place | 肯上品保實驗室<br>[Astron .QA lab] | | | | |

試驗設備: 自動插拔力試驗機 Test equipment: automatic test machine Plug

測試條件:以25mm 每分鐘的速度測試插拔力.
[Measure forces necessary to push terminal.(speed:minute,displacement:25mm)]

| 檢驗項目<br>Test Item | | 技術要求<br>Test Condition | 檢驗設備<br>Inspection Equipment | 檢驗結果<br>Test Result | | | | | | | | 判定[Judge] | |
|---|---|---|---|---|---|---|---|---|---|---|---|---|---|
| | | | | | | | | | | | | OK | NG |
| 1 | 外觀檢測<br>[Appearance] | 產品表面無明顯損傷<br>[No evidence of physical damage.] | A | 符合要求<br>[accorded with requirements] | | | | | | | | ✓ | |
| 2 | 插拔力<br>[Insertion&Withdrawal Force] | 插入力:4.50kgf 最大 .<br>[insertion force4.50kgf Max]<br>拔出力:1.0~4.0kgf .<br>[Withdrawal Force1.0~4.0kgf ] | B | 結果<br>[result] | 1# | | 2# | | | | | | |
| | | | | | 測試[test] | | 測試[test] | | | | | | |
| | | | | 次數<br>[time] | 插入 | 拔出 | 插入 | 拔出 | | | | | |
| | | | | 1 | 0.97 | 1.73 | 1.12 | 1.70 | | | | ✓ | |
| | | | | 2 | 0.95 | 1.71 | 1.15 | 1.70 | | | | ✓ | |
| | | | | 3 | 0.94 | 1.71 | 1.19 | 1.70 | | | | ✓ | |
| | | | | 4 | 0.95 | 1.74 | 1.27 | 1.70 | | | | ✓ | |
| | | | | 5 | 0.97 | 1.76 | 1.33 | 1.71 | | | | ✓ | |
| | | | | 6 | 1.02 | 1.78 | 1.36 | 1.72 | | | | ✓ | |
| | | | | 7 | 1.05 | 1.80 | 1.39 | 1.73 | | | | ✓ | |
| | | | | 8 | 1.09 | 1.83 | 1.42 | 1.73 | | | | ✓ | |
| | | | | 9 | 1.15 | 1.83 | 1.45 | 1.73 | | | | ✓ | |
| | | | | 10 | 1.18 | 1.86 | 1.49 | 1.77 | | | | ✓ | |

備註: A:實體顯微鏡 B:自動插拔力試驗機

Note: A: microscopic entities B: Plug automatic test machine

批 准: Approved by: 傅學敏　　審 核: Checked by: 朱平　　測試人: Test by: 吳才群

PDF-XChange Viewer Click to buy NOW! www.docu-track.com

# 東莞肯上精密五金有限公司

## DongGuan Astron Precision Hardware Co.,LTD

## 耐久性測試報告

## Durability Performance Test Report

| | | | | | |
|---|---|---|---|---|---|
| 客 戶 Customer Name | ---- | 產品名稱 Product Name | DISPLAYPORT | | |
| 批 號 LOT NO. | ---- | 產品料號 Part NO. | 699FA20-0N009A-H | | |
| 批 量 LOT Q'TY | ---- | 樣品數量 Sample Q'TY | 2PCS | 樣品狀況 Sample Status | 正常[Normal] |
| 開始檢驗日期 Start Test Date | 2015/10/19 | 送檢單位 Applicant | 業務 | 工令批號 Order NO. | ---- |
| 完成檢驗日期 Finish Test Date | 2015/10/25 | 檢驗結論 Conclusion of Test | 本檢驗報告共檢驗 2 項。<br>[The inspection report include 2 test items。]<br>所檢驗之項目 符合 EIA-364-09要求。<br>[All test items accorded with EIA-364-09。] | | |
| 檢驗依據 Test Standards | EIA-364-09 | | | | |
| 檢驗地點 Test place | 肯上品保實驗室 [Astron .QA lab] | | | | |

試驗設備: 自動插拔力試驗機 Test equipment: automatic test machine Plug

測試條件:以最快100+/-50次/小時的速率測試公母座插入及拔出10000次.
[Mate and unmate samples for100+/-50 cycles at maximum rate of 10000 cycles per hour.]

| 測試項目 Test Item | | 測試條件 Test Condition | 檢測設備 Inspection Equipment | 測試結果 Test Result | | | | | 判定Result | |
|---|---|---|---|---|---|---|---|---|---|---|
| | | | | | | | | | OK | NG |
| 1 | 外觀 [Appearance] | 無明顯損傷現象 [No evidence of physical damage.] | A | 符合要求[accorded with requirements] | | | | | ✓ | |
| 2 | 接觸阻抗 [Contact Resistance (Low level)] | .接觸阻抗:30mΩ 最大 (最終) [Contact resistance: 30mΩ Max. (Finally)] | B | 結果 [result] | 1# 測試[test] | | 2# 測試[test] | | | |
| | | | | PIN | 前[before] | 后[after] | 前[before] | 后[after] | | |
| | | | | 1P | 3.4 | 4.4 | 3.8 | 4.8 | ✓ | |
| | | | | 2P | 4.0 | 4.2 | 3.9 | 4.7 | ✓ | |
| | | | | 3P | 3.8 | 4.1 | 3.8 | 4.9 | ✓ | |
| | | | | 4P | 3.7 | 4.4 | 4.2 | 5.0 | ✓ | |
| | | | | 5P | 3.6 | 4.8 | 4.3 | 4.6 | ✓ | |
| | | | | 6P | 3.7 | 4.6 | 3.7 | 4.8 | ✓ | |
| | | | | 7P | 3.8 | 4.7 | 3.8 | 4.8 | ✓ | |
| | | | | 8P | 4.1 | 4.8 | 3.9 | 4.9 | ✓ | |
| | | | | 9P | 3.9 | 4.6 | 4.3 | 4.9 | ✓ | |
| | | | | 10P | 3.8 | 4.5 | 4.2 | 5.1 | ✓ | |
| | | | | 11P | 3.7 | 4.4 | 4.1 | 5.2 | ✓ | |
| | | | | 12P | 4.1 | 4.6 | 3.9 | 5.0 | ✓ | |
| | | | | 13P | 4.2 | 4.7 | 3.8 | 4.8 | ✓ | |
| | | | | 14P | 3.6 | 4.8 | 4.0 | 4.9 | ✓ | |
| | | | | 15P | 3.7 | 4.6 | 4.2 | 4.8 | ✓ | |
| | | | | 16P | 3.6 | 4.5 | 4.3 | 4.8 | ✓ | |
| | | | | 17P | 3.5 | 4.6 | 4.1 | 5.1 | ✓ | |
| | | | | 18P | 3.6 | 4.7 | 4.2 | 5.2 | ✓ | |
| | | | | 19P | 3.8 | 4.6 | 4.3 | 4.8 | ✓ | |
| | | | | 20P | 3.9 | 4.7 | 3.9 | 4.6 | ✓ | |

備注:測試設備A:顯微鏡 B:微歐姆計 C:自動插拔力試驗機
remark: Test Equipment A: microscopes B:Milli-OHM meter C: Plug automatic test machine

| 批 准: Approved by: | 傅學敏 | 審 核: Checked by: | 朱平 | 檢驗員: Test by: | 吳才群 |
|---|---|---|---|---|---|

PDF-XChange Viewer Click to buy NOW! www.docu-track.com

# 東莞肯上精密五金有限公司
DongGuan Astron Precision Hardware Co.,LTD.

## 振動測試報告
## Vibration Performance Test Report

| | | | | | |
|---|---|---|---|---|---|
| 客 戶 Customer Name | ---- | 產品名稱 Product Name | DISPLAY PORT | | |
| 批 號 LOT NO. | ---- | 產品料號 Part NO. | 699FA20-0N009A-H | | |
| 批 量 LOT Q'TY | ---- | 樣品數量 Sample Q'TY | 2 PCS | 樣品狀況 Codition | 正常 [Normal] |
| 開始檢驗日期 Start Test Date | 2015/10/21 | 送檢單位 Applicant | 業務 | 工令批號 Order NO. | ---- |
| 完成檢驗日期 Finish Test Date | 2015/10/22 | 檢驗結論 Conclusion of Test | 本檢驗報告共檢驗 3 項。 [The test report include 3 test items.] 所檢驗之項目 符合EIA-364-28之要求。 [All test items accorded withEIA-364-28.] | | |
| 檢驗依據 Test Standards | EIA-364-28 | | | | |
| 檢驗地點 Test place | 肯上品保實驗室 [Astron .QA lab] | | | | |

振動測試:Vibration
試驗設備:電動式高頻振動測試臺Test equipment: high-frequency electro-dynamic vibration test bed

測試條件:Test Procedures:

振動的頻率爲50~2000~50Hz,平均每20分鐘一個循環,每一個軸向振動爲4小時,共計3個軸向,(總數12小時)
振輻:1.52mm 最大
The entire frequency range, from 50 to 2000Hz and return to 50Hz shall be traversed in approximately 20minutes.This motion shall be applied for 4hour in each of 3 mutually perpendicular directions.(total of 12hours)
Amplitude:1.52mm Max.

實際測試圖形:The actual test pattern:

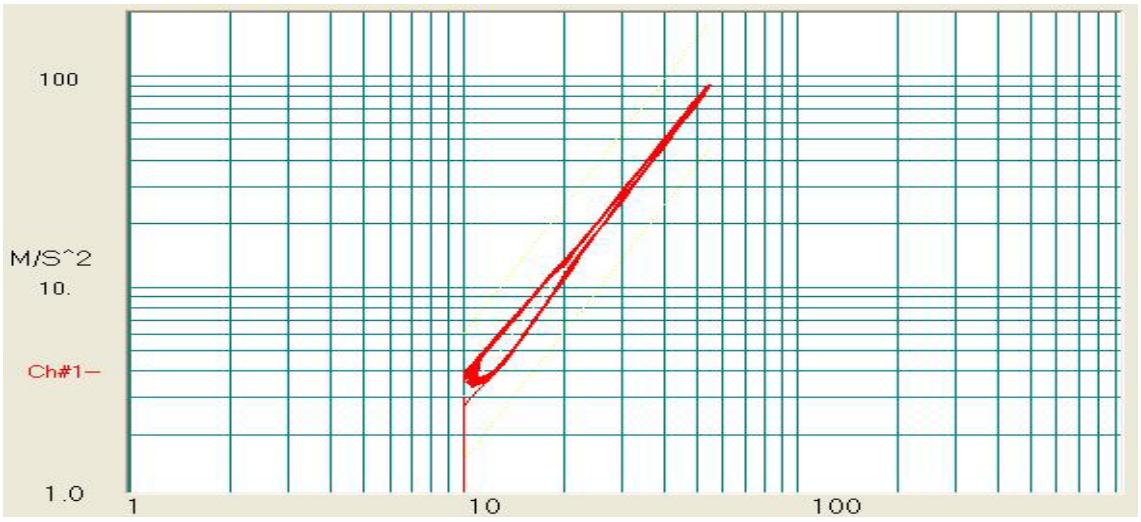


| | 檢驗項目 Test Item | 技術要求 Test Condition | 試驗設備 [Inspection] | 檢驗結果 Test Result | 單項評價 [Result] OK | NG |
|---|---|---|---|---|---|---|
| 1 | 外觀檢測 Detection of appearance | 產品表面無明顯損傷[No evidence of physical damage.] | A | 符合要求[accorded with requirements] | ✓ | |
| 2 | 斷路檢測Open circuit detection | 斷路時間小於1微秒;Opening time is less than 1 microsecond | B | 符合要求[accorded with requirements] | ✓ | |

備註: A:實體顯微鏡 B:斷路測試器 C:超絕緣計 D:微歐姆計
[Note: A: microscopic entities B: circuit tester C:Super Megohm Meter D:Milli-OHM meter]

批 准: Approved by: 傅學敏　審 核: Checked by: 朱平　檢驗員: Test by: 吳才群

PDF-XChange Viewer Click to buy NOW! www.docu-track.com

# 東莞肯上精密五金有限公司
DongGuan Astron Precision Hardware Co.,LTD.

## 振動測試報告
## Vibration Performance Test Report

| | | | | | |
|---|---|---|---|---|---|
| 客 戶 Customer Name | ---- | 產品名稱 Product Name | DISPLAY PORT | | |
| 批 號 LOT NO. | ---- | 產品料號 Part NO. | 699FA20-0N009A-H | | |
| 批 量 LOT Q'TY | ---- | 樣品數量 Sample Q'TY | 2 PCS | 樣品狀況 Codition | 正常 [Normal] |
| 開始檢驗日期 Start Test Date | 2015/10/21 | 送檢單位 Applicant | 業務 | 工令批號 Order NO. | ---- |
| 完成檢驗日期 Finish Test Date | 2015/10/22 | 檢驗結論 Conclusion of Test | 本檢驗報告共檢驗 3 項。<br>[The test report include 3 test items.]<br>所檢驗之項目 符合EIA-364-28之要求。<br>[All test items accorded withEIA-364-28。] | | |
| 檢驗依據 Test Standards | EIA-364-28 | | | | |
| 檢驗地點 Test place | 肯上品保實驗室 [Astron .QA lab] | | | | |

振動測試:Vibration
試驗設備:重動式高頻振動測試臺Test equipment: high-frequency electro-dynamic vibration test bed

測試條件:Test Procedures:

振動的頻率爲50~2000~50Hz,平均每20分鐘一個循環,每一個軸向振動爲4小時,共計3個軸向,(總數12小時)
振幅:1.52mm 最大
The entire frequency range, from 50 to 2000Hz and return to 50Hz shall be traversed in approximately 20minutes.This motion shall be applied for 4hour in each of 3 mutually perpendicular directions.(total of 12hours)
Amplitude:1.52mm Max.

| | | | | 樣品 [Sample] | 1# 測試[test] | | 2# 測試[test] | | | |
|---|---|---|---|---|---|---|---|---|---|---|
| | | | | PIN | 前[before] | 后[after] | 前[before] | 后[after] | | |
| 4 | 接觸阻抗 [Contact Resistance (Low level)] | 接觸阻抗:30mΩ 最大(最終) [Contact resistance: 30mΩ Max. (Finally)] | D | 1P | 3.8 | 4.4 | 3.8 | 4.4 | ✓ | |
| | | | | 2P | 3.9 | 4.8 | 3.8 | 4.0 | ✓ | |
| | | | | 3P | 4.0 | 4.6 | 4.0 | 4.2 | ✓ | |
| | | | | 4P | 4.1 | 4.3 | 3.9 | 4.5 | ✓ | |
| | | | | 5P | 4.2 | 4.5 | 3.7 | 3.9 | ✓ | |
| | | | | 6P | 3.8 | 4.1 | 3.8 | 4.3 | ✓ | |
| | | | | 7P | 3.9 | 4.6 | 3.9 | 4.1 | ✓ | |
| | | | | 8P | 4.0 | 4.2 | 4.0 | 4.3 | ✓ | |
| | | | | 9P | 4.1 | 4.5 | 4.1 | 4.2 | ✓ | |
| | | | | 10P | 3.8 | 4.1 | 3.8 | 4.3 | ✓ | |
| | | | | 11P | 3.9 | 4.2 | 3.9 | 4.1 | ✓ | |
| | | | | 12P | 4.0 | 4.3 | 4.0 | 4.2 | ✓ | |
| | | | | 13P | 4.1 | 4.4 | 4.1 | 4.4 | ✓ | |
| | | | | 14P | 4.2 | 4.5 | 4.2 | 4.3 | ✓ | |
| | | | | 15P | 4.3 | 4.4 | 3.8 | 4.2 | ✓ | |
| | | | | 16P | 4.1 | 4.3 | 3.9 | 4.1 | ✓ | |
| | | | | 17P | 3.8 | 4.1 | 3.8 | 4.3 | ✓ | |
| | | | | 18P | 3.9 | 4.2 | 3.9 | 4.0 | ✓ | |
| | | | | 19P | 3.8 | 4.1 | 4.0 | 4.1 | ✓ | |
| | | | | 20P | 3.9 | 4.3 | 4.1 | 4.6 | ✓ | |

備註: A:實體顯微鏡 B:斷路測試器 C:超絕緣計 D:微歐姆計
[Note: A: microscopic entities B: circuit tester C:Super Megohm Meter D:Milli-OHM meter]

| | | | | | |
|---|---|---|---|---|---|
| 批 准: Approved by: | 傅學敏 | 審 核: Checked by: | 朱平 | 檢驗員: Test by: | 吳才群 |

PDF-XChange Viewer Click to buy NOW! www.docu-track.com

# 東莞肯上精密五金有限公司

## DongGuan Astron Precision Hardware Co.,LTD

## 可焊性測試報告
## Solderability Test Report

| | | | | | |
|---|---|---|---|---|---|
| 客 戶<br>Customer Name | ---- | 產品名稱<br>Product Name | DISPLAYPORT | | |
| 批 號<br>LOT NO. | ---- | 產品料號<br>Part NO. | 699FA20-0N009A-H | | |
| 批 量<br>LOT Q'TY | ---- | 樣品數量<br>Sample Q'TY | 2PCS | 樣品狀況<br>Sample Status | 正常[Normal] |
| 開始檢驗日期<br>Start Test Date | 2015/10/23 | 送檢單位<br>Applicant | 業務 | 工令批號<br>Order NO. | ---- |
| 完成檢驗日期<br>Finish Test Date | 2015/10/23 | 檢驗結論<br>Conclusion of Test | 本檢驗報告共檢驗 2 項。<br>[The test report include 2 test items.]<br>所檢驗之項目 符合MIL-STD-202F,Method 208 要求。<br>[All test items accorded with MIL-STD-202F,Method 208 .] | | |
| 檢驗依據<br>Test Standards | MIL-STD-202F,Method 208 | | | | |
| 檢驗地點<br>Test place | 肯上品保實驗室<br>[Astron .QA lab] | | | | |

可焊性測試設備:錫爐
[Solderability Test Equipment:Tin bath]

測試條件:沾5~10秒助焊劑後,再將引腳置入 245°C ± 5°C的錫槽內5 ± 0.5 秒.
[After 5~10 seconds flux deep. Subject connector lead to solder bath at 245°C ±5°C for 5 ± 0.5 seconds.]

| 測試項目<br>Test Item | | 測試條件<br>Test Condition | 檢測設備<br>Inspection Equipment | 測試結果<br>Test Result | | | | | | 判定Result<br>OK | <br>NG |
|---|---|---|---|---|---|---|---|---|---|---|---|
| 1 | 外觀<br>[Appearance] | 無明顯損傷現象<br>[No evidence of physical damage.] | A | 符合要求[accorded with requirements] | | | | | | ✓ | |
| 2 | 可焊性<br>[Solderability] | 沾錫面積在95%以上<br>[More than 95% of the solderable area shall be covered with solder.] | B | 樣品<br>[Sample] | 1# | 2# | | | | | |
| | | | | 判定<br>[Result] | OK | OK | | | | ✓ | |
| | | | | | | | | | | | |
| | | | | | | | | | | | |
| | | | | | | | | | | | |
| | | | | | | | | | | | |
| | | | | | | | | | | | |
| | | | | | | | | | | | |
| | | | | | | | | | | | |
| | | | | | | | | | | | |
| | | | | | | | | | | | |
| | | | | | | | | | | | |

備注:測試設備:A顯微鏡 B錫爐
[remark: Test Equipment A: microscopes B:Tin bath]

批 准: Approved by: 傅學敏　　審 核: Checked by: 朱平　　檢驗員: Test by: 吳才群

PDF-XChange Viewer Click to buy NOW! www.docu-track.com

# 東莞肯上精密五金有限公司

DongGuan Astron Precision Hardware Co.,LTD

## 高溫壽命性能測試報告

## Temperature Life (Heat) Performance Test Report

| | | | | | |
|---|---|---|---|---|---|
| 客 戶 Customer Name | ---- | 產品名稱 Product Name | DISPLAYPORT | | |
| 批 號 LOT NO. | ---- | 產品料號 Part NO. | 699FA20-0N009A-H | | |
| 批 量 LOT Q'TY | ---- | 樣品數量 Sample Q'TY | 2PCS | 樣品狀況 Sample Status | 正常 [Normal] |
| 開始檢驗日期 Start Test Date | 2015/10/16 | 送檢單位 Applicant | 業務 | 工令批號 Order NO. | ------ |
| 完成檢驗日期 Finish Test Date | 2015/10/27 | 檢驗結論 Conclusion of Test | 本檢驗報告共檢驗 3 項。<br>[The inspection report include 3 test items。]<br>所檢驗之項目 符合 EIA-364-17 Condition4, MethodA要求。<br>All test items accorded with EIA-364-17 Condition4, MethodA。 | | |
| 檢驗依據 Test Standards | EIA-364-17 Condition4, MethodA | | | | |
| 檢驗地點 Test place | 肯上品保實驗室 [Astron .QA lab] | | | | |

高溫試驗設備:可程式恆溫恆濕試驗機
[Temperature Life (Heat) Performance Test Equipment:Programmable Temperature&Humidity Chamber]

測試條件:樣品放入溫度爲105±2度的環境中250小時,然后放置在室溫環境中1~2小時.
[The specimens shall be subjected to a temperature of105± 2°C for250hours, then placed in ambient temperature for one to two hours.]

| 測試項目 Test Item | | 測試條件 Test Condition | 檢測設備 Inspection Equipment | 測試結果 Test Result | | | | | | | 判定[Result] | |
|---|---|---|---|---|---|---|---|---|---|---|---|---|
| | | | | | | | | | | | OK | NG |
| 1 | 外觀 [Appearance] | 無明顯損傷現象 [No evidence of physical damage.] | A | 符合要求[accorded with requirements] | | | | | | | ✓ | |
| 2 | 絕緣阻抗 [Insulation Resistance] | 試驗前: 100 MΩ 最小 [before test: 100 MΩ MIN]<br>試驗后: 100 MΩ 最小 [after test: 100 MΩ MIN] | B | 樣品 [Sample] | 1# | | 2# | | | | | |
| | | | | | 測試[test] | | 測試[test] | | | | | |
| | | | | | 前[before] | 后[after] | 前[before] | 后[after] | | | | |
| | | | | 結果 [result] | OK | OK | OK | OK | | | ✓ | |
| 3 | 接觸阻抗 [Contact Resistance (Low level)] | 接觸阻抗:30mΩ 最大(最終) [Contact resistance: 30mΩ Max. (Finally)] | C | 結果 [result] | 1# | | 2# | | | | | |
| | | | | | 測試[test] | | 測試[test] | | | | | |
| | | | | | 前[before] | 后[after] | 前[before] | 后[after] | | | | |
| | | | | 1P | 3.4 | 3.8 | 3.8 | 4.1 | | | ✓ | |
| | | | | 2P | 4.0 | 4.3 | 3.9 | 4.8 | | | ✓ | |
| | | | | 3P | 3.8 | 4.1 | 3.8 | 4.5 | | | ✓ | |
| | | | | 4P | 3.7 | 3.9 | 4.2 | 4.3 | | | ✓ | |
| | | | | 5P | 3.6 | 4.1 | 4.3 | 4.5 | | | ✓ | |
| | | | | 6P | 3.7 | 4.3 | 3.7 | 4.6 | | | ✓ | |
| | | | | 7P | 3.8 | 4.6 | 3.8 | 4.2 | | | ✓ | |
| | | | | 8P | 4.1 | 4.2 | 3.9 | 4.5 | | | ✓ | |
| | | | | 9P | 3.9 | 4.1 | 4.3 | 4.7 | | | ✓ | |
| | | | | 10P | 3.8 | 3.9 | 4.2 | 4.3 | | | ✓ | |
| | | | | 11P | 3.7 | 4.1 | 4.1 | 4.2 | | | ✓ | |
| | | | | 12P | 4.1 | 4.5 | 3.9 | 4.1 | | | ✓ | |
| | | | | 13P | 4.2 | 4.3 | 3.8 | 4.3 | | | ✓ | |
| | | | | 14P | 3.6 | 4.7 | 4.0 | 4.4 | | | ✓ | |
| | | | | 15P | 3.7 | 3.9 | 4.2 | 4.4 | | | ✓ | |
| | | | | 16P | 3.6 | 4.1 | 4.3 | 4.5 | | | ✓ | |
| | | | | 17P | 3.5 | 3.8 | 4.1 | 4.3 | | | ✓ | |
| | | | | 18P | 3.6 | 4.2 | 4.2 | 4.6 | | | ✓ | |
| | | | | 19P | 3.8 | 4.1 | 4.3 | 4.5 | | | ✓ | |
| | | | | 20P | 3.9 | 4.3 | 3.9 | 4.1 | | | ✓ | |

備注:測試設備:A顯微鏡 B:超絕緣計 C:微歐姆計
[remark: Test Equipment A: microscopes B:Super Megohm Meter C:Milli-OHM meter]

批 准: Approved by: 傅學敏　　審 核: Checked by: 朱平　　檢驗員: Test by: 吳才群

PDF-XChange Viewer Click to buy NOW! www.docu-track.com

# 東莞肯上精密五金有限公司
# DongGuan Astron Precision Hardware Co.,LTD
## 耐濕性測試報告
## Humidity Performance Test Report

| | | | | | |
|---|---|---|---|---|---|
| 客 戶 Customer Name | ---- | 產品名稱 Product Name | DISPLAYPORT | | |
| 批 號 LOT NO. | ---- | 產品料號 Part NO. | 699FA20-0N009A-H | | |
| 批 量 LOT Q'TY | ---- | 樣品數量 Sample Q'TY | 2PCS | 樣品狀況 Sample Status | 正常[Normal] |
| 開始檢驗日期 Start Test Date | 2015/10/22 | 送檢單位 Applicant | 業務 | 工令批號 Order NO. | ---- |
| 完成檢驗日期 Finish Test Date | 2015/10/28 | 檢驗結論 Conclusion of Test | 本檢驗報告共檢驗 3 項。<br>[The test report include 3 test items.]<br>所檢驗之項目 符合EIA-364-31 要求。<br>[All test items accorded withEIA-364-31 .] | | |
| 檢驗依據 Test Standards | EIA-364-31 | | | | |
| 檢驗地點 Test place | 肯上品保實驗室 [Astron .QA lab] | | | | |

耐濕性試驗設備:可程式恆溫恆濕試驗機
[Humidity Performance Test Equipment:Programmable Temperature&Humidity Chamber]

測試條件:樣品需要放置在濕度80%~95%之間,溫度在+25~+85之間測試96小時,測試完成後需放置在常溫下24小時.
[The specimens shall be placed in a chamber and subjected to arelative humidity of 80% to 95% and a temperature of +25℃ to +85℃for 96 hours,then placed in ambient temperature for more than 24 hour.]

| | 測試項目 Test Item | 測試條件 Test Condition | 檢測設備 Inspection Equipment | 測試結果 Test Result | | | | | | | 判定[Result] | |
|---|---|---|---|---|---|---|---|---|---|---|---|---|
| | | | | | | | | | | | OK | NG |
| 1 | 外觀 [Appearance] | 無明顯損傷現象 [No evidence of physical damage.] | A | 符合要求[accorded with requirements] | | | | | | | ✓ | |
| 2 | 絕緣阻抗 [Insulation Resistance] | 試驗前: 100 MΩ 最小 [before test: 100 MΩ MIN]<br>試驗后: 100 MΩ 最小 [after test: 100 MΩ MIN] | B | 樣品 [Sample] | 1# | | 2# | | | | | |
| | | | | | 測試[test] | | 測試[test] | | | | | |
| | | | | | 前[before] | 后[after] | 前[before] | 后[after] | | | | |
| | | | | 結果 [result] | OK | OK | OK | OK | | | ✓ | |
| 3 | 接觸阻抗 [Contact Resistance (Low level)] | 接觸阻抗:30mΩ 最大(最終) [Contact resistance: 30mΩ Max. (Finally)] | C | 樣品 [Sample] | 1# | | 2# | | | | | |
| | | | | | 測試[test] | | 測試[test] | | | | | |
| | | | | pin | 前[before] | 后[after] | 前[before] | 后[after] | | | | |
| | | | | 1P | 4.1 | 4.5 | 3.8 | 4.1 | | | ✓ | |
| | | | | 2P | 3.9 | 4.1 | 3.9 | 4.3 | | | ✓ | |
| | | | | 3P | 3.8 | 4.1 | 3.7 | 4.2 | | | ✓ | |
| | | | | 4P | 3.9 | 4.0 | 4.2 | 4.5 | | | ✓ | |
| | | | | 5P | 3.7 | 4.2 | 4.1 | 4.3 | | | ✓ | |
| | | | | 6P | 4.2 | 4.6 | 4.1 | 4.4 | | | ✓ | |
| | | | | 7P | 4.1 | 4.8 | 4.0 | 4.5 | | | ✓ | |
| | | | | 8P | 3.8 | 4.5 | 4.3 | 4.6 | | | ✓ | |
| | | | | 9P | 3.7 | 4.0 | 4.2 | 4.7 | | | ✓ | |
| | | | | 10P | 3.8 | 4.5 | 4.1 | 4.3 | | | ✓ | |
| | | | | 11P | 3.9 | 4.3 | 4.0 | 4.5 | | | ✓ | |
| | | | | 12P | 3.8 | 4.1 | 3.9 | 4.1 | | | ✓ | |
| | | | | 13P | 3.9 | 4.2 | 3.8 | 4.2 | | | ✓ | |
| | | | | 14P | 4.0 | 4.6 | 3.7 | 4.0 | | | ✓ | |
| | | | | 15P | 4.1 | 4.3 | 3.6 | 4.3 | | | ✓ | |
| | | | | 16P | 4.2 | 4.5 | 3.8 | 4.1 | | | ✓ | |
| | | | | 17P | 4.1 | 4.3 | 4.2 | 4.4 | | | ✓ | |
| | | | | 18P | 4.3 | 4.7 | 4.1 | 4.3 | | | ✓ | |
| | | | | 19P | 4.1 | 4.3 | 4.0 | 4.5 | | | ✓ | |
| | | | | 20P | 4.2 | 4.4 | 3.9 | 4.6 | | | ✓ | |

備注:測試設備:A顯微鏡 B:超絕緣計 C:微歐姆計
[remark: Test Equipment A: microscopes B:Super Megohm Meter C:Milli-OHM meter]

批 准: Approved by: 傅學敏　　審 核: Checked by: 朱平　　檢驗員: Test by: 吳才群

PDF-XChange Viewer Click to buy NOW! www.docu-track.com

# 東莞肯上精密五金有限公司

## DongGuan Astron Precision Hardware Co.,LTD

## 耐焊接熱測試報告

## Resistance to Soldering heat Performance Test Report

| | | | | | |
|---|---|---|---|---|---|
| 客 戶<br>Customer Name | ---- | 產品名稱<br>Product Name | DISPLAYPORT | | |
| 批 號<br>LOT NO. | ---- | 產品料號<br>Part NO. | 699FA20-0N009A-H | | |
| 批 量<br>LOT Q'TY | ---- | 樣品數量<br>Sample Q'TY | 2PCS | 樣品狀況<br>Sample Status | 正常[Normal] |
| 開始檢驗日期<br>Start Test Date | 2015/10/29 | 送檢單位<br>Applicant | 業務 | 工令批號<br>Order NO. | ---- |
| 完成檢驗日期<br>Finish Test Date | 2015/10/29 | 檢驗結論<br>Conclusion of Test | 本檢驗報告共檢驗 1 項。<br>[The inspection report include 1 test items。]<br>所檢驗之項目 符合Ourself technology Requirements 要求。<br>[All test items accorded with Ourself technology Requirements 。] | | |
| 檢驗依據<br>Test Standards | 廠內技術要求<br>[Ourself technology Requirements] | | | | |
| 檢驗地點<br>Test place | 肯上品保實驗室<br>[Astron .QA lab] | | | | |

耐焊熱測試設備:回焊爐

[Resistance to Soldering heat Performance Test Equipment:IR-reflow]

實際測試曲線[In fact Test photo:]

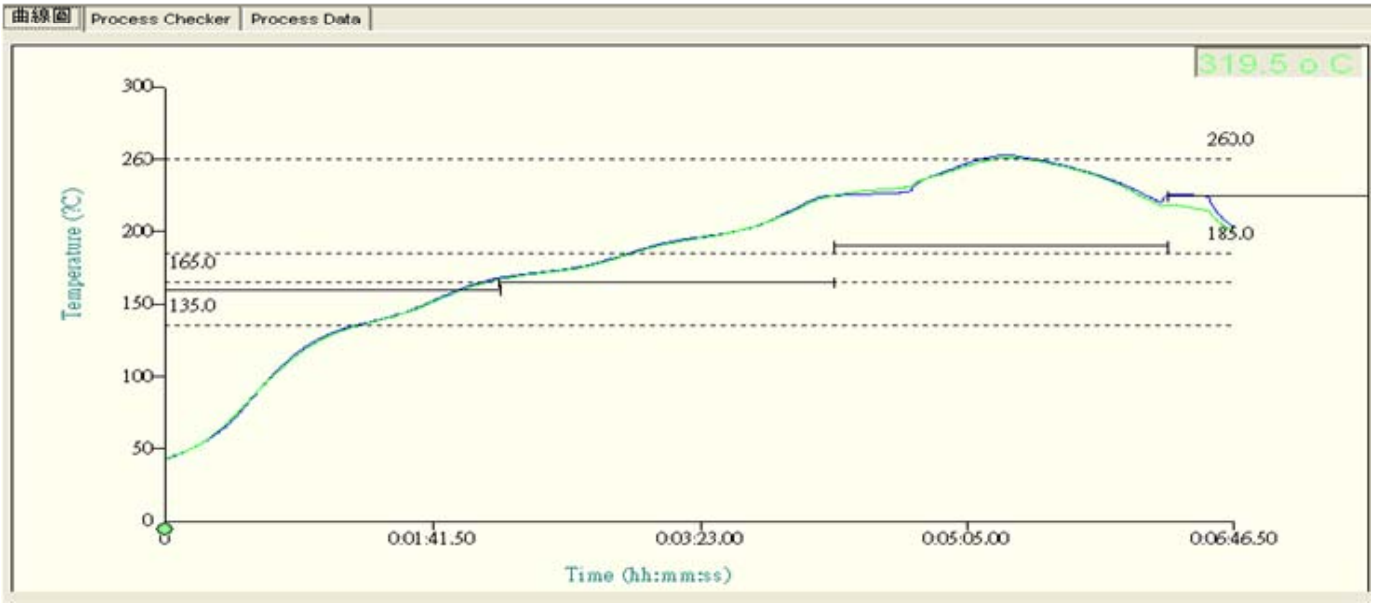


實際測試參數[In fact process parameters]

**Process Parameters**

| | Description | Peak | t=135 | t=165 | 165-135 | t=185 | t>=185 | t>=250 |
|---|---|---|---|---|---|---|---|---|
| Channel 1 | IC2 | 262.80 | 72.0 | 119.50 | 47.50 | 176.50 | 230.0 | 20.0 |
| Channel 2 | C25 | 261.0 | 73.50 | 122.0 | 48.50 | 178.0 | 228.50 | 12.50 |

| | 測試項目<br>Test Item | 測試條件<br>Test Condition | 檢測設備<br>Inspection Equipment | 測試結果<br>Test Result | 判定<br>[Result] OK | NG |
|---|---|---|---|---|---|---|
| 1 | 外觀<br>[Appearance] | 無明顯損傷現象<br>[No evidence of physical damage.] | A | 符合要求[accorded with requirements] | ✓ | |
| | | | | | | |

備注:測試設備A:顯微鏡[remark: Test Equipment A: microscopes ]

批 准:
Approved by: 傅學敏

審 核:
Checked by: 朱平

檢驗員:
Test by: 吳才群