Customer：Qisda

Attention：

No : X2

Date :

Your Part No：2B.10254.022

SPECIFICATION

MODEL： JACK

Spec No：

Sample No.： CH-34-G-GP

RECEIPT STATUS

RECEIVED

By Date

Signature

Name

Title

DSG'D Gray Huang

APP'D Wang Zhao

Sales'D LuYaFei

Zhangjiagang Huajie Electronic Co., Ltd
No.85 Nanhuan Rd., Zhangjiagang, Jiangsu
Hugelent Telecommunication(Suzhou) Co., Ltd
No.1031 Special Tourism Highway of Taihu Lake,
Xukou, Suzhou
Tel: +86-512-66518383 66511868
Fax: +86-512-66515555
Email: huajie@public1.sz.js.cn
Yafei_lu@huajie.com

Http://www.huajie.com www.hugelent.com

DOCUMENT NO CH-34-G -GP (2B.10254.022)	TITLE PRODUCT SPECIFICATION	PAGE 1

Item to Modification

NO	Date	Contents before Modification	Contents after Modification	Confirmation
1.	2018.5.10	焊脚长 3.2mm	焊脚长 2.7mm	WangZhao

837-0000-145

REV.	NOTE	DATE	SIGN
X/1			

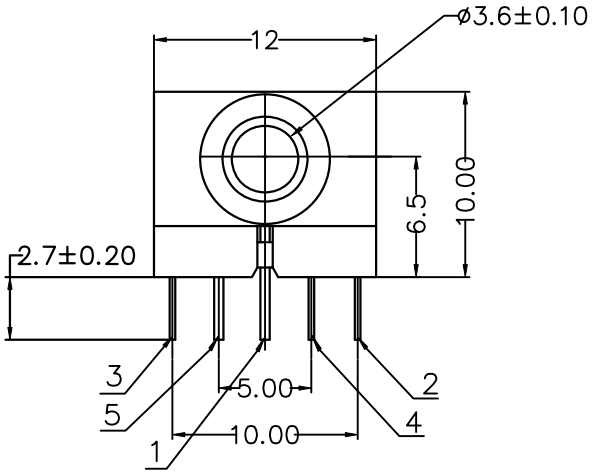

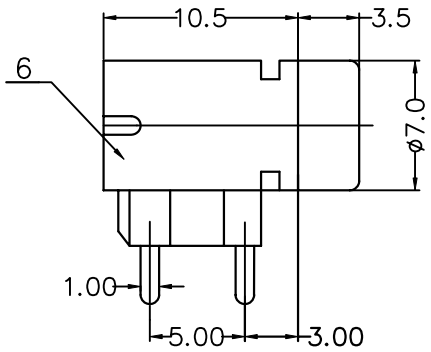

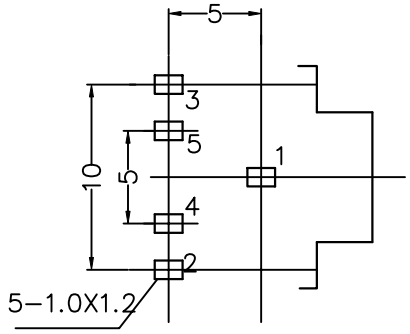

安装孔尺寸

NOTE:

1. 电器特性：
   绝缘电阻：≥100M
   耐电压：≥500V AC
   接触电阻：≤30m
2. 机械特性：
   插入力：≤3.0Kgf

3.环境：
   工作温度：-40℃-85℃

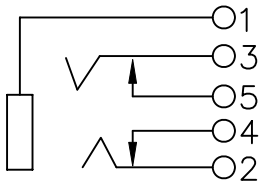

回路图

序号	名称	数量	材料	镀层	备注
6	Housing	1	PBT		GREEN
5	5#Pin	1	H62-0.4Y	Ag	
4	4#Pin	1	H62-0.4Y	Ag	
3	3#Pin	1	QSn6.5-0.1-0.3T	Ag	
2	2#Pin	1	QSn6.5-0.1-0.30T	Ag	
1	1#Pin	1	H62 0.5Y	Ag	

UNITS:	MM[INCH]
X.±	X.°±
.X± 0.35[0.012]	.X°±
.XX± 0.25[0.010]	.XX°±
.XXX± 0.15[0.008]	.XXX°±
DR:	
CHKD:	
STD:	
APPD:	

NAME(INTENDED USE)

CUSTOMER DRAWING FOR JACK CONN.

ZHANGJIAGANG HUAJIE ELECTRONIC CO.,LTD.

SHEET	SCALE
1/1	1:1

PRODUCT NO.
CH-34-G-GP

DRAWING NO.
837-0000-145

DATE	SIGN

FORMAT(1)

PHONE JACK SPECIFICATION

1. Scope

This specification covers the **JACK connector** manufactured by HUAJIE.

2. Construction

2.1 Appearance: Connector shall have good finishing, and no rust, crack or plating failures.

2.2 Operating Temperature Range:-40 to 85 ▪ C (normal humidity, normal press.)

2.3 Storage Temperature Range:-40 to 85 ▪ C (normal humidity, normal press.)

3. Ratings

2.1Rated Voltage: 12 V DC Rated Current: 1.0 A

4.Electrical Performance

	Item	Test conditions	Performance
4.1	Contact Resistance	Being measured at IKHz small current contact resistance mete.	30mΩ max
4.2	Insulation Resistance	Measurements shall be made following spplication of DC 500V Potential across terminals and across terminals and frame for 1 minute.	100MΩ MIN
4.3	Withstand Voltage	AC500V(50Hz or 60Hz) shall be applied across terminals and across erminals and frame for one minute.	There shall be no breakdown.

5.Mechanical Performance

	Item	Test conditions	Performance
5.1	Insertion and Extraction force	EIA-364-23; peak force measured while the standard Audio plug and receptacle samples are mated	Insertion force: 2.94~29.4N Extraction force: 2.94~29.4N
5.2	Vibration	Measurements shall be made following the test set forth below: Range of oscillation: 10 to 55 Hz Amplitude, pk-to- pk: 1.5mm Cycle of sweep: 10-55-10 Hz in one minute approx. Mode of sweep: Logarithmically sweep or uniform sweep. Direction of oscillation: Three mutually perpendicular directions, including the direction of stem travel. Duration of testing: 2 hours each, for a total of 6 hours	No discontinuity great than 1 us
5.3	Impact shock Resistance	Measurements shall be made following the test set forth below: (1)Acceleration:50G 1/2 sine wave 11ms (2)Cycles of test:3 cycles each in 6 directions, for a total of 18 cycle	No discontinuity great than 1 us

张家港华捷电子有限公司 Zhangjiagang Huajie Electronic Co., Ltd.		DESCRIPTION	STIN	REV	X1
		CHECKED BY	Ronnie	TITLE	
DESIGNER	GrayHuang	APPROVED BY	WangZhao	PAGE	

PH0NE JACK SPECIFICATION

6. Environmental test

	Item	Test conditions	Performance
6.1	Durability test	5,000 cycles of operation at a rate of 100~200 cycles per hour with unloading.	Meet the electrical and mechanical specification
6.2	Heat test	At 85 ± 2 ℃ for 96 hours,after test keep in normal condition for 30 minutes.	Meet the electrical and mechanical specification
6.3	Humidity test	The condition of temperature 40 ± 2 ℃ and humidity 90~95% for 96 hours,after test keep in normal condition for 30 minutes	Meet the electrical and mechanical specification
6.4	Cold test	At -40 ℃ for 96 hours,after test keep in normal condition for 30 minutes	Meet the electrical and mechanical specification
6.5	Salt spray test	At 5% Nacl liquor for 24 hours,after washing, keep in normal condition for 30 minutes.	Without excessive Corrosion or crack in appearance
6..6	Solder ability test	The samples immersed in flux pin(Recommend the use of a non-active flux), Maintain the time <3 seconds, Immersed in solder pin length 1.5 ~ 2.0mm from the body the following section. The sample pin from the body immersed in the following sections 1.5 ~ 2.0mm solder temperature is 235 ± 5 ℃ tin furnace.Maintain the time <3 seconds,Then remove	Pin solder surface even, smooth, dip solder area of ≥ 90%.
6.7	Heat cycle test	Repeated condition:-55℃ for 30 minutes and +85℃ for 30 minutes for 5 cycles. 5 minutes transition time between -55℃ and +85℃	Item 4.1 and 4.2 shall be satisfied Contact Resistance: 10 mΩ changed from original per mated pair
6.8	Resistance to solder heat(for lead Free soldering)	1)EIA-364-56,dip solder at 260 ± 5 ℃ for 10 ± 0.5seconds;Dip depth :below the housing surface1.5mm.etailed see the attached file of Rohs component.Resistance to solder heat and solder ability standard.	N o phy sical damage and Electrical and mechonical performance be satisfied.

PHONE JACK SPECIFICATION

7.**Package:**

Inside packing bag contains pcs JACKES.

One outside packing box contains pcs JACKES

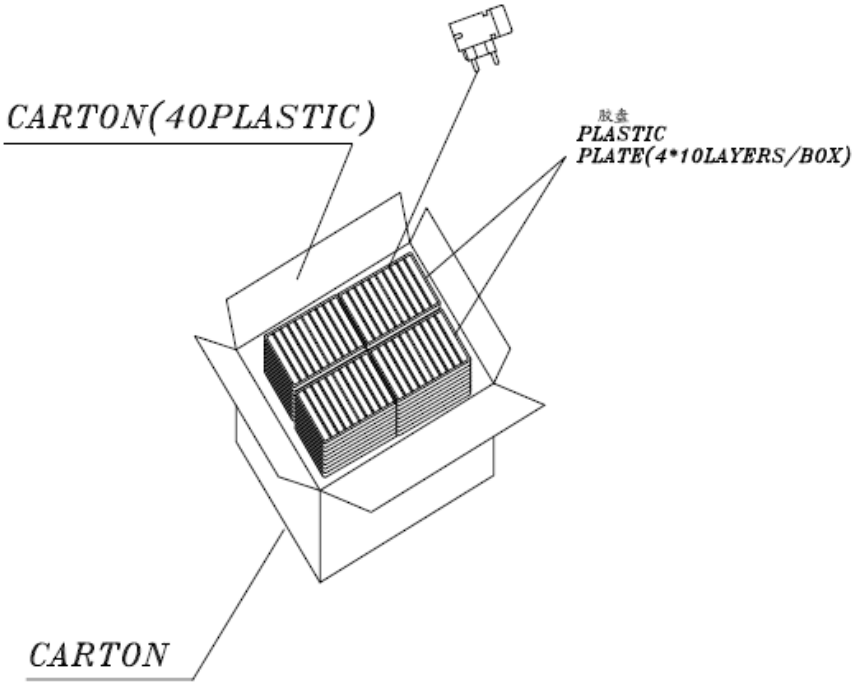

1 CARTON

=40 × (PLASTIC/100PCS)

=4000PCS

N. W. =1. 56g/PCS X 4000PCS
=6. 24kg

G. W. =6. 24kg+2kg
=8. 24kg

张家港华捷电子有限公司 Zhangjiagang Huajie Electronic Co., Ltd.		DESCRIPTION	STIN	REV	A01
		CHECKED BY	Ronnie	TITLE	
DESIGNER	GrayHuang	APPROVED BY	WangZhao	PAGE	

CH-34-G-GP MATERIAL LIST

ITEM	DESCRIP TION	MATERIAL	SPECCIFICATION	SUPPLIER
1	基座	PBT	UL-94V0:GREEN	
2	1#PIN	H62	Ag PLATED	
3	2#PIN	C5191	Ag PLATED	
4	3#PIN	C5191	Ag PLATED	
5	4#PIN	H62	Ag PLATED	
6	5#PIN	H62	Ag PLATED	
APPROVAL: WANG YI		CHECK : WANG ZHAO		PREPARE: GRAY HUANG

ZHANGJIAGANG HUAZHIJIE INTERNATIONAL TRADING CO. LTD.
TEST REPORT

CUSTOMER NO:2B.10254.022	TEST REPORT	PAGE 1

4.Electrical characteristics

No	Item	Sample No	Test Result					Criteria
4.1	Contact resistance	1#.2#.3#.4#.5#（mΩ）	9.6	10.5	9.7	10.2	9.8	30mΩ max.
4.2	Insulation resistance	1#.2#.3#.4#.5#（MΩ）	OK	OK	OK	OK	OK	100MΩ min.
4.3	Withstand Voltage	1#.2#.3#.4#.5#（500VAC）	OK	OK	OK	OK	OK	There shall be no breakdown.

5.Mechanical characteristics

No	Item	Sample No	Test Result					Criteria
5.1	Insertion and Extraction force	6#.7#.8#.9#.10#（N）	14.4	15.3	13.4	13.2	13.6	2.94～29.4N
5.2	Vibration	6#.7#.8#.9#.10#	OK	OK	OK	OK	OK	No discontinuity great than 1 us
5.3	Impact shock Resistance	6#.7#.8#.9#.10#	OK	OK	OK	OK	OK	No discontinuity great than 1 us

Designer	GrayHuang	Date		CHECK	WangZhao	Date	

ZHANGJIAGANG HUAZHIJIE INTERNATIONAL TRADING CO. LTD.
TEST REPORT

6. 1 Durability

Customer NO: 2B.10254.022 Huajie NO:CH-34-G-GP Quantity 5
Conclusion OK
1.Purpose of test THE TEST OF SAMPLE
2.Content and conditions of test:
(1) DC 12V 1 A resistive load
(2) 5,000 cycles of operation at a rate of 100~200 cycles per hour with unloading.
3.Instrument/Device in use
(1)life testing meter
(2) Voltage-proof testing meter
(3) Contact resistance testing meter
(4) Force testing meter
(5) Insulation resistance testing meter
4.Items and Results of Test

Item		Criteria	Test result					Result
			11#	12#	13#	14#	15#	
Before Test	Contact resistance(mΩ)	30mΩ max.	11.8	10.2	9.7	9.5	10.7	OK
	Insulation resistance(MΩ)	100MΩ MIN	OK	OK	OK	OK	OK	OK
	Withstand Voltage	No breakdown	OK	OK	OK	OK	OK	OK
	Insertion and Extraction force	2. 94～29. 4N	13.8	14.2	13.5	14.2	15.4	OK
After Test	Contact resistance(mΩ)	30mΩ max.	12.2	13.4	11.2	12.5	13.4	OK
	Insulation resistance(MΩ)	100MΩ min	OK	OK	OK	OK	OK	OK
	Withstand Voltage	No breakdown	OK	OK	OK	OK	OK	OK
	Insertion and Extraction force	2. 94～29. 4N	12.6	13.2	11.3	12.3	12.7	OK

Designer	GrayHuang	Date		CHECK	WangZhao	Date	

ZHANGJIAGANG HUAZHIJIE INTERNATIONAL TRADING CO. LTD.
TEST REPORT

6.2 Heat test

Customer NO: 2B.10254.022 Huajie NO: CH-34-G-GP Quantity 5

Conclusion OK

1.Purpose of test THE TEST OF SAMPLE

2.Content and conditions of test:

(1) Temperature: 85±2℃

(2) Time: 96 hours

(3) After test keep in normal condition for 30 minutes

3.Instrument/Device in use

(1) WG3002B high temperature testing box

(2) Temperature testing meter

(3) Voltage-proof testing meter

(4) Contact resistance testing meter

(5) Force testing meter

(6) Insulation resistance testing meter

4.Items and Results of Test

Item		Criteria	Test result					Result
			26#	27#	28#	29#	30#	
Before Test	Contact resistance(mΩ)	30mΩ max.	10.4	11.2	9.8	10.5	10.4	OK
	Insulation resistance(MΩ)	100MΩ MIN	OK	OK	OK	OK	OK	OK
	Withstand Voltage	No breakdown	OK	OK	OK	OK	OK	OK
	Insertion and Extraction force	2.94～29.4N	14.8	13.4	12.8	12.5	13.4	OK
After Test	Contact resistance(mΩ)	30mΩ max.	12.2	12.4	11.4	13.7	13.2	OK
	Insulation resistance(MΩ)	50MΩ min	OK	OK	OK	OK	OK	OK
	Withstand Voltage	No breakdown	OK	OK	OK	OK	OK	OK
	Insertion and Extraction force	2.94～29.4N	12.4	11.5	11.7	10.4	12.2	OK

Designer	GrayHuang	Date		CHECK	WangZhao	Date	

ZHANGJIAGANG HUAZHIJIE INTERNATIONAL TRADING CO. LTD.
TEST REPORT

6.3 Humidity test

Customer NO: 2B.10254.022 Huajie NO:CH-34-G-GP Quantity 5

Conclusion OK

1.Purpose of test THE TEST OF SAMPLE

2.Content and conditions of test:

(1) Temperature: 40±2℃

(2) Relative humidity: 90 to 95%

(3) Time: 96 hours

(4) After test keep in normal condition for 30 minutes

3.Instrument/Device in use

(1) SH01 constant temperature and constant moisture testing box

(2) Temperature testing meter

(3)Voltage-proof testing meter

(4) Contact resistance testing meter

(5) Force testing meter

(6) Insulation resistance testing meter

4.Items and Results of Test

Item		Criteria	Test result					Result
			31#	32#	33#	34#	35#	
Before Test	Contact resistance(mΩ)	30mΩ max.	10.2	11.4	9.7	12.4	11.3	OK
	Insulation resistance(MΩ)	100MΩ MIN	OK	OK	OK	OK	OK	OK
	Withstand Voltage	No breakdown	OK	OK	OK	OK	OK	OK
	Insertion and Extraction force	2.94～29.4N	14.8	13.7	14.5	14.3	14.6	OK
After Test	Contact resistance(mΩ)	30mΩ max.	12.4	13.4	11.2	13.6	12.6	OK
	Insulation resistance(MΩ)	50MΩ min	OK	OK	OK	OK	OK	OK
	Withstand Voltage	No breakdown	OK	OK	OK	OK	OK	OK
	Insertion and Extraction force	2.94～29.4N	11.4	12.2	11.7	12.4	12.3	OK

Designer	GrayHuang	Date		CHECK	WangZhao	Date	

ZHANGJIAGANG HUAZHIJIE INTERNATIONAL TRADING CO. LTD.
TEST REPORT

6.4 Cold test

Customer NO: 2B.10254.022 Huajie NO: CH-34-G-GP Quantity 5

Conclusion OK

1.Purpose of test THE TEST OF SAMPLE

2.Content and conditions of test:

(1)Temperature: -40±2℃

(2)Time : 96 hours

(3) After test keep in normal condition for 30 minutes

3.Instrument/Device in use

(1)WD7005 low temperature testing box

(2) Temperature testing meter

(3) Voltage-proof testing meter

(4) Contact resistance testing meter

(5) Force testing meter

(6) Insulation resistance testing meter

4.Items and Results of Test

Item		Criteria	Test result					Result
			36#	37#	38#	39#	40#	
Before Test	Contact resistance(mΩ)	30mΩ max.	10.2	11.5	10.3	9.8	10.7	OK
	Insulation resistance(MΩ)	100MΩ MIN	OK	OK	OK	OK	OK	OK
	Withstand Voltage	No breakdown	OK	OK	OK	OK	OK	OK
	Insertion and Extraction force	2.94～29.4N	14.4	13.7	14.7	14.6	13.4	OK
After Test	Contact resistance(mΩ)	30mΩ max.	13.2	11.3	12.4	11.7	12.1	OK
	Insulation resistance(MΩ)	50MΩ min	OK	OK	OK	OK	OK	OK
	Withstand Voltage	No breakdown	OK	OK	OK	OK	OK	OK
	Insertion and Extraction force	2.94～29.4N	13.2	12.5	12.9	12.7	11.4	OK

Designer	GrayHuang	Date		CHECK	WangZhao	Date	

ZHANGJIAGANG HUAZHIJIE INTERNATIONAL TRADING CO. LTD.
TEST REPORT

6.5 Salt spray test

Customer NO: 2B.10254.022 Huajie NO:CH-34-G-GP Quantity 5

Conclusion OK

1.Purpose of test THE TEST OF SAMPLE

2.Content and conditions of test:

(1)Time : 24 hours

(2)Nacl liquor: 5%±1%

(3) Continuous Spray

3.Instrument/Device in use

(1)JK-60 Salt Spray testing box

4.Items and Results of Test

Item		Criteria	Test result					Result
			41#	42#	43#	44#	45#	
After Test	appearance	Without excessive Corrosion or crack in appearance	OK	OK	OK	OK	OK	OK
Designer	GrayHuang	Date		CHECK	WangZhao	Date		

ZHANGJIAGANG HUAZHIJIE INTERNATIONAL TRADING CO. LTD.
TEST REPORT

6.6 Solder ability test

Customer NO: 2B.10254.022 Huajie NO:CH-34-G-GP Quantity 5

Conclusion OK

1.Purpose of test THE TEST OF SAMPLE

2.Content and conditions of test:

The samples immersed in flux pin(Recommend the use of a non-active flux), Maintain the time <3 seconds, Immersed in solder pin length 1.5 ~ 2.0mm from the body the following section.

The sample pin from the body immersed in the following sections 1.5 ~ 2.0mm solder temperature is 235 ± 5 ℃ tin furnace.Maintain the time <3 seconds,Then remove

3.Items and Results of Test

Item		Criteria	Test result					Result
			46#	47#	48#	49#	50#	
After Test	appearance	Pin solder surface even, smooth, dip solder area of ≥ 90%	OK	OK	OK	OK	OK	OK

Designer	GrayHuang	Date		CHECK	WangZhao	Date	

ZHANGJIAGANG HUAZHIJIE INTERNATIONAL TRADING CO. LTD.
TEST REPORT

6.7 Heat cycle test

Customer NO: 2B.10254.022 Huajie NO: CH-34-G-GP Quantity 5

Conclusion OK

1.Purpose of test THE TEST OF SAMPLE

2.Content and conditions of test:

Repeated condition:-55℃ for 30 minutes and +85℃ for 30 minutes for 5 cycles. 5 minutes transition time between -55℃ and +85℃

3.Instrument/Device in use。

(1)WD7005heat/ low temperature testing box

(2) Temperature testing meter

(3) Voltage-proof testing meter

(4) Contact resistance testing meter

(5) Contact Resistance: 10 mΩ changed from original per mated pair

4.Items and Results of Test

Item		Criteria	Test result					Result
			51#	52#	53#	54#	55#	
Before Test	Contact resistance(mΩ)	30mΩ max.	11.5	9.7	12.4	11.2	11.6	OK
	Insulation resistance(MΩ)	100MΩ MIN	OK	OK	OK	OK	OK	OK
	Contact Resistance	10mΩ max.	OK	OK	OK	OK	OK	OK
After Test	Contact resistance(mΩ)	30mΩ max.	12.8	11.2	14.2	12.5	13.7	OK
	Insulation resistance(MΩ)	50MΩ min	OK	OK	OK	OK	OK	OK
	Contact Resistance	10mΩ max.	OK	OK	OK	OK	OK	OK

Designer	GrayHuang	Date		CHECK	WangZhao	Date	