Monolithic Dual Switching Diode
Common Cathode

LBAV70LT1G

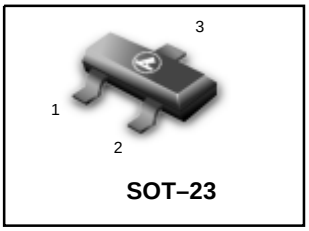

SOT–23

FETURE

- Halogen free parts.

MAXIMUM RATINGS (T_A = 25°C)

Rating	Symbol	Max	Unit
Repetitive peak reverse voltage	V_{RRM}	85	Vdc
Reverse Voltage	V_R	75	Vdc
Forward Current	I_F	200	mAdc
Peak Forward Surge Current	$I_{FM(surge)}$	500	mAdc

SYMBOL	PARAMETER	CONDITIONS	MAX.	UNIT
I_{FSM}	non-repetitive peak forward current	square wave;T_j = 25 °C prior to surge; see Fig.4 t = 1 µs	4	A

THERMAL CHARACTERISTICS

Characteristic	Symbol	Max	Unit
Total Device Dissipation FR–5 Board[1] T_A = 25°C	P_D	225	mW
Derate above 25°C		1.8	mW/°C
Thermal Resistance, Junction to Ambient	$R_{\theta JA}$	556	°C/W
Total Device Dissipation Alumina Substrate[2] T_A = 25°C	P_D	300	mW
Derate above 25°C		2.4	mW/°C
Thermal Resistance, Junction to Ambient	$R_{\theta JA}$	417	°C/W
Junction and Storage Temperature	T_J, T_{stg}	–55 to +150	°C

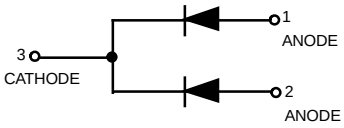

ELECTRICAL CHARACTERISTICS (T_A = 25°C unless otherwise noted)

Characteristic	Symbol	Min	Max	Unit
OFF CHARACTERISTICS				
Reverse Breakdown Voltage ($I_{(BR)}$ = 100 µAdc)	$V_{(BR)}$	75	—	Vdc
Reverse Voltage Leakage Current	I_R			µAdc
(V_R = 25 Vdc, T_J=150°C)		—	60	
(V_R = 70 Vdc)		—	2.5	
(V_R = 70 Vdc, T_J=150°C)		—	100	
Diode Capacitance (V_R = 0, f = 1.0 MHz)	C_D	—	1.5	pF
Forward Voltage	V_F			mVdc
(I_F = 1.0 mAdc)		—	715	
(I_F = 10 mAdc)		—	855	
(I_F = 50 mAdc)		—	1000	
(I_F = 150 mAdc)		—	1250	
Reverse Recovery Time R_L=100Ω (I_F= I_R=10 mAdc, VR=5.0Vdc, $I_{R(REC)}$= 1.0 mAdc) (Figure 1)	t_{rr}	—	4.0	ns

1. FR–5 = 1.0 × 0.75 × 0.062 in.
2. Alumina = 0.4 × 0.3 × 0.024 in. 99.5% alumina.

ORDERING INFORMATION

Device	Marking	Shipping
LBAV70LT1G	A4	3000 Tape & Reel
LBAV70LT3G	A4	10000 Tape & Reel

LBAV70LT1G

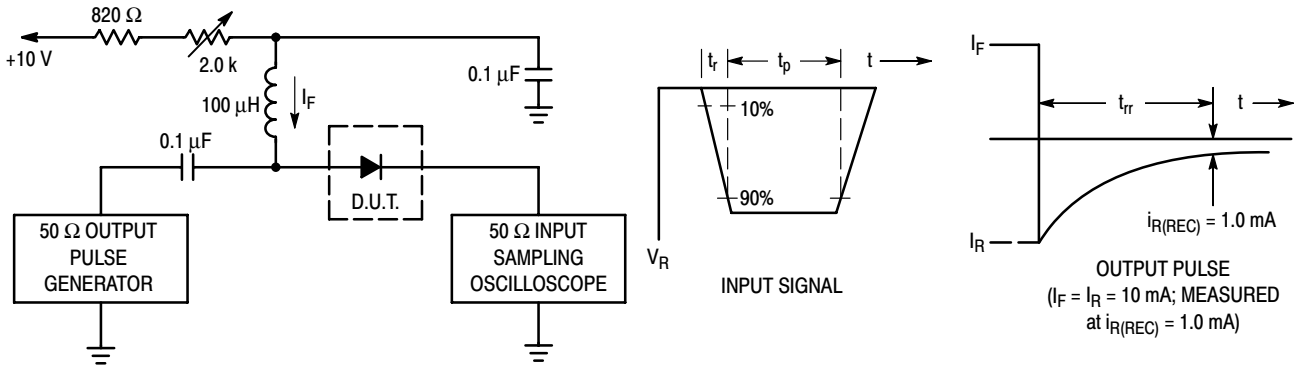

Notes: 1. A 2.0 kΩ variable resistor adjusted for a Forward Current (I_F) of 10 mA.
2. Input pulse is adjusted so $I_{R(peak)}$ is equal to 10 mA.
3. $t_p \gg t_{rr}$

Figure 1. Recovery Time Equivalent Test Circuit

Curves Applicable to Each Anode

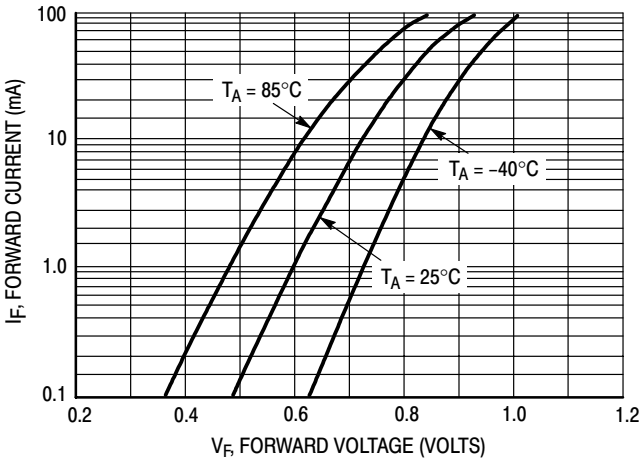

Figure 2. Forward Voltage

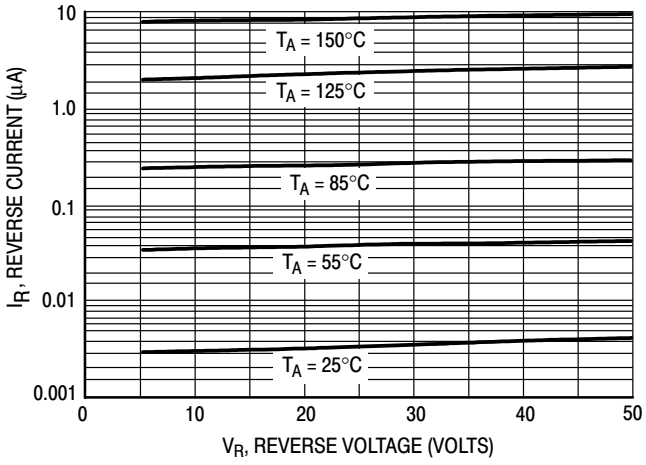

Figure 3. Leakage Current

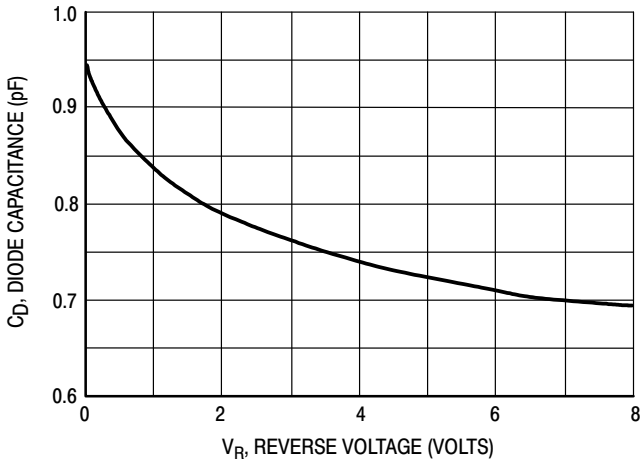

Figure 4. Capacitance

LBAV70LT1G

SOT-23

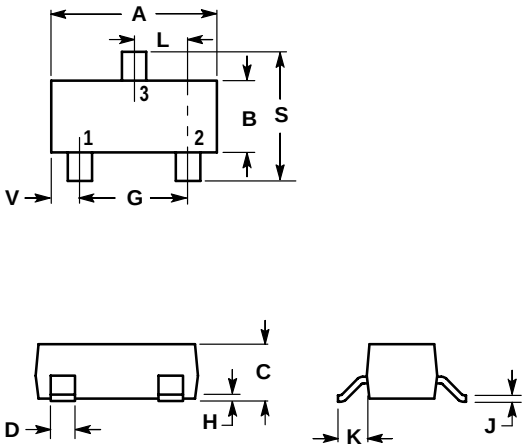

NOTES:

1. DIMENSIONING AND TOLERANCING PER ANSI Y14.5M, 1982.
2. CONTROLLING DIMENSION: INCH.

DIM	INCHES		MILLIMETERS	
	MIN	MAX	MIN	MAX
A	0.1102	0.1197	2.80	3.04
B	0.0472	0.0551	1.20	1.40
C	0.0350	0.0440	0.89	1.11
D	0.0150	0.0200	0.37	0.50
G	0.0701	0.0807	1.78	2.04
H	0.0005	0.0040	0.013	0.100
J	0.0034	0.0070	0.085	0.177
K	0.0140	0.0285	0.35	0.69
L	0.0350	0.0401	0.89	1.02
S	0.0830	0.1039	2.10	2.64
V	0.0177	0.0236	0.45	0.60

PIN 1. ANODE
2. ANODE
3.CATHODE

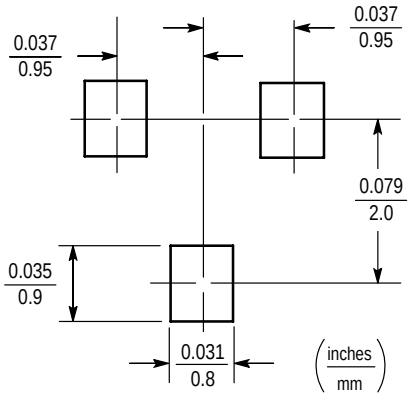

EMBOSSED TAPE AND REEL DATA
FOR DISCRETES

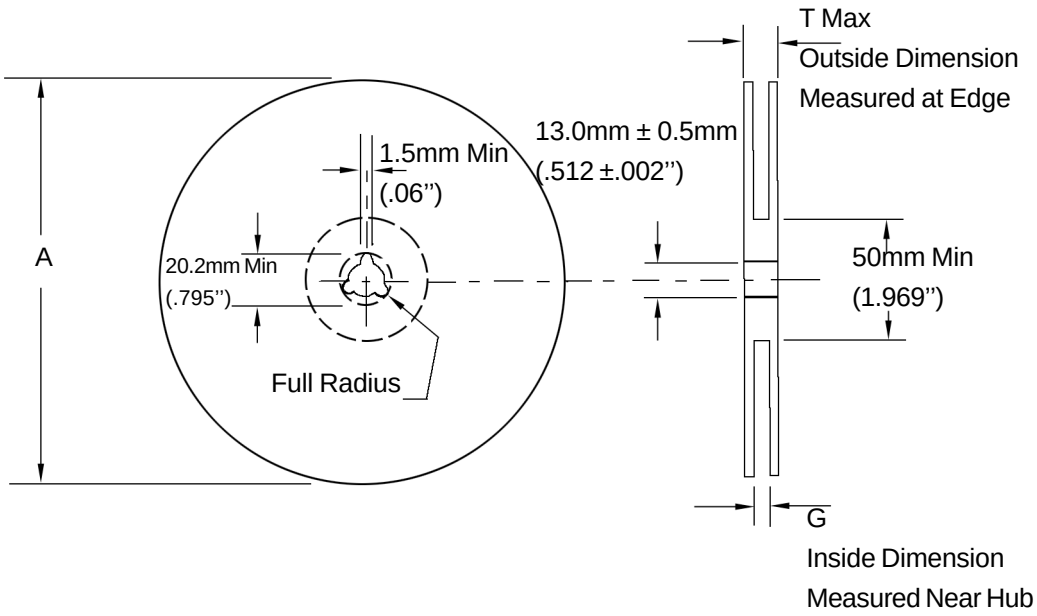

Size	A Max	G	T Max
8 mm	330mm (12.992")	8.4mm+1.5mm, -0.0 (.33"+.059", -0.00)	14.4mm (.56")

Reel Dimensions

Metric Dimensions Govern — English are in parentheses for reference only

Storage Conditions

Temperature: 5 to 40 Deg.C (20 to 30 Deg. C is preferred)
Humidity: 30 to 80 RH (40 to 60 is preferred)
Recommended Period: One year after manufacturing
(This recommended period is for the soldering condition only. The characteristics and reliabilities of the products are not restricted to this limitation)

Shipment Specification

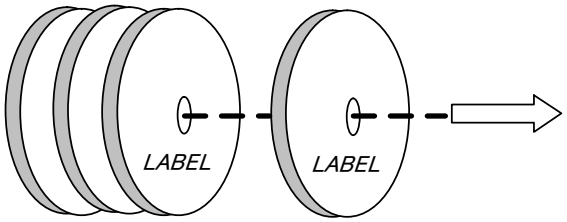

10 Reel

3000PCS/Reel
8000PCS/Reel (SOT-723,SOD-723)

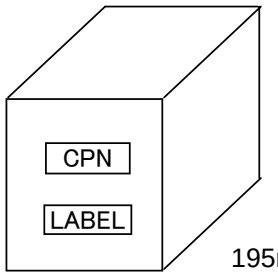

Dim(Unit:mm)

195mm*195mm*150mm

10Reel/Inner Box

30KPCS/Inner Box
80KPCS/Inner Box (SOT-723,SOD-723)

Dim(Unit:mm)

460mm*400mm*420mm

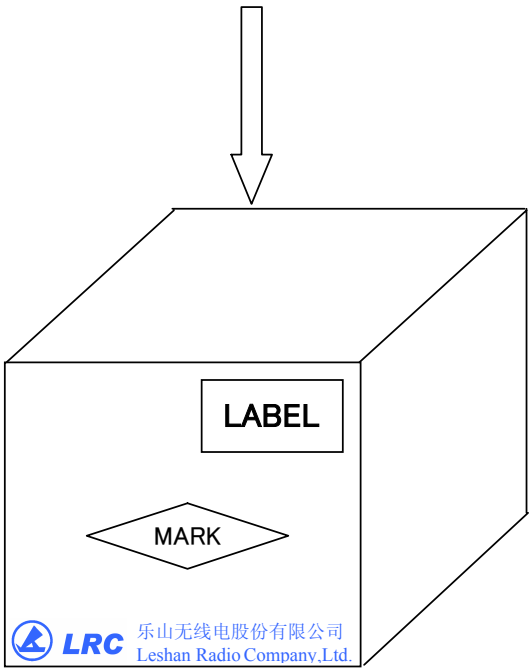

12 Inner Box/Carton

360KPCS/Carton
960KPCS/Carton (SOT-723,SOD-723)