Shenzhen Ever Glory Photoelectric Co., Ltd

深圳市友联亨达光电有限公司

电容触摸屏规格书

Capacitive Touch panel Specification

品名/Product Name: 投射式电容触摸屏

Projective Capacitive touch panel

型号/Product Number: EG-27-208-1609V1 (3ZTSPQP0N01)(Z0551)

日期/DATE: 2025/8/2

設計驗證
工程課
2025 -08- 06
發行
鈺鐘科技開發股份有限公司

制作 Edit	审核 Checked	核准 Approved
LM	DQH	LEE

变更记录 Revision sheet				
版本号 Revision No.	变更次数 Times	变更日期 Date	变更内容 Revision	制作 Edit

友聯亨達

目录
CONTENTS

1 范围 Application scope
2 产品结构 Product structure
2.1 产品尺寸 Product dimension
2.2 产品图纸 Product drawing
2.3 Pin 定义 Pin Define
3 特性 Characteristics
3.1 使用、保存环境 Operation and storage environment
3.2 电气特性 Electrical characteristics
3.3 机械特性 Mechanical characteristics
3.4 光学的特性 Optical characteristics
4 外观检查 Appearance Inspection
4.1 检查规则 Inspection Criteria
4.2 缺陷代码对照表 Defect code comparison table
4.3 检验项目及标准 Inspection items and standards
5 信赖性测试 Reliability Test
5.1 环境实验 Environmental Test
5.2 机械特性测试 Mechanical characteristics Test
5.3 盐雾测试 Salt spray test
6 标签位置 label position
7 注意事项 Precautions

1.适用范围 Application Scope

本规格书为明确规范本公司产品触控面板性能而订定，当本规格书与其它个别规格书内容有抵触情况发生时，仍以本规格书标准为最优先。本规格书内容如有项目不足或内容需变更时，须经由会议讨论后另订之。

This specification is specified the performance of our company's touch panel products. When there is a conflict between the content of this specification and other individual specifications, the standard of this specification always have the first priority. If the content of this specification is insufficient or the content needs to be changed, it must be specified separately after discussion at the meeting.

2.产品规格 Specification

2.1 产品结构 Product Specification

序号/No.	项目/Item	参数/Specification	单位/Unit
1	型式/Type	投射式电容屏/Projective Capacitive	
2	连接方式/Connection	COB	
3	屏幕寸别/Screen Diagonal	27 [16:9]	Inch
4	产品结构/Structures	G+G	
5	外形尺寸/Outline Dimension	643.6(L)*384.15(W)±0.3	mm
6	可视区/View Area	599.6(L)*338.15(W)±0.3	mm
7	动作区/Active Area	601.6(L)*340.15(L)±0.3	mm
8	Sensor 厚度/Sensor Thickness	0.7±0.05	mm
9	玻璃厚度/Cover Thickness	1.1±0.1	mm
10	总厚度/Total Thickness	2±0.15	mm
11	玻璃倒角/Chamfer	2*R10+2*R0.5	mm
12	出线长度/Tail Length	95.8	mm
13	Logo	无/No	
14	丝印颜色/Printing	黑色/Black (AG)	
15	特殊设计/Special Design	无/NO	
16	入料檢驗測試分位	PCAP81X84_A0RW_v01	

THIS DRAWING IS PROPERTY OF DongGuan Ever Glory Photoelectric Co., Ltd IT CANNOT BE REPRODUCED WITHOUT PERMISSION.

COMPONENT LIST
1. COVER : 27-208
2. SENSOR : 27-014
3. FPC : 27-V27

REV NO.	MARK	CONTENTS	ORIGINATOR	DATE.
REV.1	⚠	170新增logo	ZZ	250113

設計驗證
工程課
2025 -08- 06
發行
友達光電股份有限公司

Front view

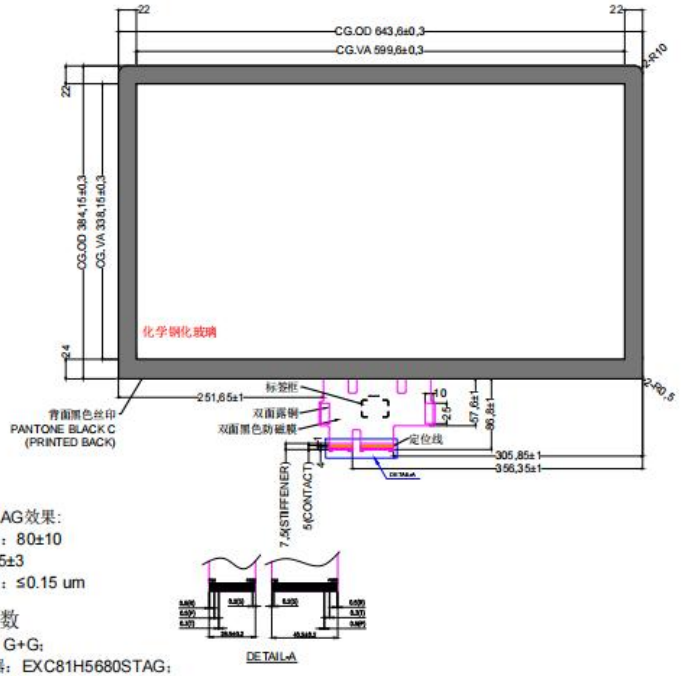

Side view



Back view

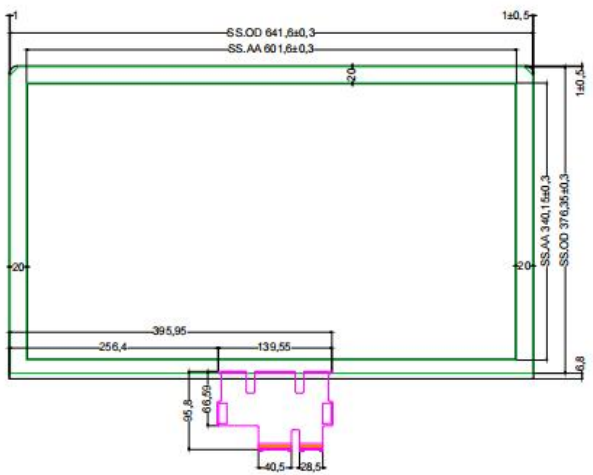

玻璃表面AG效果:
①光泽度：80±10
②雾度：5±3
③颗粒度：≤0.15 um

技术参数
1. 结构：G+G;
2. 控制器：EXC81H5680STAG;
3. 接口：///
4. 触摸点数：10;
5. 透光率：≥85%;
6. 表面硬度：≥7H;
7. 工作温度：-40℃~+85℃;
储存温度：-40℃~+95℃;
8. 一般公差：±0.3MM;
9. 所有材料均符合 Rohs 标准;

Kevin 20250305
20250305
Joseph 20250305

3ZTSPQP0N01(Z0551)

东莞市友联享达光电有限公司 DongGuan Ever Glory Photoelectric Co., Ltd						
DESIGNED	ZZ	250113	UNIT	mm	MODEL NAME	27 INCH TOUCH PANEL
CHECKED			SCALE	1:1		
APPROVED			VERSION	A0	PRODUCT NO.	EG-27-208-1609V1
3RD ANGLE			SHEETS	1/1		

Shenzhen Ever Glory Photoelectric Co., Ltd

深圳市友联享达光电有限公司

Ever Glory

設計驗證
工程課
2025 -08- 06
發行

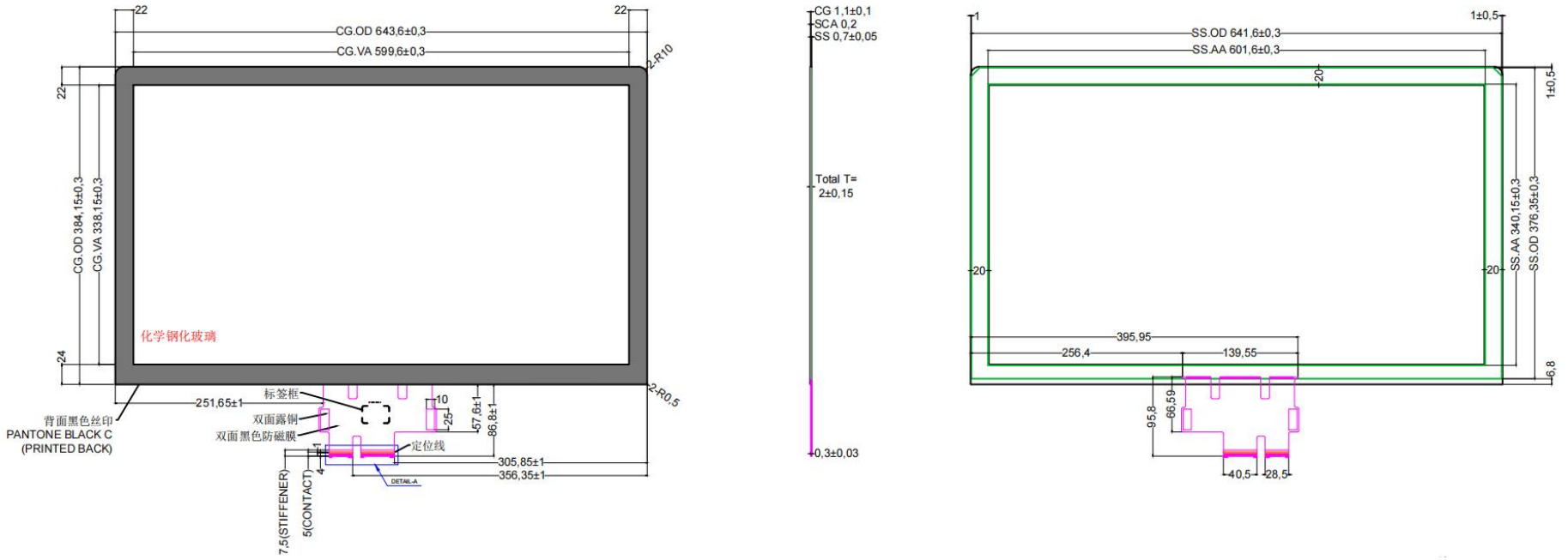

3ZTSPQP0N01(Z0551)

3.特性 Characteristics

3.1 使用、保存环境 Operation and storage enviroment

序号/No.	项目/Item	规格/Specification	
		温度/Temperature	湿度 [不可结露] Humidity[Non-Condensing]
1	工作条件 Operation Conditions	-40℃~+85℃	20%~90%RH
2	储存条件 Storage Conditions	-40℃~+95℃	20%~70%RH

3.2 电气特性 Electrical characteristics

序号/No.	项目/Item	规格/Specification	
1	操作模式/Input Mode	■Finger/手指触控 ■Active pen/主动笔触控	
2	操作模式/Support Touch Points	1~10	
3	接口/Interface	USB *(Other according to controller/其他根据控制板)*	
4	工作电压/Supply Voltage	USB 5V	
5	功耗/Power Consumption	< 0.55 W	
6	报点率/Report Rate	> 100 Hz	
7	响应时间/Response Time	< 25 ms	
8	线性度/Linearity	X≦1.0%, Y≦1.0%	
9	使用寿命 Life Time	点击测试/Knock Test > 50,000,000 times	
10	ESD [Contact/接触]	Specification: 8kv	Result: Pass
11	ESD [Air/空气]	Specification: 15kv	Result: Pass

3.3 机械特性 Mechanical characteristics

项目/Item	厚度/Thickness			
	2mm	3mm	4-6mm	> 6mm
抗冲击力 Impact resistance	IK07	IK08	IK09	IK09/10
表面硬度 surface hardness	≥6H	≥6H	≥6H	≥6H
弯曲度 Warpage	≤0.5mm	≤0.3mm	≤0.3mm	≤0.3mm
表面应力 Surface stress	> 480MPa	> 480MPa	> 480MPa	> 480MPa
油墨着附力 Ink adhesion	≥4B	≥4B	≥4B	≥4B

备注：标红的一列为本规格书对应的机械特性

The column marked in red is the corresponding mechanical characteristics of this specification

3.4 光学的特性 Optical characteristics

普通钢化玻璃 Ordinary / AF tempered glass

序号/No.	项目/Item	规格/Specification
1	Transmittance/穿透率	>85%

AG 钢化玻璃

	单面细砂					
光泽度 Gloss	40±10	50±10	70±10	80±10	95±10	110±10
粗糙度 Ra	≤0.15	≤0.15	≤0.15	≤0.15	≤0.15	≤0.15
雾度%Haze	12±4	10±4	7±3	5±3	4±3	3±2
透过率 Transmittance	≥85%	≥85%	≥85%	≥85%	≥85%	≥85%
反射率 reflectivity	< 14%	< 14%	< 14%	< 14%	< 14%	< 14%
解析度 Resolution	2:1	3:1	3:1	3:1	3:1	3:1
清晰度 clarity	40	57	79	81	83	91
适用行业 Applications	户外应用（阳光超强的国家和地区）Outdoor applications (countries and regions with strong sunlight)		取款机，广告机，显示屏 ATM, advertising machine, display screen		医疗，收银机，POS 机 Medical,cash register,POS	车载 vehicle

4.外观检测 Appearance Inspection

4.1 检查规则 Inspection Criteria

根据 ISO 文件 WI-QC-010 外观检验标准执行

5.可靠性测试 Reliability Test

5.1 使用、保存环境 Operation and storage enviroment

序号/No.	项目/Item	条件/Condition	规格 Specification
1	Constant Temperature/Humidity [恒温恒湿测试]	60℃X90%RH 240 hrs. and normalized for 4 hrs. [60℃X90%RH 240 小时，恢复常温 4 小时后开始测试]	Satisfy-3.2Electrical Characteristics 满足-[3.2 电子特性]
2	Heat Cycle [高温测试]	85℃/240 hrs. and test during constant temperature normalized for 4 hrs. [85℃/240 小时，恒温过程中需测试，恢复常温 4 小时后再测试]	
3	Cold Cycle [低温测试]	-40℃/240 hrs. and test during constant temperature normalized for 4 hrs. [-40℃/240 小时，恒温过程中需测试，恢复常温 4 小时后再测试]	
4	Thermal Cycle [冷热冲击测试]	-40℃~85℃ [60 min./cycle] *10 cycles and normalized for 4 hrs. [-40℃~85℃，每循环 60 分钟，共 10 次循环，恢复常温 4 小时后开始测试]	

5.2 机械特性测试 Mechanical characteristics Test

序号/No.	项目/Item	条件/Condition	规格 Specification
1	Operating Force [操作力度]	Finger≦10g [手指触摸≦10g]	
2	Impact [撞击测试]	Steel Ball/200g Height=150cm/1 time, Impact at center area [200g 不锈钢球；高度=150cm/中央区域撞击 1 次] 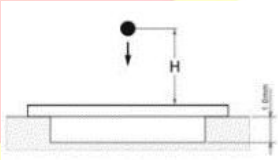	
3	Hardness [硬度测试]	6H pencil, pressure 750g/45° [6H 铅笔，压力 750g/45° (ASTM D3363)] 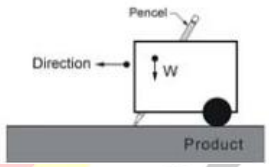	
4	Tail Peeling [剥离测试]	800gf/cm by vertical 90°for 30sec [800gf/cm 垂直 90°静置 30 秒] 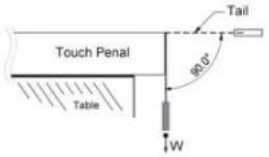	
5	Tail Bending [折弯测试]	90° 10 times left & right [90°角,左右来回 10 次] 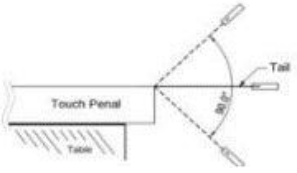	

5.3 盐雾测试

序号/No.	项目/Item	条件/Condition	规格 Specification
1	盐雾测试 Salt mist	压力桶温度 47℃±2℃ The temperature of pressure barrel is 47 ℃± 2 ℃	Satisfy- 3. Characteristics 满足- 3.特性
		压力 1kg/cm2 Pressure 1kg / cm2	
		氯化钠密度 46-46g/L Sodium chloride density 46-46g / L	
		喷雾量 1.0-2.0mL/80cm/h，连续喷雾 12 小时 Spray volume 1.0-2.0mL/80cm/h, continuous spray for 12 hours.	
		取出后在常温常湿下存放 24 小时进行测试 After removal, store it in normal temperature and humidity for 24 hours for testing	

6. 标签位置 label position

(保證條形碼在上方，數字在下方，不要顛倒了)

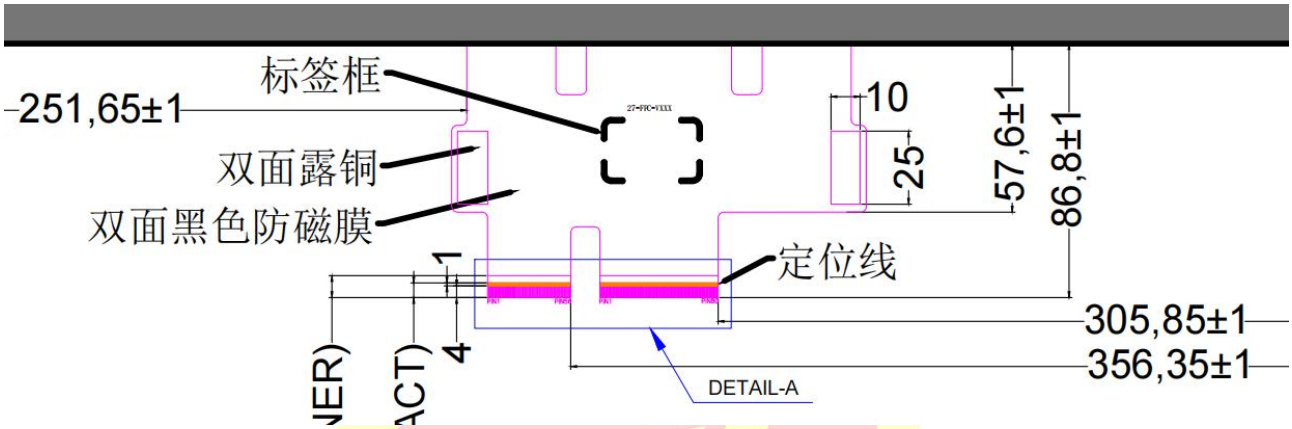

7.注意事项 Notice

7.1 我司出货产品采用纸箱或木箱内嵌泡棉方式包装
Our products are packed in cartons or wooden cases with foam inside
7.2 由于电容式触摸屏是由玻璃所制，请勿强力撞击，或高处落下；
Due to the structure of capacitive touch screen is made of glass, please do not strong impact, Or fall from height;
7.3 产品不可长时间曝露于阳光直接照射的地方；
The product should not be exposed to direct sunlight for a long time;
7.4 保存时请勿重叠放置，或重物叠压；
Please do not stack up or under weight.
7.5 电容式触摸屏本身或 FPC 具有导电性，避免与金属物质直接接触；
Due to PCAP’ s Conductivity, Please do not put the capacitive touch screen itself or FPC direct contact with metal material;
7.6 安装时请勿折弯或强力拉扯 FPC，避免造成折伤；
When assembling, please do not bend or stretch FPC, Avoid causing the injured;
7.7 安装时请勿用硬物接触电容式触摸屏背后的油墨，避免造成刮伤；
When assembling, please do not touch silkscreen area with hard meterial of TP, Avoid scratches;
7.8 为了保持产品的透明清晰度，请在接触产品之前带上指套或者手套，请注意玻璃边角部位；
In order to maintain the transparency and clarity of the product, please put on fingertips or gloves before contacting the product, and pay attention to the glass corners
7.9 安装时请勿接触可视区,如果触摸造成脏污，建议使用去渍油清洁，不能使用化学溶剂或酸碱液进行清洁；
When assembling, please do not contact the visual area, if have dirty in VA, Recommend the use of Cleaning Naphtha to clean, prevent using any kind of chemical solvent, acidic or alkali solution;
7.10 操作电容式触摸屏时，请采用手指或导电性笔触摸；注意预防高压和静电。
Operation of the capacitive touch screen, Use finger or conductive touch pen, please; must avoid high voltage and static electricity.