REV	DATE	DESCRIPTION	DRAFT	APPROVED
0	2025-08-06	INITIAL RELEASE	Laslie Chen	
1	2025-08-18	UPDATED USB CONNECTER, TS RELEASE	Laslie Chen	

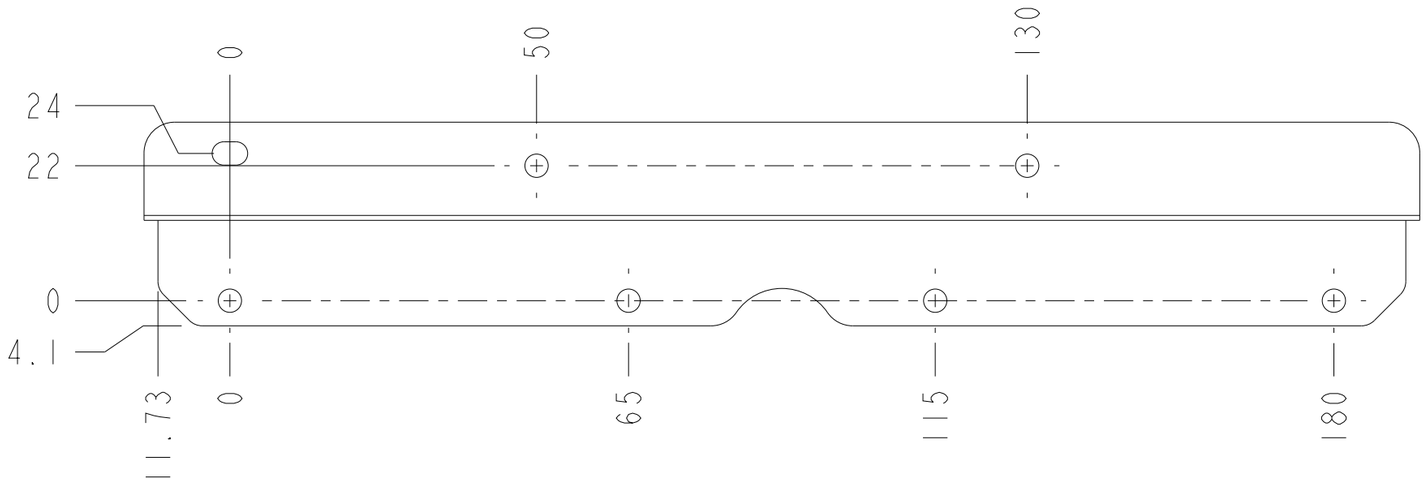

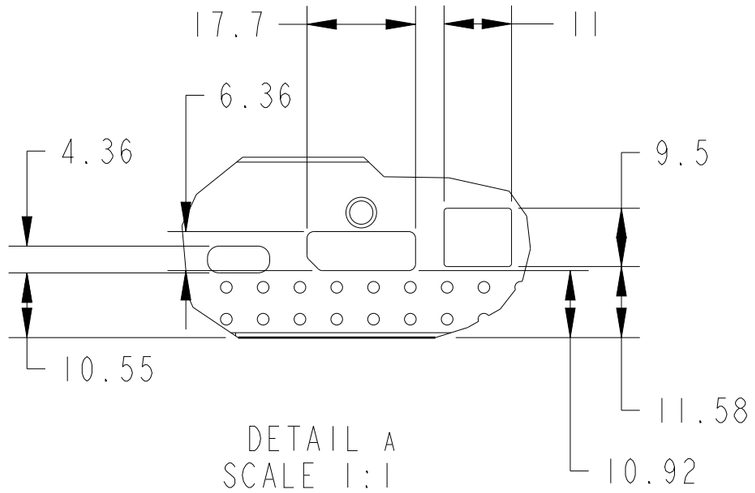

DETAIL A
SCALE 1:1

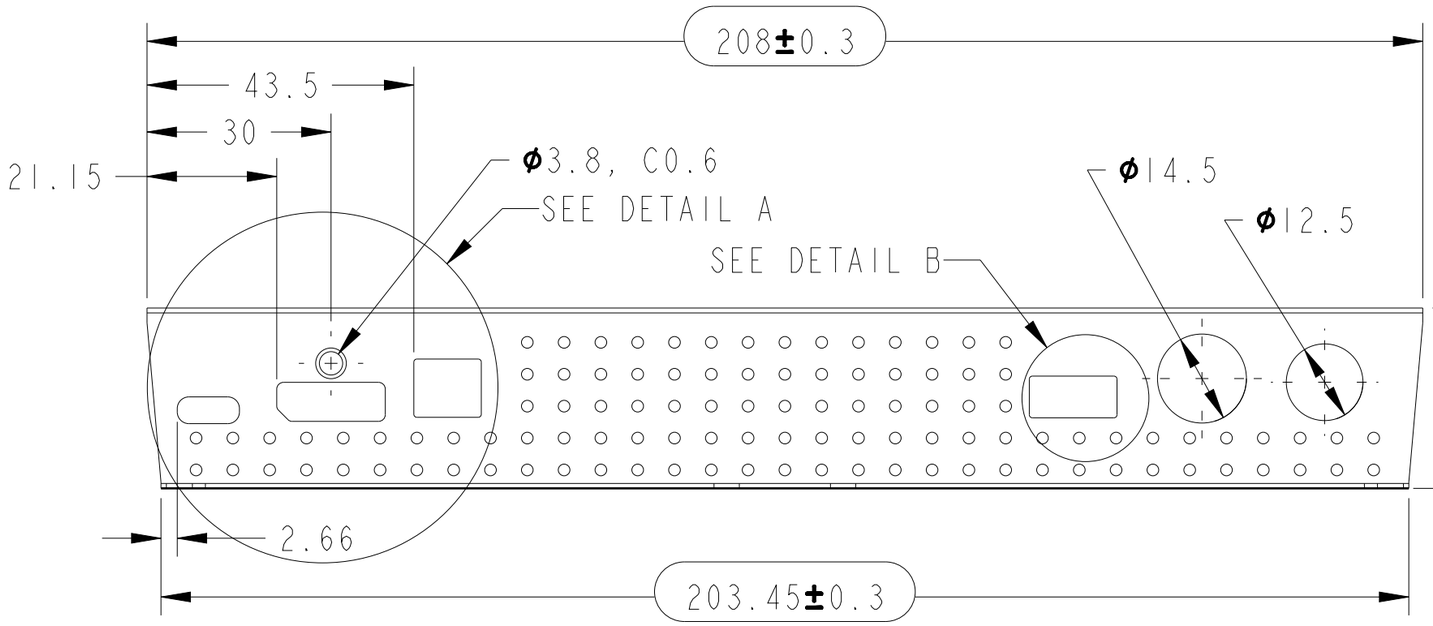

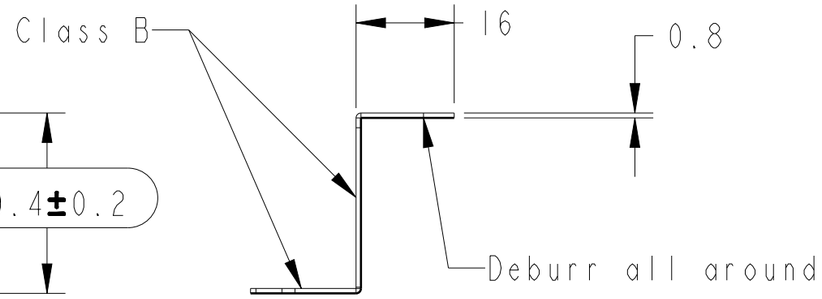

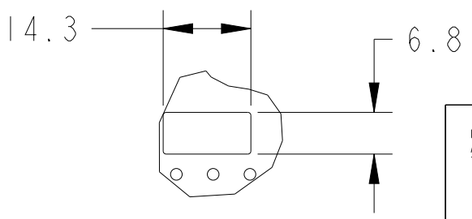

DETAIL B
SCALE 1:1

NOTE:
1. Material: SGCC.
2. Finish:NA
3. Deformation and flatness <0.5 mm.
4. Burrs & sharp edge(s) allowed in 0.03 mm MAX.. based on the principle of not hurtting hands.
5. Unspecified Dimension refer to CAD Drawing file.
6. Packing: PE bag (Each).
7. RoHS Compliant.

TOOLING NO.	3MD659MI000

UNLESS OTHERWISE SPECIFIED ALL DIMENSIONS ARE IN MM.
TOLERANCES:
.X = ± 0.5
.XX = ± 0.30
.XXX = ± 0.150
ANGLE = ± 1.0°
INTERPRET DIM AND TOL PER ASME Y14.5-2009

THIRD ANGLE PROJECTION

MATERIAL:	FINISH:	DIVA Laboratories. Ltd.				
SGCC						
DRAWN BY		PART NAME:				
Laslie Chen 2025-07-16		I/O BRACKET				
CHECKED BY		PART NUMBER:		MFG. PART NUMBER		
		3MD695MI010		NA		
APPROVED BY		MODEL NAME:	SIZE:	SCALE:	SHEET:	REV
		VMI5	A3	1:1	1 OF 1	1
FILE NAME:	APPROVED NO.:	THIS DOCUMENT IS SUPPLIED IN CONFIDENCE. NO REPRODUCTION OF THIS DOCUMENT IN PART OR IN WHOLE OR THEREON OF THE ITEMS SHOWN MAY BE MADE WITHOUT THE COPYRIGHT OWNERS WRITTEN PERMISSION.				
0027_216_10_BKT						