☐ **Preliminary Specifications**
■ **Final Specifications**

Module	32 Inch Color TFT-LCD
Model Name	G320ZAN02.5

Customer	**Date**	**Approved by**	**Date**
		Flossie Chuang	**2024/12/09**
Checked & Approved by	**Date**	**Prepared by**	**Date**
		Isaac TY Huang	**2024/12/09**
Customer's sign back page		General Display Business Unit / AU Optronics corporation	

AUO Display plus confidential for ACME use only

© AUO Display Plus Corporation Proprietary

Contents

1. Operating Precautions....4
2. General Description....5
2.1 Display Characteristics....5
2.2 Optical Characteristics....6
3. Functional Block Diagram....9
3.1 Interface Connection： 9
4. Absolute Maximum Ratings....10
4.1 Absolute Ratings of TFT LCD Module....10
4.2 Absolute Ratings of Environment....10
5. Electrical Characteristics....11
5.1 TFT LCD Module....11
5.2 Backlight Unit....12
6. Signal Characteristic....14
6.1 Pixel Format Image....14
6.2 Scanning Direction....14
6.3 Signal Description....15
6.4 The Input Data Format....18
6.4.1 eDP Data Format....18
6.4.2 The Input Data Format(eDP)....18
6.5 eDP Specification (Follow VESA Display Port Standard Version 1.2)....19
6.5.2 DisplayPort AUX_CH Signal:....21
6.5.3 DisplayPort VHPD Signal:....21
6.5.3 Intra-Pair Skew:....21
6.5.4 Inter-Pair Skew....21
6.6 Interface Timing....22
6.6.1Timing Characteristics....22
6.7 Power ON/OFF Sequence....23
6.8 I2C Command Format for Luminance Adjustment....24
6.9 Power on Sequency of I2C Command Format....24
7. Reliability Test Criteria....26
8. Mechanical Characteristics....26
8.1 LCM Outline Dimension....26
9. Label and Packaging....28
9.1 Shipping Label (on the rear side of TFT-LCD display)....28
9.2 Carton Package....28
10 Safety....29
10.1 Sharp Edge Requirements....29
10.2 Materials....29
10.3 Capacitors....29
10.4 National Test Lab Requirement....29

AUO Display plus confidential for ACME use only

Record of Revision

Version	Date	Page	Old description	New Description
0.1	2024/12/09	All	Final Specifications	

AUO Display plus confidential for ACME use only

1. Operating Precautions

1) Since front polarizer is easily damaged, please be cautious and not to scratch it.
2) Be sure to turn off power supply when inserting or disconnecting from input connector.
3) Wipe off water drop immediately. Long contact with water may cause discoloration or spots.
4) When the panel surface is soiled, wipe it with absorbent cotton or soft cloth.
5) Since the panel is made of glass, it may be broken or cracked if dropped or bumped on hard surface.
6) To avoid ESD (Electro Static Discharde) damage, be sure to ground yourself before handling TFT-LCD Module.
7) Do not open nor modify the module assembly.
8) Do not press the reflector sheet at the back of the module to any direction.
9) In case if a module has to be put back into the packing container slot after it was taken out from the container, do not press the center of the LED light bar edge. Instead, press at the far ends of the LED light bar edge softly. Otherwise the TFT Module may be damaged.
10) At the insertion or removal of the Signal Interface Connector, be sure not to rotate nor tilt the Interface Connector of the TFT Module.
11) TFT-LCD Module is not allowed to be twisted & bent even force is added on module in a very short time. Please design your display product well to avoid external force applying to module by end-user directly.
12) Small amount of materials having no flammability grade is used in the LCD module. The LCD module should be supplied by power complied with requirements of Limited Power Source (IEC60950-1 or UL1950), or be applied exemption.
13) Severe temperature condition may result in different luminance, response time and lamp ignition voltage.
14) Continuous operating TFT-LCD display under low temperature environment may accelerate lamp exhaustion and reduce luminance dramatically.
15) The data on this specification sheet is applicable when LCD module is placed in landscape position.
16) Continuous displaying fixed pattern may induce image sticking. It's recommended to use screen saver or shuffle content periodically if fixed pattern is displayed on the screen.

AUO Display plus confidential for ACME use only

© AUO Display Plus Corporation Proprietary

2. General Description

This specification applies to the Color Active Matrix Liquid Crystal Display. G320ZAN02.5 composed of a TFT-LCD display, TFT driver, power supply circuit, and MiniLED driver board with local dimming algorithm for the backlight unit. The screen format is intended to support the UHD (3840(H)x2160(V)) screen and 1.07B colors. All input signals are eDP interface compatible.

2.1 Display Characteristics

The following items are characteristics summary on the table under 25℃ condition:

Items	Unit	Specifications
Screen Diagonal	[inch]	32.0" (812.8mm)
Active Area	[mm]	708.48 (H) x 398.52 (V)
Resolution		3840(x3) x 2160
Pixel Pitch	[mm]	0.1845 (per one triad) x 0.1845
Pixel Arrangement		R.G.B. Vertical Stripe
Display Mode		Normally Black, AHVA
Nominal Input Voltage VDD	[Volt]	+12.0 V
Power Consumption	[Watt]	(typ.139.75W) (Logi.c: typ. 18.4W + BL power: typ.121.35W)
Weight	[Grams]	(4738) (Typ)
Physical Size	[mm]	727.3 (H) x 424.5 (V) x 30.5 (D) (Typ)
Electrical Interface		eDP(4lane)
Surface Treatment		Anti-Glare treatment
Support Color		10bit(True 10)
Temperature Range Operating Storage (Non-Operating)	 [℃] [℃]	 0 to +50 -20 to +60
RoHS Compliance		Yes

AUO Display plus confidential for ACME use only

© AUO Display Plus Corporation Proprietary

2.2 Optical Characteristics

The optical characteristics are measured under stable conditions(warm up 30 mins) at 25℃(Room Temperature), VDD 12V , Frame rate:60Hz:

Item	Unit	Conditions		Min.	Typ.	Max.	Note
White Luminance (Full screen)	cd/m^2	(Center point)		(800)	(1000)	---	1
Uniformity	%	9 points		---	---	20	2,3
Contrast Ratio	--			1260	1800		4
Contrast Ratio (dynamic)	--			---	1000000		
Response Time	msec	Rising		---	10	20	5
		Falling		---	10	20	
		Rising + Falling		---	20	40	
Viewing Angle	degree	Horizontal CR >= 10	(Right)	75	89	---	6
			(Left)	75	89	---	
		Vertical CR >= 10	(Upper)	75	89	---	
			(Lower)	75	89	---	
Color / Chromaticity Coordinates (CIE 1931)	--	Red x		(0.657)	(0.687)	(0.717)	
		Red y		(0.278)	(0.308)	(0.338)	
		Green x		(0.181)	(0.211)	(0.241)	
		Green y		(0.700)	(0.730)	(0.760)	
		Blue x		(0.119)	(0.149)	(0.179)	
		Blue y		(0.021)	(0.051)	(0.081)	
		White x		0.283	0.313	0.343	
		White y		0.299	0.329	0.359	
Adobe RGB coverage ratio	%(typ)			(DCIP3 98%)			

Note 1: Measurement method

Equipment Pattern Generator, Power Supply, Digital Voltmeter, Luminance meter (SR_3 or equivalent)

Aperture 1° with 50cm viewing distance

Test Point Center

Environment < 1 lux

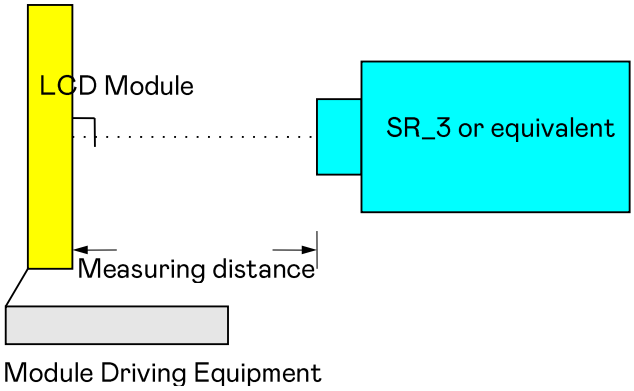

AUO Display Plus confidential for AOME use only

Note 2: Definition of 9 points position

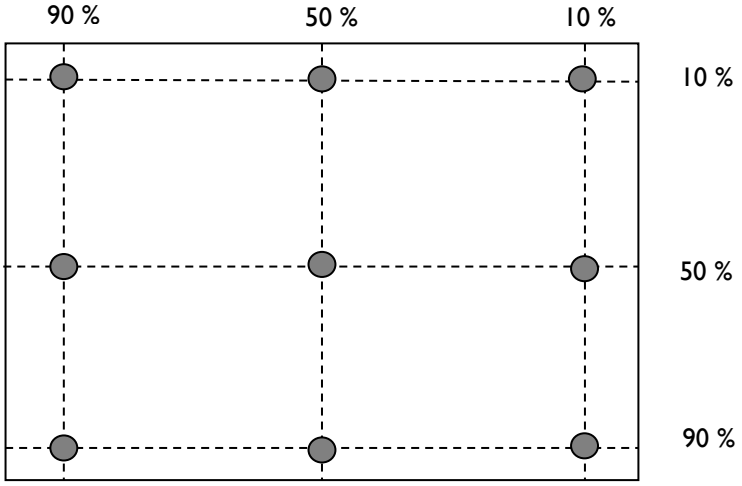

Note 3: Definition of luminance uniformity of 9 points.

$$\delta_{w9} = \frac{\left| B_{max} \text{ or } B_{min} - B_{avg} \right|}{B_{avg}} \times 100\%$$

Note 4: Definition of contrast ratio (CR):

$$\text{Contrast ratio (CR)} = \frac{\text{Brightness on the “White” state}}{\text{Brightness on the “Black” state}}$$

Note 5: Definition of response time:

The output signals of photo detector are measured when the input signals are changed from “White” to “Black” (falling time) and from “Black” to “White” (rising time), respectively. The response time interval is between 10% and 90% of amplitudes. Please refer to the figure as below.

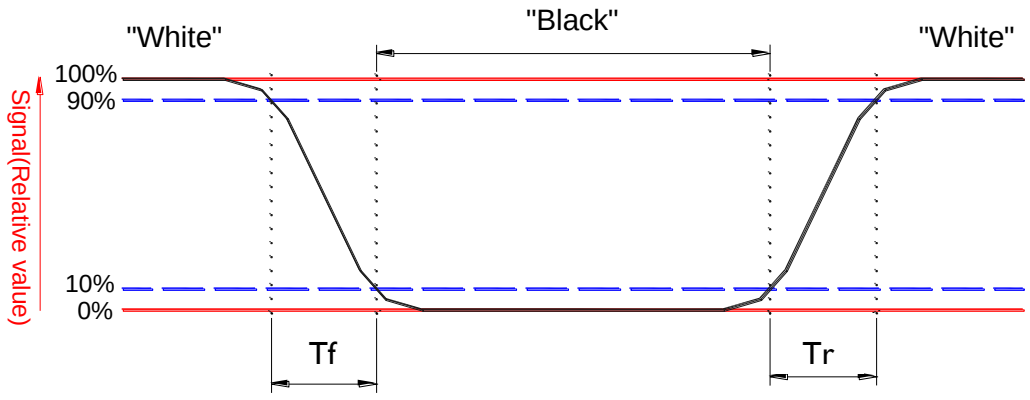

plus confidential for ACME use only

© AUO Display Plus Corporation Proprietary

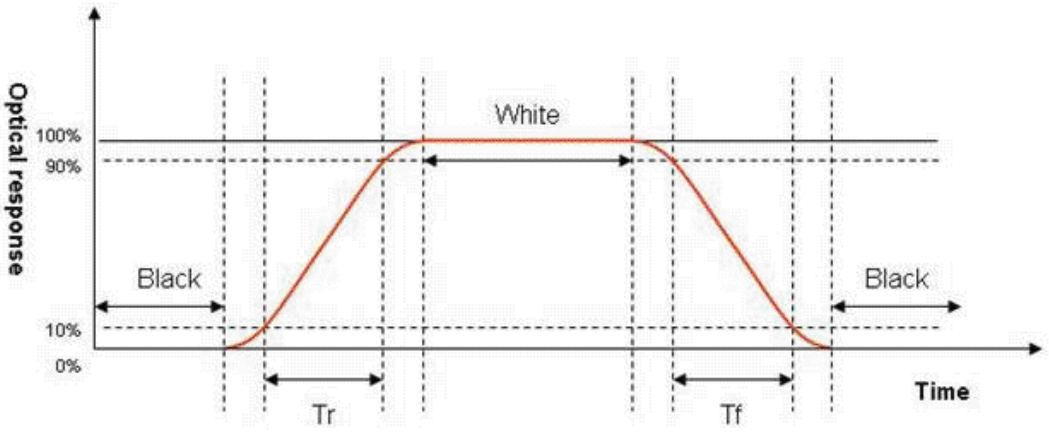

Note 6: Definition of viewing angle

Viewing angle is the measurement of contrast ratio ≧10, at the screen center, over a 180° horizontal and 180° vertical range (off-normal viewing angles). The 180° viewing angle range is broken down as below: 90° (θ) horizontal left and right, and 90° (Φ) vertical high (up) and low (down). The measurement direction is typically perpendicular to the display surface with the screen rotated to its center to develop the desired measurement viewing angle.

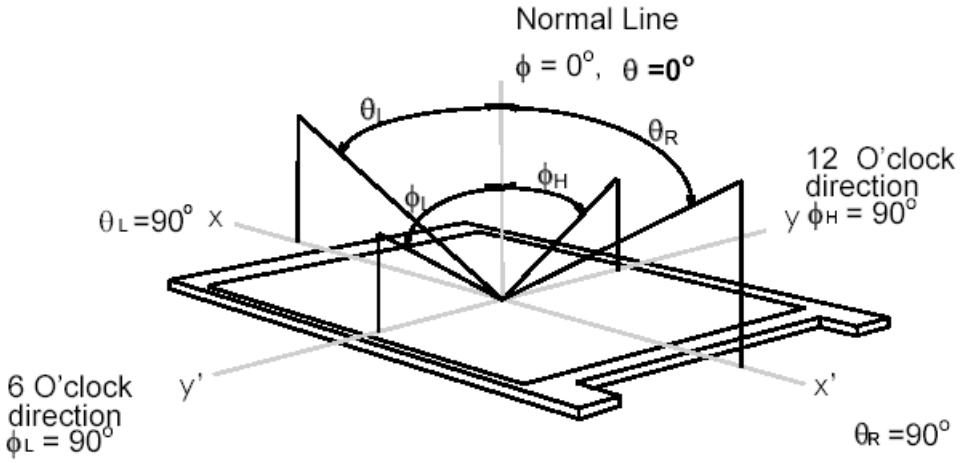

AUO Display Plus Corporation Proprietary

3. Functional Block Diagram

The following diagram shows the functional block of the 32 inch color TFT/LCD module:

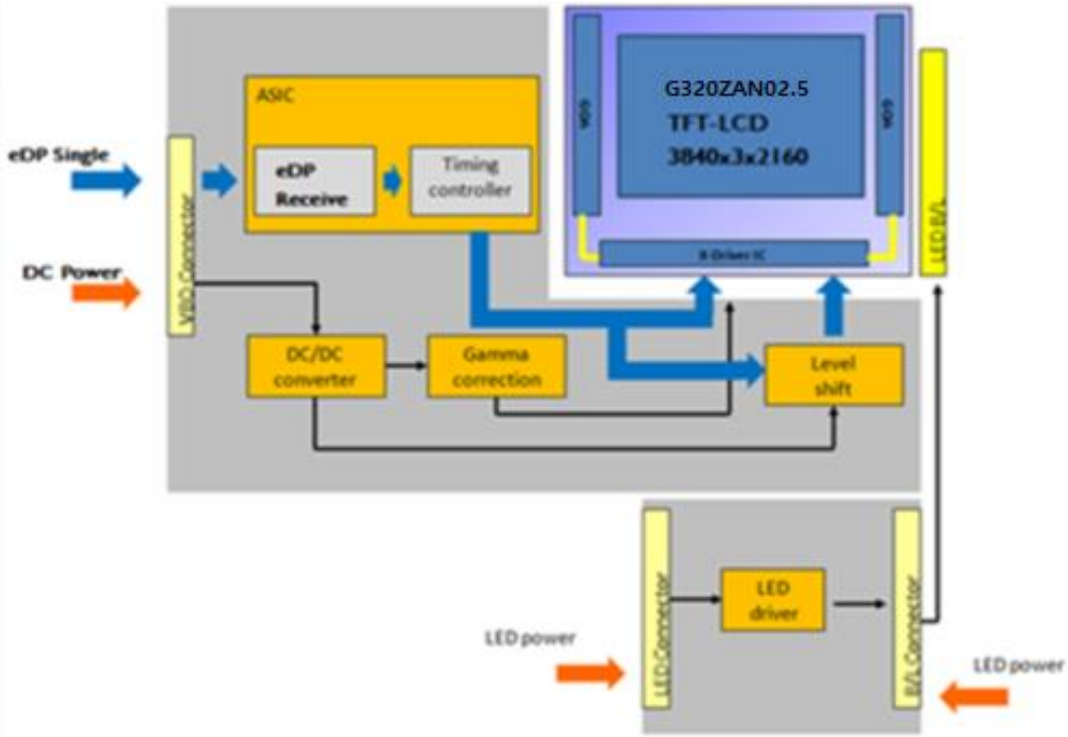

3.1 Interface Connection：

Connector Name / Designation	Signal Connector
Manufacturer	P-TWO INDUSTRIES INC.;
Connector Model Number	187059-5122
Adaptable Plug	FI-RE51HL

AUO Display plus confidential ME use only

4. Absolute Maximum Ratings

4.1 Absolute Ratings of TFT LCD Module

Item	Symbol	Min	Max	Unit
Logic/LCD drive Voltage	Vin	-0.3	+13.5	[Volt]

4.2 Absolute Ratings of Environment

Item	Symbol	Min	Max	Unit
Operating Temperature	TOP	0	+50	[℃]
Operation Humidity	HOP	5	90	[%RH]
Storage Temperature	TST	-20	+60	[℃]
Storage Humidity	HST	5	90	[%RH]
Panel Surface	PST		60	[℃]

Note 1: Maximum Wet-Bulb should be 39℃ and no condensation.

Note 2: Surface temperature is measured at 50℃, dry condition.

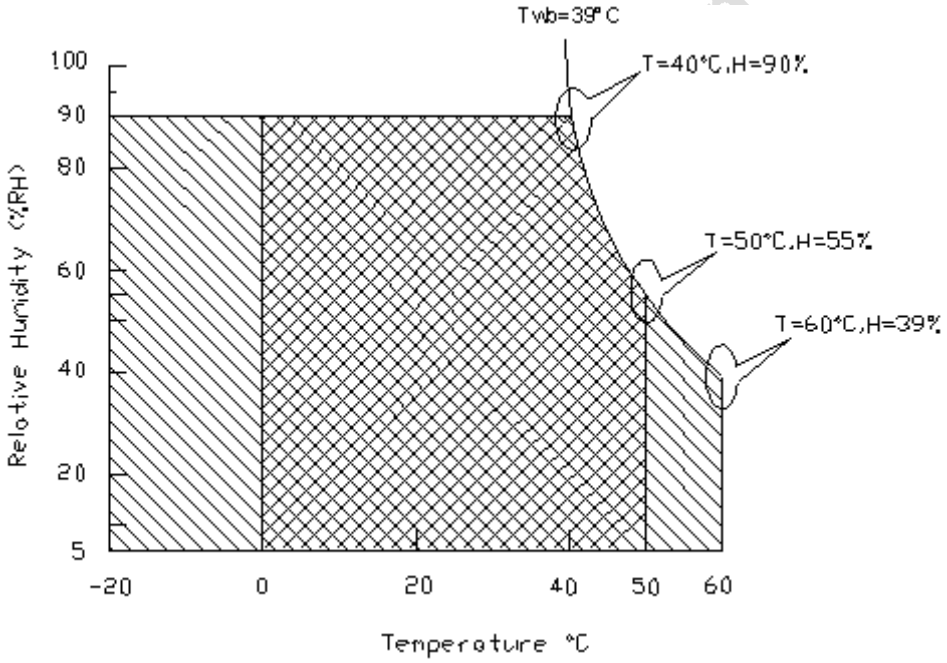

Operating Range Storage Range +

AUO Confidential for ACME use only

© AUO Display Plus Corporation Proprietary

5. Electrical Characteristics

5.1 TFT LCD Module

5.1.1 Power Specification

Input power specifications are shown as follows;

Symbol	Parameter	Min	Typ	Max	Units	Remark
VDD	Logic/LCD Drive Voltage	10.8	12.0	13.2	[Volt]	±10%
IDD	VDD Current	-	1.53	1.84	[A]	White Pattern (VDD=12V, at 60Hz)
Irush	LCD Inrush Current	-	-	4	[A]	***Note 1***
PDD	VDD Power	-	18.4	22.08	[Watt]	White Pattern (VDD=12V, at 60Hz)
VDDrp	Allowable Logic/LCD Drive Ripple Voltage	-	-	VDD* 5%	[mV]	VDD= 12.0V, White pattern, Fv=60Hz

Note 1: Measurement condition:

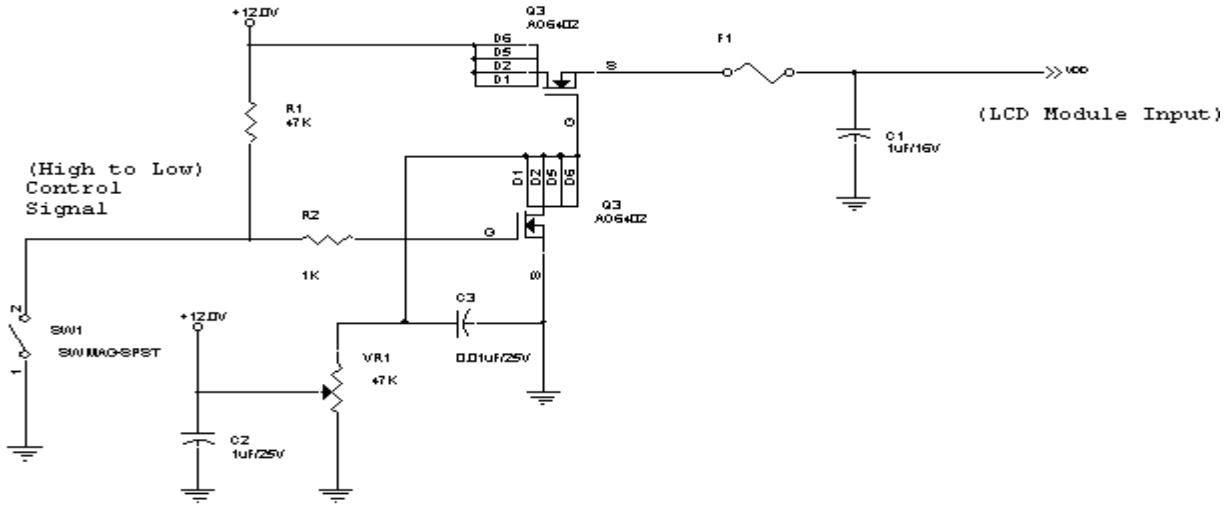

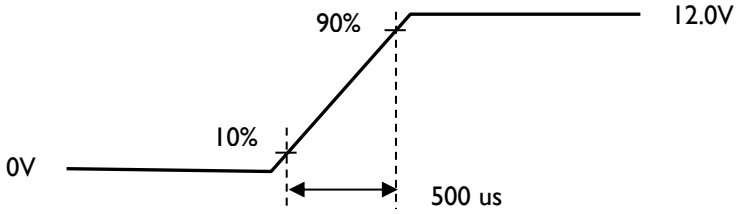

VDD rising time.

AUO Display Material for ACME use only

© AUO Display Plus Corporation Proprietary

5.2 Backlight Unit

5.2.1 LED Backlight Unit: Driver Connector

Connector Name / Designation	Lamp Connector
Manufacturer	CviLux or Compatible
Connector Model Number	CI4615M1HR0-NH
Mating Model Number	CI4615SL000- (Locking type)

Pin #	Symbol	Pin Description
1	VBL	LED Power +24V
2	VBL	LED Power +24V
3	VBL	LED Power +24V
4	VBL	LED Power +24V
5	VBL	LED Power +24V
6	VBL	LED Power +24V
7	VBL	LED Power +24V
8	NC	NC
9	GND	LED Power GND
10	GND	LED Power GND
11	GND	LED Power GND
12	GND	LED Power GND
13	GND	LED Power GND
14	GND	LED Power GND
15	GND	LED Power GND

AUO Display plus confidential for ACME use only

© AUO Display Plus Corporation Proprietary

5.2.2 Parameter guideline for LED

Following characteristics are measured under a stable condition using an inverter at 25℃(Room Temperature):

Backlight input signal characteristics

Symbol	Parameter	Min.	Typ.	Max.	Unit	Remark
VDD	Input Voltage	23	24.0	25	[Volt]	
IVDD	Input Current	---	5.056	6.067	[A]	
PVDD	Power Consumption	---	121.35	145.61	[Watt]	Typ: White Pattern
Backlight on/off	On control Voltage	2.9	3.3	3.6	[Volt]	Typ: White Pattern
	Off control Voltage		---	0.8	[Volt]	
LTLED	LED Life-Time	50,000	---	---	Hour	LED only @Ta = 25℃

Note 1: Ta means ambient temperature of TFT-LCD module.

Note 2: The LED life-time define as the estimated time to 50% degradation of initial luminous.

AUO Display plus confidential for ACME use only

© AUO Display Plus Corporation Proprietary

6. Signal Characteristic

6.1 Pixel Format Image

Following figure shows the relationship between input signal and LCD pixel format.

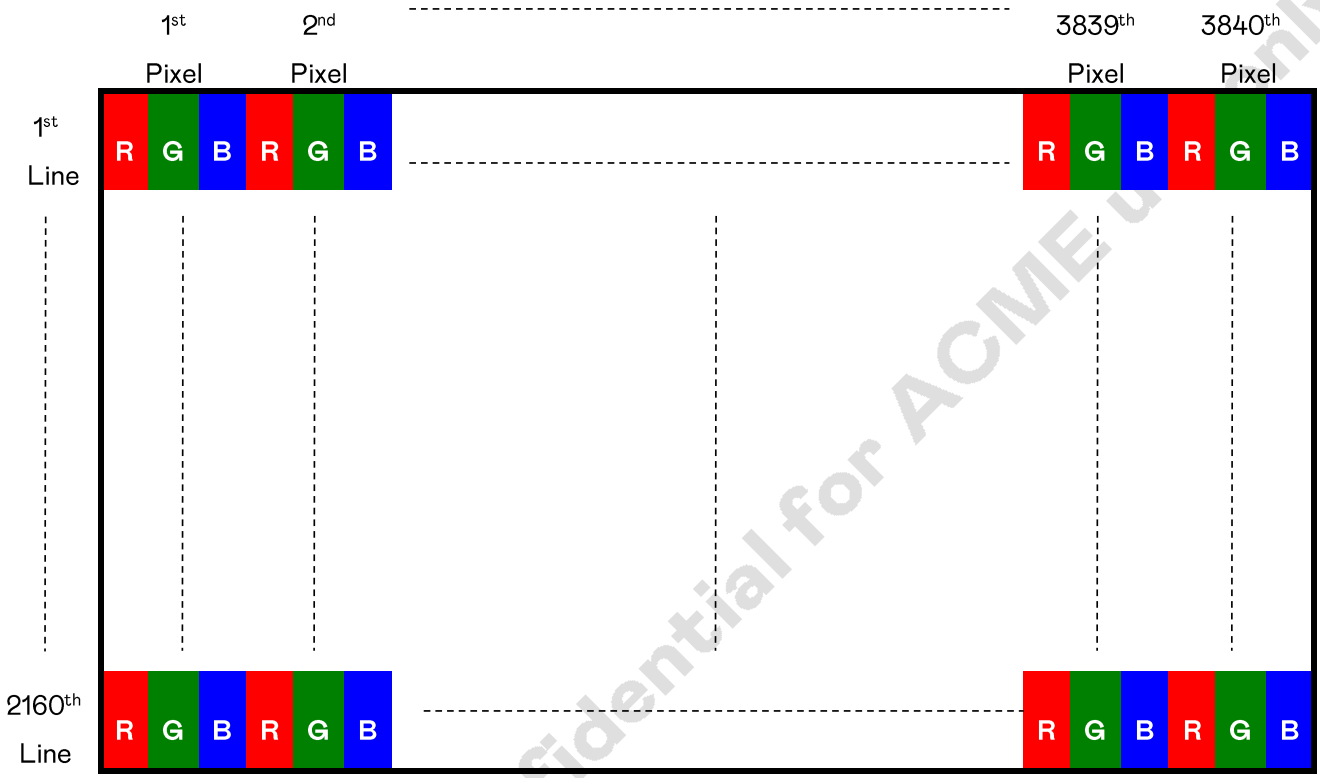

6.2 Scanning Direction

The following figures show the image seen from the front view. The arrow indicates the direction of scan.



AUO Display Plus confidential for ACME use only

© AUO Display Plus Corporation Proprietary

6.3 Signal Description

The module uses a eDP receiver embedded. eDP is a differential signal technology for LCD interface and a high-speed data transfer device.

6.3.1 TFT LCD Module: LCD Connector

Connector Name / Designation	Signal Connector
Manufacturer	P-TWO INDUSTRIES INC.;
Connector Model Number	187059-5122
Adaptable Plug	FI-RE51HL

PIN #	Symbol	Description
1	VDD	Power +12V
2	VDD	Power +12V
3	VDD	Power +12V
4	VDD	Power +12V
5	VDD	Power +12V
6	GND	Ground
7	GND	Ground
8	GND	Ground
9	NC	No connection (for AUO test only. Do not connect)
10	DP_SDA	I2C DATA
11	DP_SCL	I2C CLOCK
12	NC	No connection (for AUO test only. Do not connect)
13	NC	No connection (for AUO test only. Do not connect)
14	NC	No connection (for AUO test only. Do not connect)
15	NC	No connection (for AUO test only. Do not connect)
16	NC	No connection (for AUO test only. Do not connect)
17	GND	Ground
18	1st Lane3_N	Negative eDP differential data input
19	1st Lane3_P	Positive eDP differential data input
20	GND	Ground
21	1st Lane2_N	Negative eDP differential data input
22	1st Lane2_P	Positive eDP differential data input
23	GND	Ground
24	1st Lane1_N	Negative eDP differential data input
25	1st Lane1_P	Positive eDP differential data input
26	GND	Ground

AUO Display plus confidential for ACME use only

27	1st Lane0_N	Negative eDP differential data input
28	1st Lane0_P	Positive eDP differential data input
29	GND	Ground
30	1st AUX_CH_P	Positive AUX Channel differential data input
31	1st AUX_CH_N	Negative AUX Channel differential data input
32	GND	Ground
33	NC	No connection (for AUO test only. Do not connect)
34	GND	Ground
35	NC	No connection (for AUO test only. Do not connect)
36	NC	No connection (for AUO test only. Do not connect)
37	GND	Ground
38	NC	No connection (for AUO test only. Do not connect)
39	NC	No connection (for AUO test only. Do not connect)
40	GND	Ground
41	NC	No connection (for AUO test only. Do not connect)
42	NC	No connection (for AUO test only. Do not connect)
43	GND	Ground
44	NC	No connection (for AUO test only. Do not connect)
45	NC	No connection (for AUO test only. Do not connect)
46	GND	Ground
47	NC	No connection (for AUO test only. Do not connect)
48	NC	No connection (for AUO test only. Do not connect)
49	GND	Ground
50	HPD	Hot plug detection
51	LED_EN	LED_Enable (+3.3V)

Note 1: Input Signals shall be in low status when VDD is off.

Note1: Pin1 start position

AUO Display plus confidential for ACME use only

© AUO Display Plus Corporation Proprietary

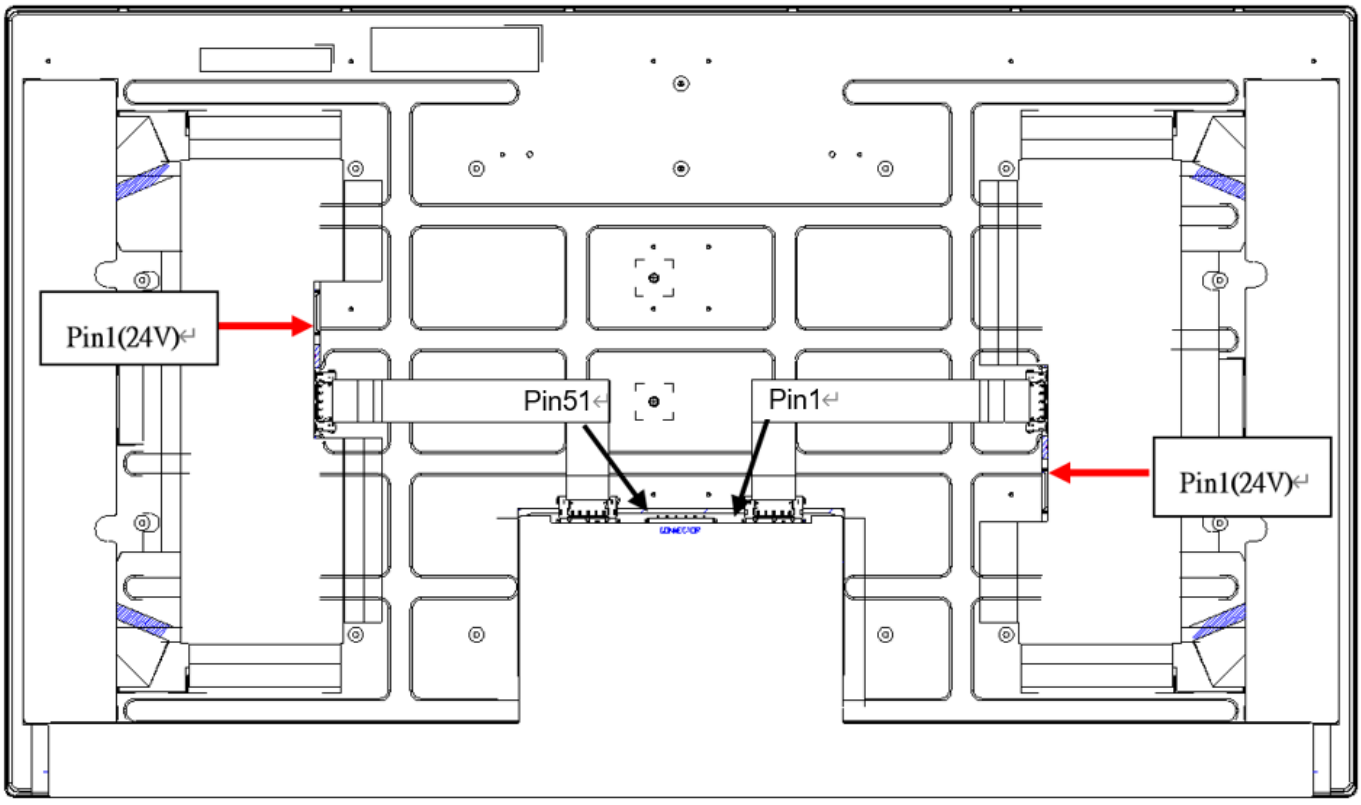

AUO Display plus confident

© AUO Display Plus Corporation Proprietary

6.4 The Input Data Format

6.4.1 eDP Data Format

The brightness of each primary color is based on the 10bit gray scale data input for the color; the higher the ninary input, the brighter the color. The table below provides a reference for color versus data input.

Lane 0	Lane 1	Lane 2	Lane 3
R0-9:2	R1-9:2	R2-9:2	R3-9:2
R0-1:0|G0-9:4	R1-1:0|G1-9:4	R2-1:0|G2-9:4	R3-1:0|G3-9:4
G0-3:0|B0-9:6	G1-3:0|B1-9:6	G2-3:0|B2-9:6	G3-3:0|B3-9:6
B0-5:0|R4-9:8	B1-5:0|R5-9:8	B2-5:0|R6-9:8	B3-5:0|R7-9:8
R4-7:0	R5-7:0	R6-7:0	R7-7:0
G4-9:2	G5-9:2	G6-9:2	G7-9:2
G4-1:0|B4-9:4	G5-1:0|B5-9:4	G6-1:0|B6-9:4	G7-1:0|B7-9:4
B4-3:0|R8-9:6	B5-3:0|R9-9:6	B6-3:0|R10-9:6	B7-3:0|R11-9:6
R8-5:0|G8-9:8	R9-5:0|G9-9:8	R10-5:0|G10-9:8	R11-5:0|G11-9:8
G8-7:0	G9-7:0	G10-7:0	G11-7:0
B8-9:2	B9-9:2	B10-9:2	B11-9:2
B8-1:0|R12-9:4	B9-1:0|R13-9:4	B10-1:0|R14-9:4	B11-1:0|R15-9:4
R12-3:0|G12-9:6	R13-3:0|G13-9:6	R14-3:0|G14-9:6	R15-3:0|G15-9:6
G12-5:0|B12-9:8	G13-5:0|B13-9:8	G14-5:0|B14-9:8	G15-5:0|B15-9:8
B12-7:0	B13-7:0	B14-7:0	B15-7:0

10bit RGB to a 4-Lane Main-Link Mapping

6.4.2 The Input Data Format(eDP)

The following table is for color versus input data (10bit). The higher the gray level, the brighter the color.

Color	Gary Level	Color Input Data																													Remark
		RED data (MSB:R9,LSB:R0)										GREEN data (MSB:G9,LSB:G0)										BLUE data (MSB:B9,LSB:B0)									
		R9	R8	R7	R6	R5	R4	R3	R2	R1	R0	G9	G8	G7	G6	G5	G4	G3	G2	G1	G0	B9	B8	B7	B6	B5	B4	B3	B2	B1	B0	
Black	-	0	0	0	0	0	0	0	0	0	0	0	0	0	0	0	0	0	0	0	0	0	0	0	0	0	0	0	0	0	0	
White	-	1	1	1	1	1	1	1	1	1	1	1	1	1	1	1	1	1	1	1	1	1	1	1	1	1	1	1	1	1	1	
L511	-	0	1	1	1	1	1	1	1	1	1	0	1	1	1	1	1	1	1	1	1	0	1	1	1	1	1	1	1	1	1	
Red	L0	0	0	0	0	0	0	0	0	0	0	0	0	0	0	0	0	0	0	0	0	0	0	0	0	0	0	0	0	0	0	Black
	:	:	:	:	:	:	:	:	:	:	:	:	:	:	:	:	:	:	:	:	:	:	:	:	:	:	:	:	:	:	:	
	L1023	1	1	1	1	1	1	1	1	1	1	0	0	0	0	0	0	0	0	0	0	0	0	0	0	0	0	0	0	0	0	
Green	L0	0	0	0	0	0	0	0	0	0	0	0	0	0	0	0	0	0	0	0	0	0	0	0	0	0	0	0	0	0	0	Black
	:	:	:	:	:	:	:	:	:	:	:	:	:	:	:	:	:	:	:	:	:	:	:	:	:	:	:	:	:	:	:	
	L1023	0	0	0	0	0	0	0	0	0	0	1	1	1	1	1	1	1	1	1	1	0	0	0	0	0	0	0	0	0	0	
Blue	L0	0	0	0	0	0	0	0	0	0	0	0	0	0	0	0	0	0	0	0	0	0	0	0	0	0	0	0	0	0	0	Black
	:	:	:	:	:	:	:	:	:	:	:	:	:	:	:	:	:	:	:	:	:	:	:	:	:	:	:	:	:	:	:	
	L1023	0	0	0	0	0	0	0	0	0	0	0	0	0	0	0	0	0	0	0	0	1	1	1	1	1	1	1	1	1	1	

Material for ACME use only

6.4.3 Timing Diagram

(Lane0~3 eDP data:1, 2, 3, 4, ...,3837,3838,3839,3840)

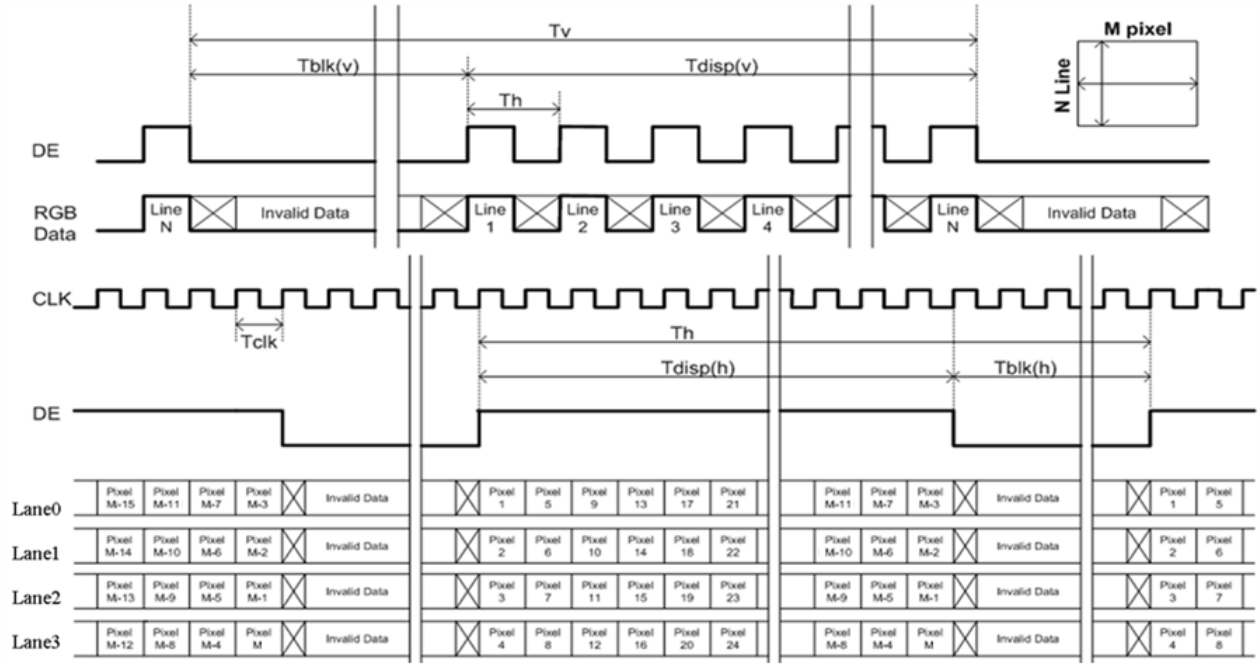

6.5 eDP Specification (Follow VESA Display Port Standard Version 1.2)

6.5.1 DisplayPort Main Link Signal:

DisplayPort Main Link					
		Min	Typ	Max	unit
Frequency	Main Link Frequency	-	5.4	-	Gbps
UI	Unit Interval	-	185	-	ps
VCM	RX input DC Common Mode Voltage	-	0	-	[Volt]
$VDiff_{P-P}$	Peak-to-peak Voltage at a receiving Device	70	-	-	[mVolt]
Down_Spread_Freq	Link clock down spread frequency	30	-	33	KHz
Down_Spread_Amplitude	Link clock down spread amplitude	-	-	0.5	%

AUO Display Plus confidential only

© AUO Display Plus Corporation Proprietary

Point	Time(UI)	Voltage (V)
1	0.310	0
2	0.375~0.625	35mV
3	0.310	0
4	0.375~0.625	-35mV

Downstream Device EYE Mask at Receiver Connector for HBR2

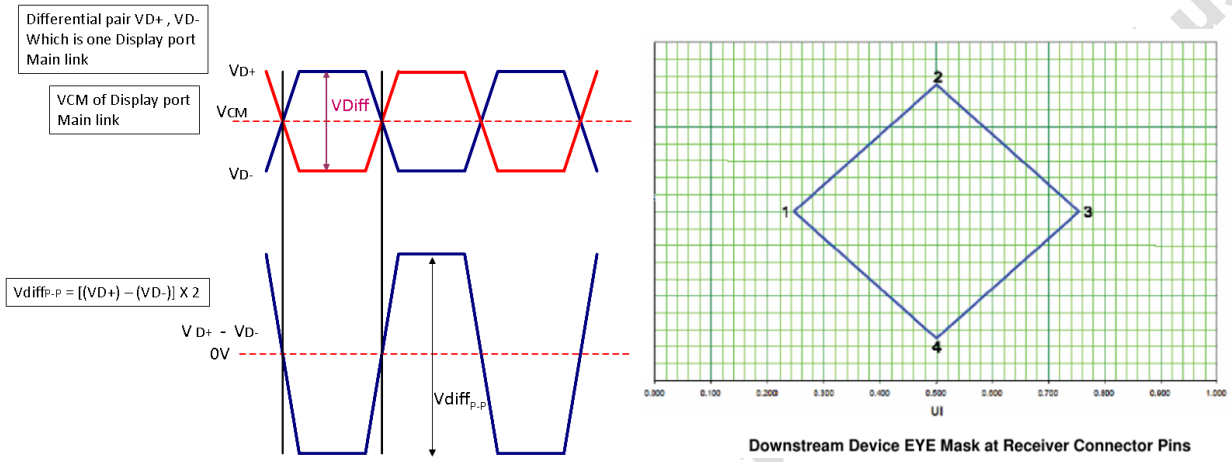

Downstream Device EYE Mask at Receiver Connector Pins

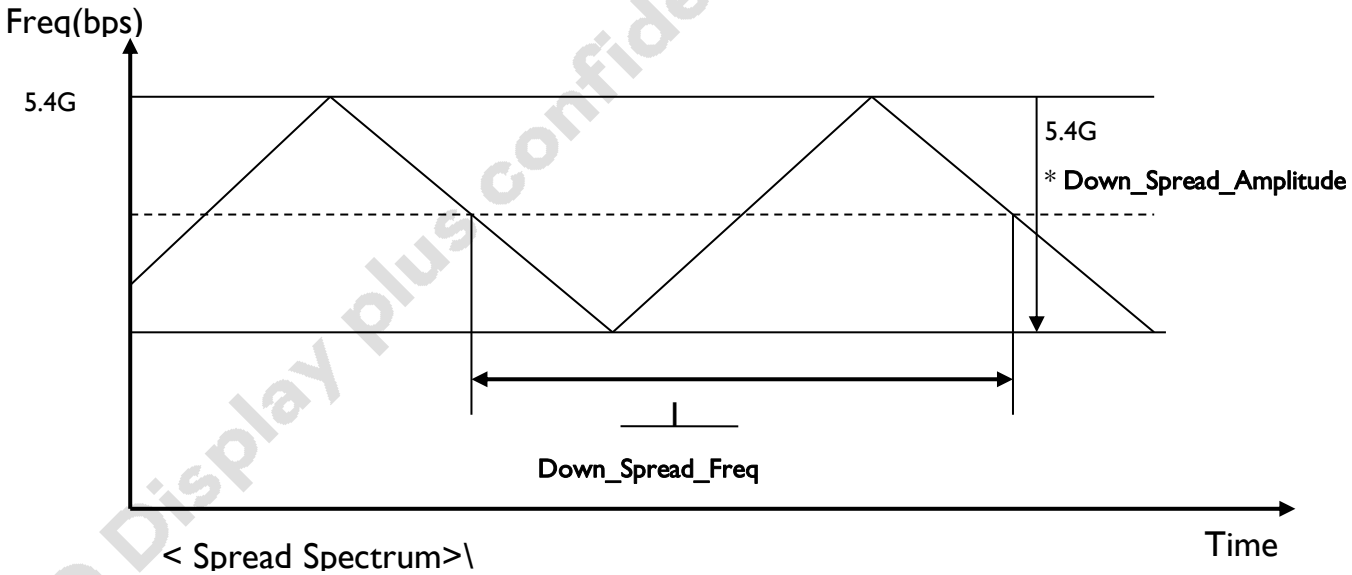

AUO Display plus confidential use only

© AUO Display Plus Corporation Proprietary

6.5.2 DisplayPort AUX_CH Signal:

DisplayPort AUX_CH					
		Min	Typ	Max	unit
VCM	AUX DC Common Mode Voltage	-	0	-	[Volt]
$VDiff_{P-P}$	AUX Peak-to-peak voltage at a receiving device	70	-	-	[mVolt]

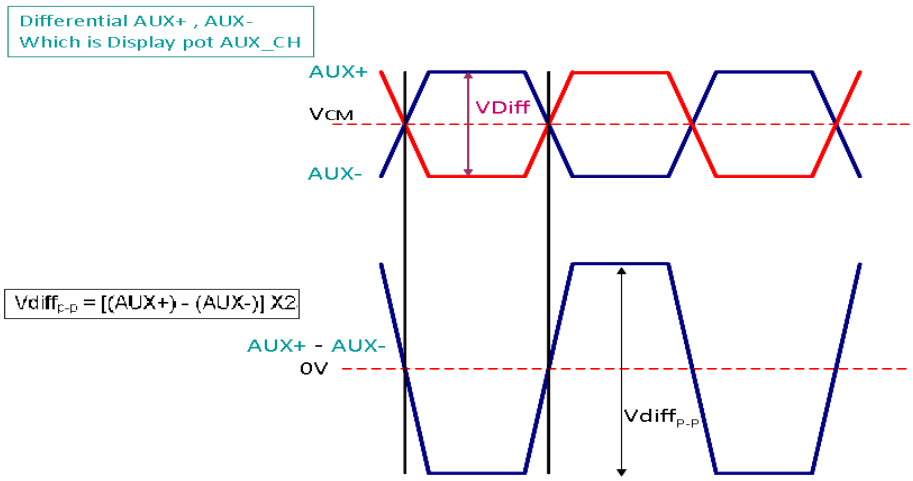

6.5.3 DisplayPort VHPD Signal:

Display Port VHPD					
		Min	Typ	Max	unit
VHPD	HPD Voltage	2.25	-	3.6	[Volt]

6.5.3 Intra-Pair Skew:

LRX-SKEW-INTRA_PAIR					
		Min	Typ	Max	unit
LRX-SKEW-INTRA_PAIR	Lane Intra-pair Skew Tolerance	-	-	50	[ps]

6.5.4 Inter-Pair Skew

LRX-SKEW-INTER_PAIR					
		Min	Typ	Max	unit
LRX-SKEW-INTER_PAIR	Lane-to-Lane Skew at RX package pins	-	-	5700	[ps]

AUO Display plus confidential - use only

© AUO Display Plus Corporation Proprietary

6.6 Interface Timing

6.6.1Timing Characteristics

The input timing is shown as the following table.

Symbol	Description		Min.	Typ.	Max.	Unit	Remark
Tv	Vertical Section	Period	2184	2200	2280	Th	
Tdisp (v)		Active	2160	2160	2160	Th	
Tblk (v)		Blanking	24	40	120	Th	
Fv		Frequency	49	60	61	Hz	***Note 6-6***
Th	Horizontal Section	Period	3920	4120	4240	Tclk	
Tdisp (h)		Active	3840	3840	3840	Tclk	
Tblk (h)		Blanking	80	280	400	Tclk	
Fh		Frequency	107.1	132	144.4	kHz	***Note 6-4***
Tclk	Pixel Clock	Period	1.77	1.84	2.38	ns	1/Fclk
Fclk		Frequency	419.50	543.8	566.28	MHz	***Note 6-5***
Link Rate per Lane			5.4			Gbps	5.4

Note 6-4: The equation is listed as following. Please don't exceed the above recommended value.

Fh (Min.) = Fclk (Min.) / Th (Min.)
Fh (Typ.) = Fclk (Typ.) / Th (Typ.)
Fh (Max.)= Fclk (Max.) / Th (Min.)

Note 6-5: The equation is listed as following. Please don't exceed the above recommended value.

1st Lane N & 2nd Lane N skew < 200ns

Fclk (Typ.) = Fv (Typ.) x Th (Typ.) x Tv (Typ.)

Fclk (Min.)≦Fv x Th x Tv ≦ Fclk (Max.)

Note 6-6: The equation is listed as following. Please don't exceed the above recommended value.

Fv =Fclk(Typ.) / (Tv x Th)

AUO Display Plus Confidential for AOME use only

© AUO Display Plus Corporation Proprietary

6.7 Power ON/OFF Sequence

VDD power and lamp VLED on/off sequence is as below. Interface signals are also shown in the chart. Signals from any system shall be Hi-Z state or low level when VDD is off.

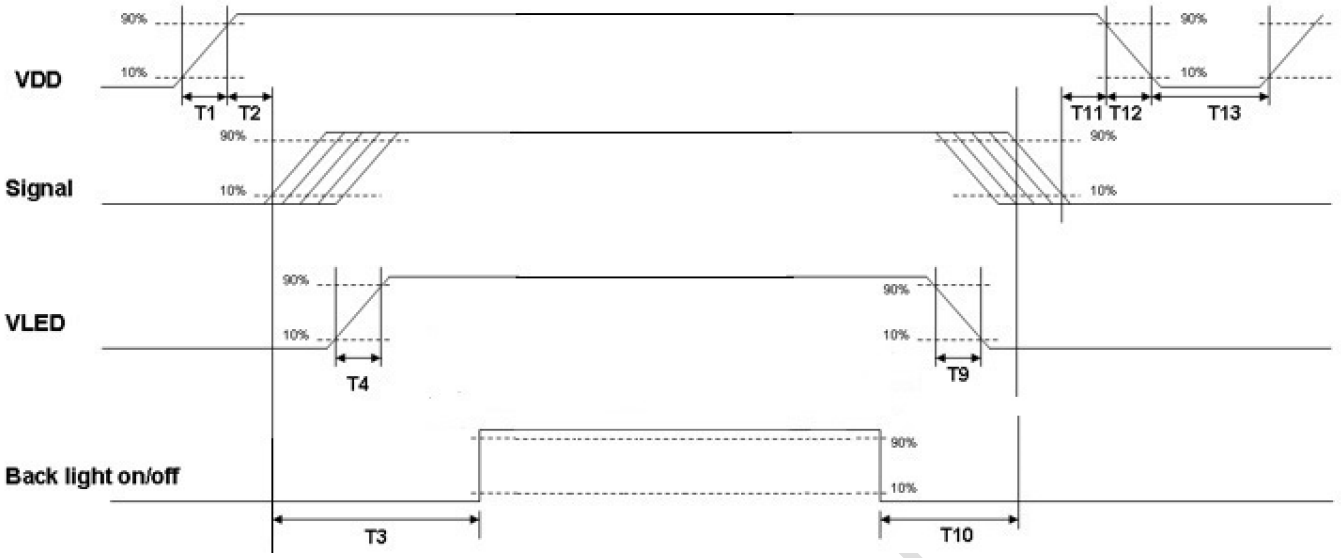

Power sequence timing

Parameter	Value			Units
	Min.	Typ.	Max.	
T1	0.5	-	10	ms
T2	40	-	-*1	
T3	200	-	-	
T4	0.5	-	10	
T5	-	-	10	
T9	110	-	-	
T11	0	16	50	
T12	0	-	10	
T13	1000	-	-	

Note 1(T2) : The maximum timing of VDD rising(90%) to HTPDN falling edge decided by customer system.

AUO Display plus confidential for

6.8 I2C Command Format for Luminance Adjustment

	Description	D0 (MSB)	D1	D2	D3	D4	D5	D6	D7 (LSB)	Note
	DDC_CMD_LDPQ_WRITE	DDC Write/Read	CMD_ID		Sub Cmdldx	Data	Reserved		Check Sum	
1	Global Dimming Strength	7C	1D	01	01	00 ~ FF	00	00	D0+D1+D2+D3+D4+D5 @last-2- digit in Hex Ex: Parameter 1 : 7C 1D 01 01 FF 00 00 1E Checksum = 1D+01+ 01+ FF+ 00+ 00 = 1E	255=100% PWM Dimming 0=0% PWM dimming
2	Local Dimming Disable	7C	1D	10	7A	00	00	00	A7	Local Dimming Disable
3	Local Dimming Enable	7C	1D	11	00	00	00	00	2E	Local Dimming Enable

6.9 Power on Sequency of I2C Command Format

Parameter	Value			Units
	Min.	Typ.	Max.	
T1	0.5	-	10	ms
T2	40	-	-*1	
T3	200	-	-	
T4	0.5	-	10	
T5	-	-	10	
T9	110	-	-	
T6	500	-	-	
T11	0	16	50	
T12	0	-	10	
T13	1000	-	-	

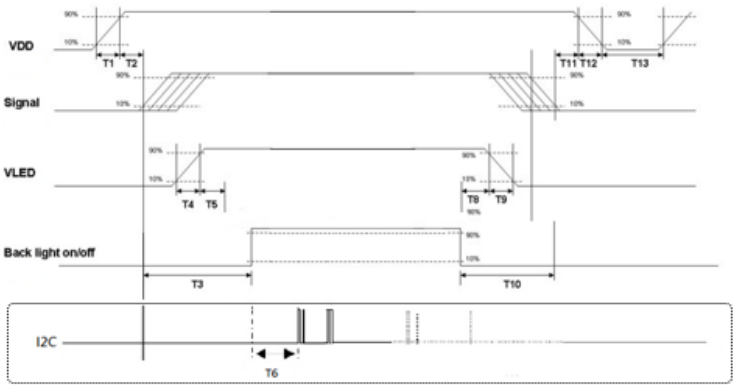

© AUO Display Plus Corporation Proprietary

7. Reliability Test Criteria

All testing under following setting: VDD 12V, Frame rate: 60Hz

Items	Required Condition	Note
Temperature Humidity Bias (Ta)	50℃/80%,300Hr	
High Temperature Operation (Ta)	50℃, 300Hr	
Low Temperature Operation (Ta)	0℃, 300Hr	
Hot Storage	60℃, 300 hours	
Cold Storage	-20℃, 300 hours	
Thermal Shock Test (Ta)	-20℃ /30 min ,60 ℃ /30 min ,100cycles, 40℃ minimun ramp rate	
Shock Test (Non-Operating)	50G,20ms,Half-sine wave,(+-X,+-Y,+-Z)	
Vibration Test (Non-Operating)	1.0G, 10~300Hz, Random wave 10mins/axis, 3 direction (X, Y, Z)	
Altitude Test	Operation : 10,000ft Non-Operation : 30,000ft	
ESD	Contact : ± 8KV/ operation, Class B Air : ± 15KV / operation, Class B	Note 1

Note1: According to EN61000-4-2, ESD class B: Some performance degradation allowed. No data lost . Self-recoverable. No hardware failures.

Note2:

- Water condensation is not allowed for each test items.
- Each test is done by new TFT-LCD module. Don't use the same TFT-LCD module repeatedly for reliability test.
- The reliability test is performed only to examine the TFT-LCD module capability.
- To inspect TFT-LCD module after reliability test, please store it at room temperature and room humidity for 24 hours at least in advance.
- No function failure occurs.

AUO Display Plus confidential for ACME use only

8. Mechanical Characteristics

8.1 LCM Outline Dimension

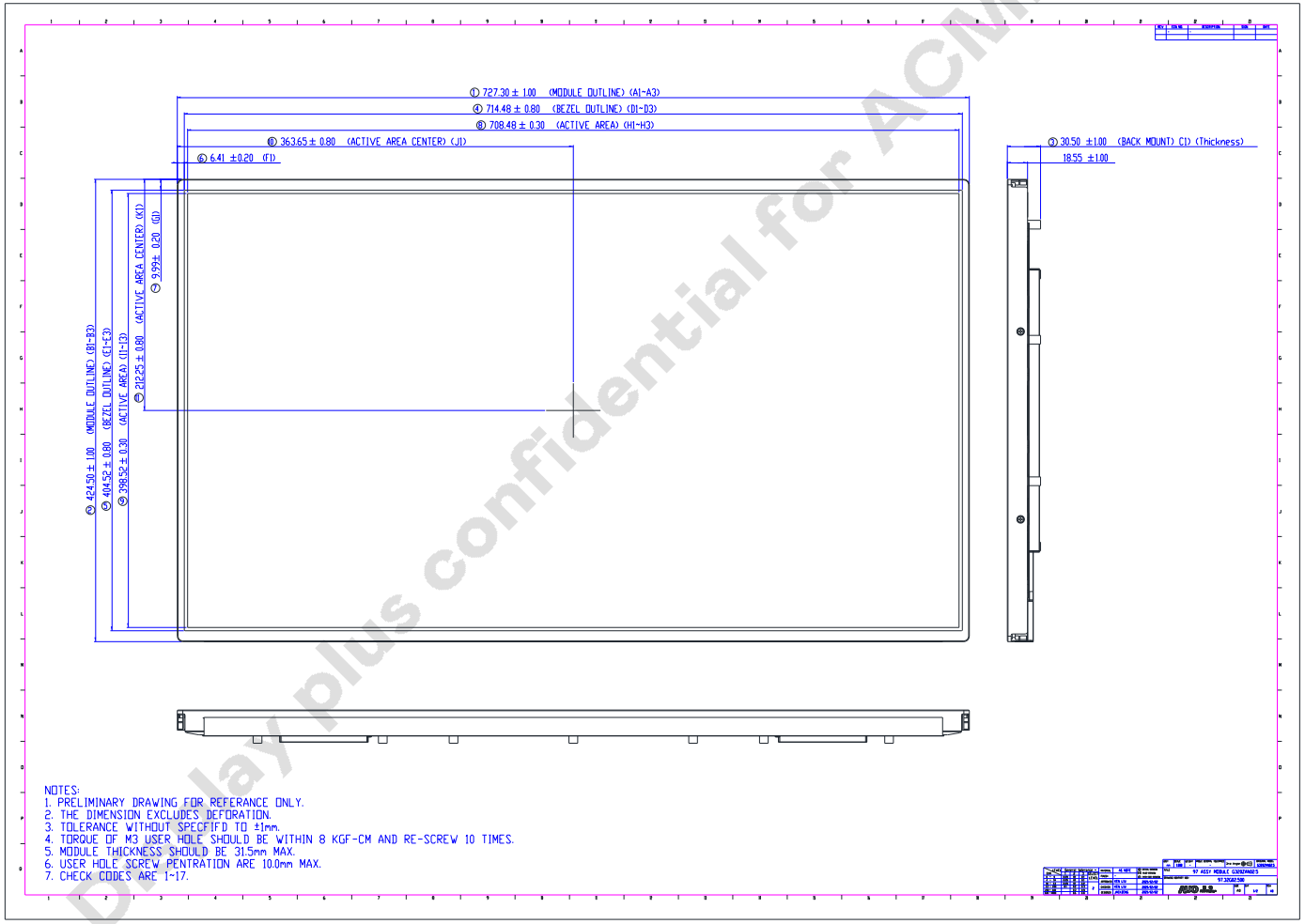

AUO Display plus confidential for ACME use only

© AUO Display Plus Corporation Proprietary

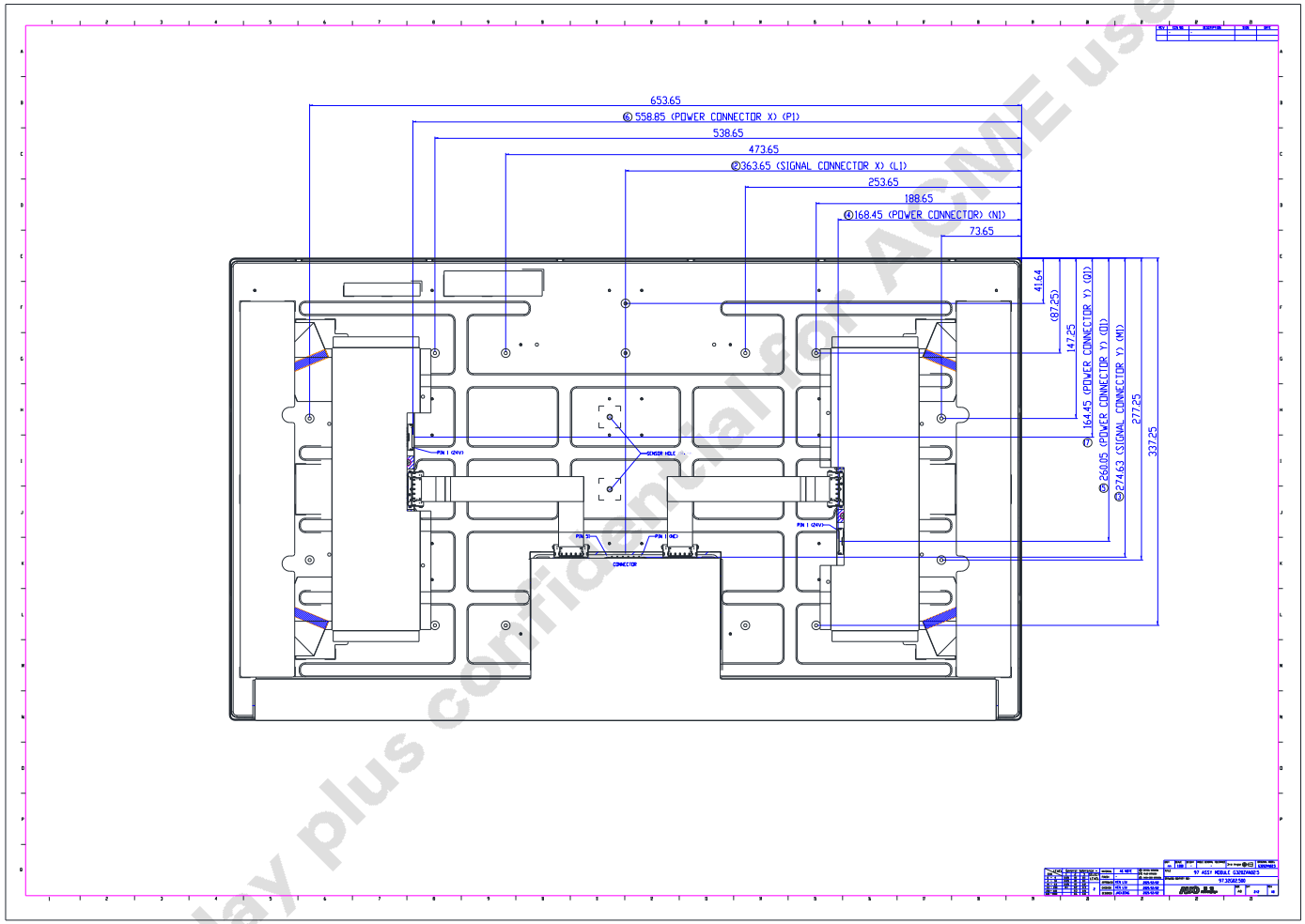

AUO Display plus confidential for ACWE use only

© AUO Display Plus Corporation Proprietary

9. Label and Packaging

9.1 Shipping Label (on the rear side of TFT-LCD display)



9.2 Carton Package

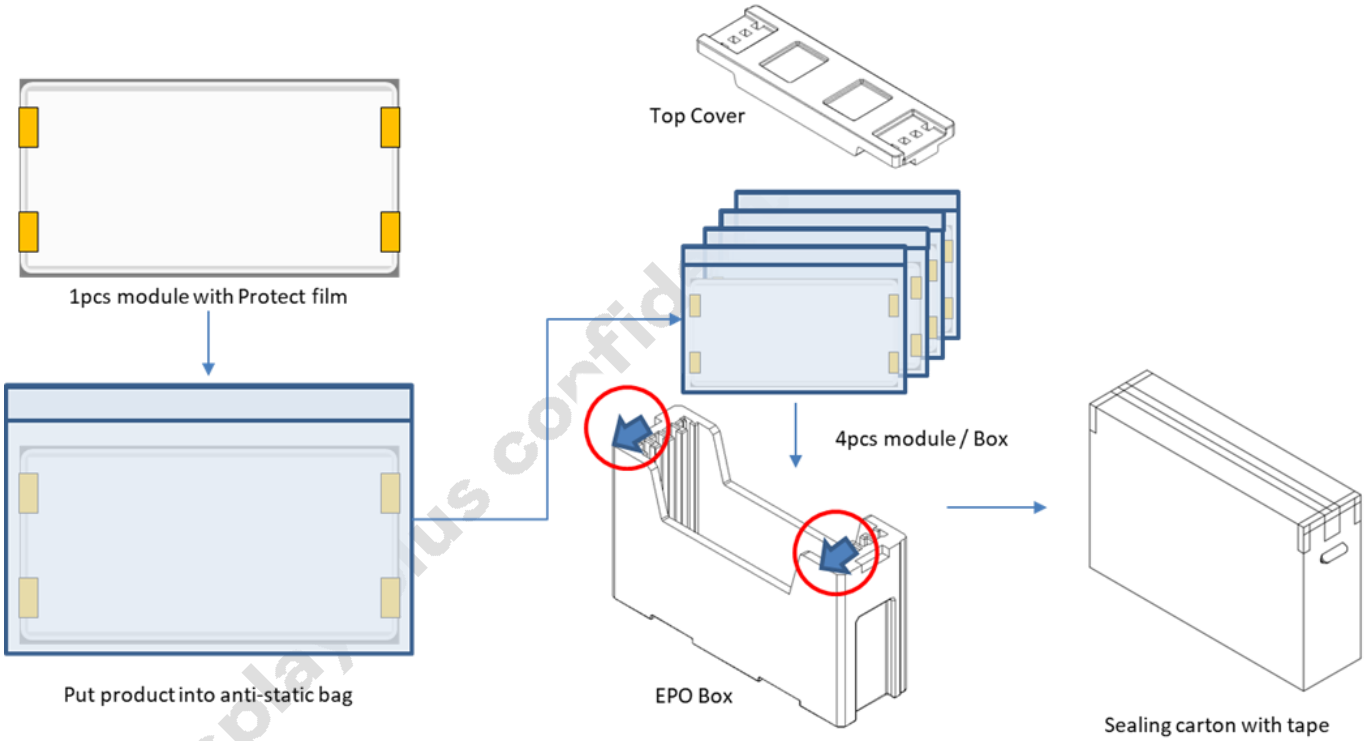

Capacity: 4 modules /carton

Weight: 22±0.5 kg

Carton Dim.: 868(L)mm* 271(W)mm*562(H)mm

Pallet Dim.: 1150(L)mm* 910(W)mm* 132(H)mm

ICME use only
AUO Display Plus confid

© AUO Display Plus Corporation Proprietary

10 Safety

10.1 Sharp Edge Requirements

There will be no sharp edges or comers on the display assembly that could cause injury.

10.2 Materials

10.2.1 Toxicity

There will be no carcinogenic materials used anywhere in the display module. If toxic materials are used, they will be reviewed and approved by the responsible AUO toxicologist.

10.2.2 Flammability

All components including electrical components that do not meet the flammability grade UL94-V1 in the module will complete the flammability rating exception approval process.

The printed circuit board will be made from material rated 94-V1 or better. The actual UL flammability rating will be printed on the printed circuit board.

10.3 Capacitors

If any polarized capacitors are used in the display assembly, provisions will be made to keep them from being inserted backwards.

10.4 National Test Lab Requirement

The display module will satisfy all requirements for compliance to:

UL 60950-1 second edition	U.S.A. Information Technology Equipment

AUO Display plus confidential for ACME use only

© AUO Display Plus Corporation Proprietary