REV	DATE	DESCRIPTION	DRAFT	APPROVED
0	2025-08-11	INITIAL RELEASE	Laslie Chen	
1	2025-08-25	TS RELEASE	Laslie Chen	

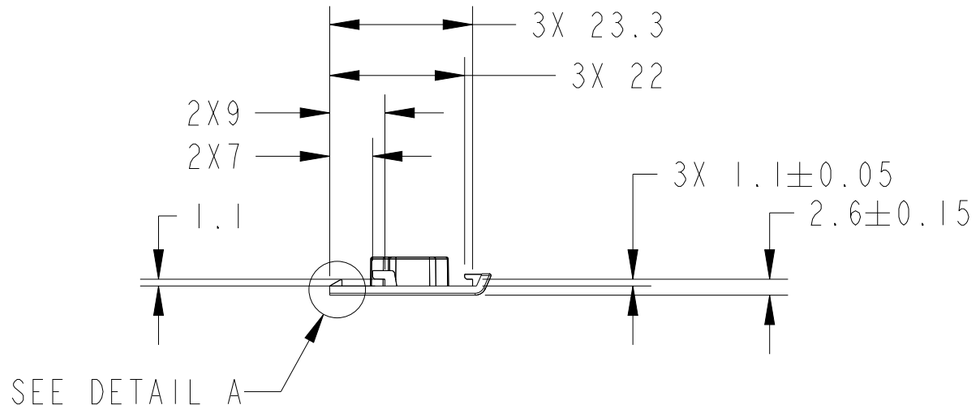

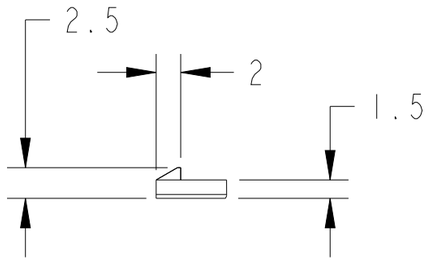

DETAIL A
SCALE 2:1

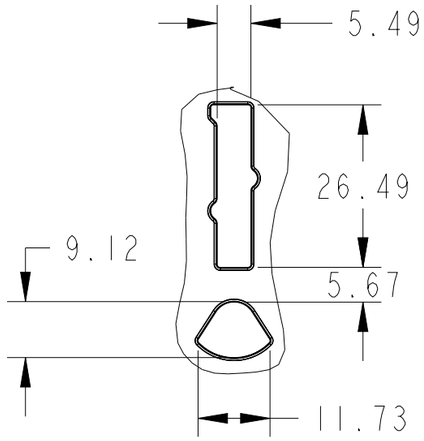

DETAIL B
SCALE 1:1

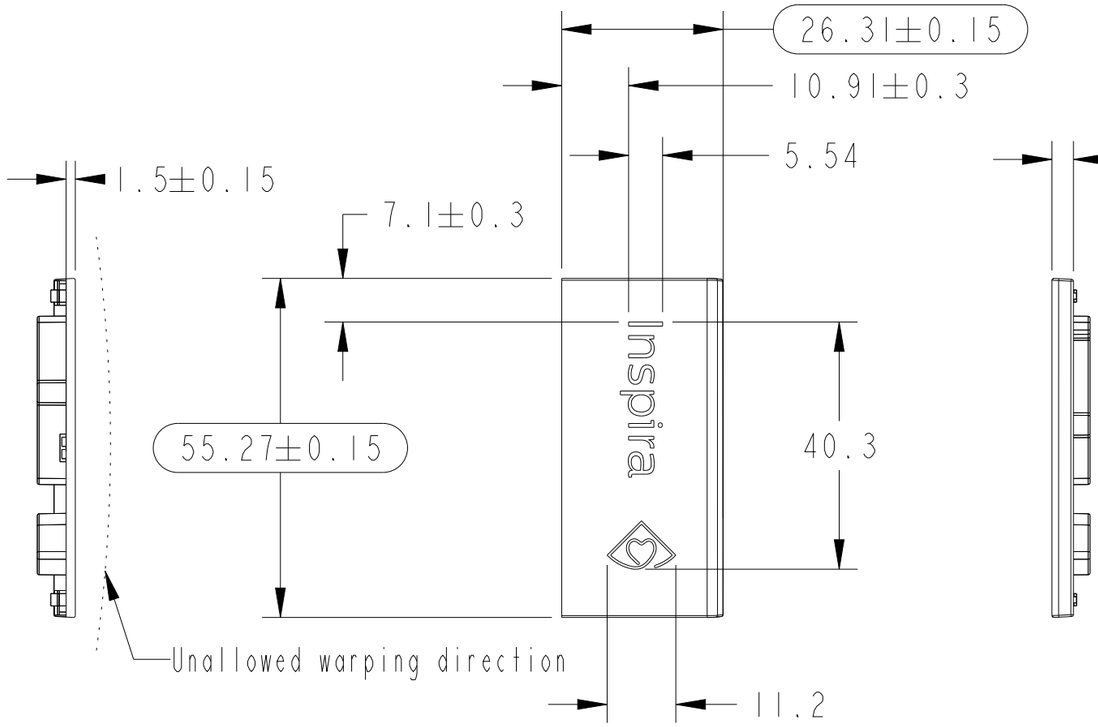

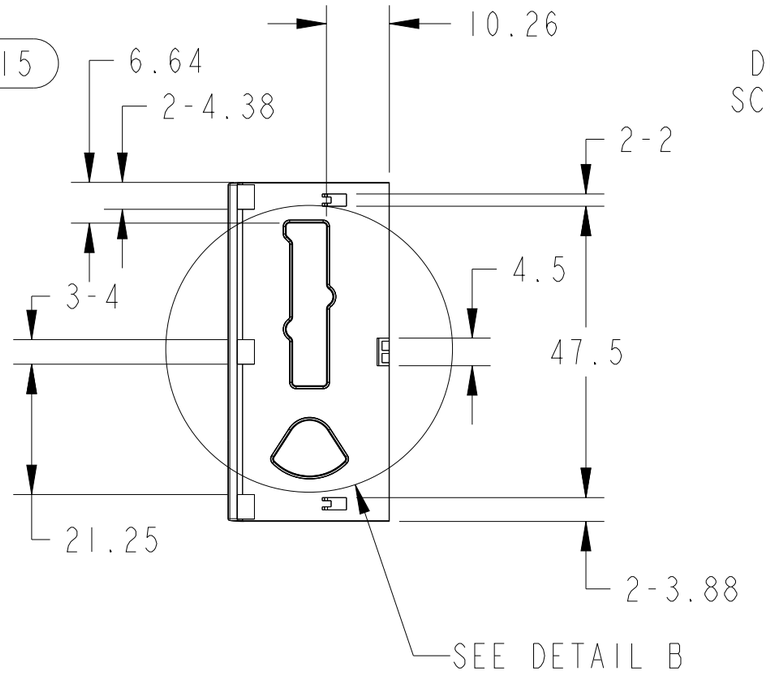

NOTE:
1. Resin Material: PC.
2. Resin Color:Translucent white.
3. Texture : MT-11010.
4. Painting (3 layer):
   Base color: White.
   Light mask color: Black.
   Appearance color: Red, PANTONE 186C.
5. Laser Removal:
   Laser removal to white paint layer.
6. Unspecified dimension refer to CAD drawing file.
7. Warpage and flatness tolerance : <0.1 mm .
8. Packing : PE bag.
9. RoHS Compliant.

TOOLING NO.	3MD695P5000

UNLESS OTHERWISE SPECIFIED ALL DIMENSIONS ARE IN MM.
TOLERANCES:
.X = ± 0.5
.XX = ± 0.30
.XXX = ± 0.150
ANGLE = ± 1.0°
INTERPRET DIM AND TOL PER ASME Y14.5-2009

THIRD ANGLE PROJECTION

MATERIAL:	FINISH:	DIVA Laboratories. Ltd.				
PC	Note					
DRAWN BY: Laslie Chen 2025-07-24		PART NAME: BADGE COVER				
CHECKED BY:		PART NUMBER: 3MD695P5010		MFG. PART NUMBER: NA		
APPROVED BY:		MODEL NAME: VM15	SIZE: A3	SCALE: 1:1	SHEET: 1 OF 2	REV: 1
FILE NAME: 027.216_BADGE_COVER	APPROVED NO.:	THIS DOCUMENT IS SUPPLIED IN CONFIDENCE. NO REPRODUCTION OF THIS DOCUMENT IN PART OR IN WHOLE OR THEREON OF THE ITEMS SHOWN MAY BE MADE WITHOUT THE COPYRIGHT OWNERS WRITTEN PERMISSION.				

Luminance capability:
60 +/-20Cd/m2 at outside surface of badge artwork.
Measurement shall be performed with VM15 Badge Board and CA410.

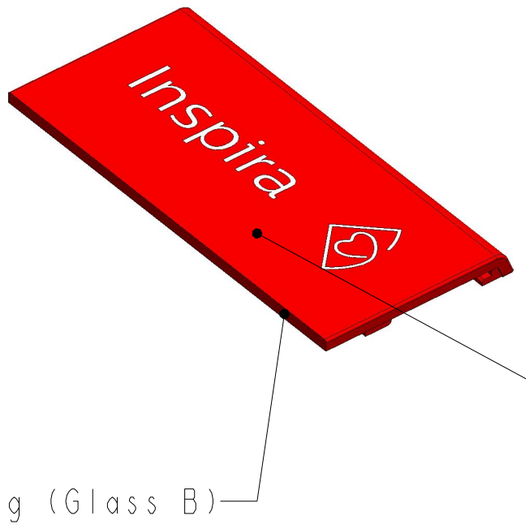

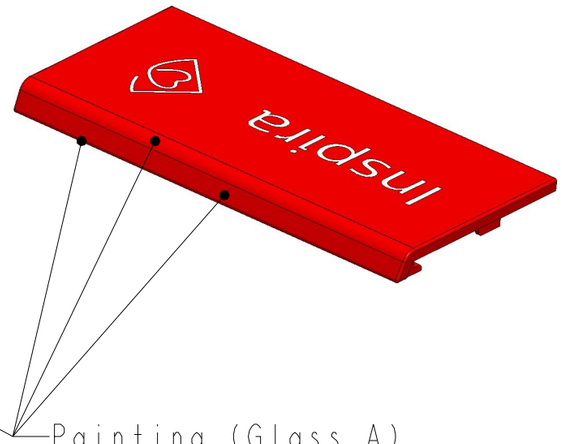

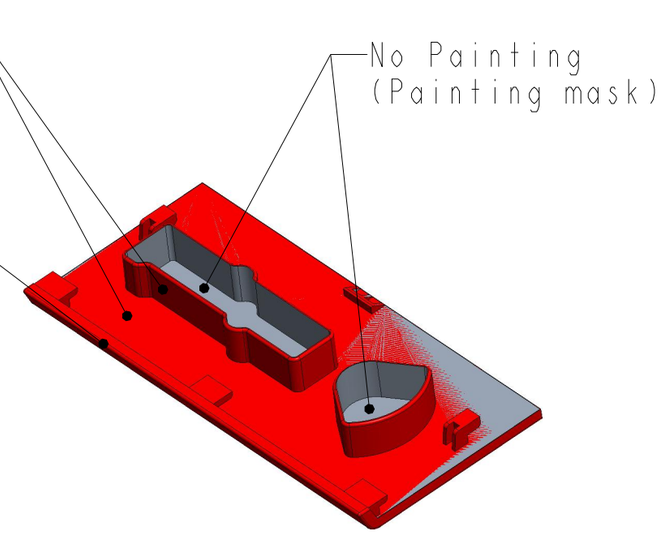

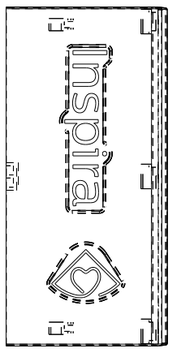

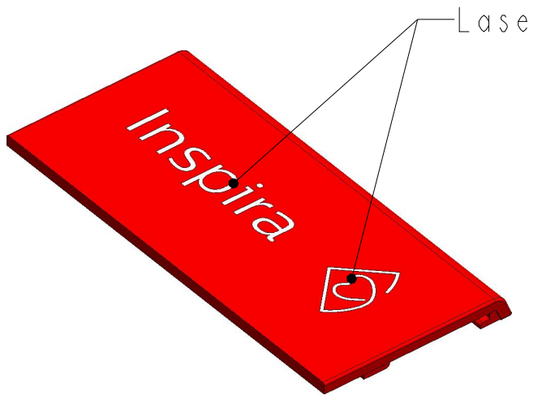

DIVA Laboratories. Ltd.

PART NAME:				
BADGE COVER				
PART NUMBER: 3MD695P5010		MFG. PART NUMBER NA		
MODEL NAME: VM15	SIZE: A3	SCALE: 1:1	SHEET: 2 OF 2	REV 1

THIS DOCUMENT IS SUPPLIED IN CONFIDENCE. NO REPRODUCTION OF THIS DOCUMENT IN PART OR IN WHOLE OR THEREON OF THE ITEMS SHOWN MAY BE MADE WITHOUT THE COPYRIGHT OWNERS WRITTEN PERMISSION.