REV	DATE	DESCRIPTION	DRAFT	APPROVED
0	2025-08-06	INITIAL RELEASE	Laslie Chen	
1	2025-08-21	TS RELEASE	Laslie Chen	



SECTION Y-Y



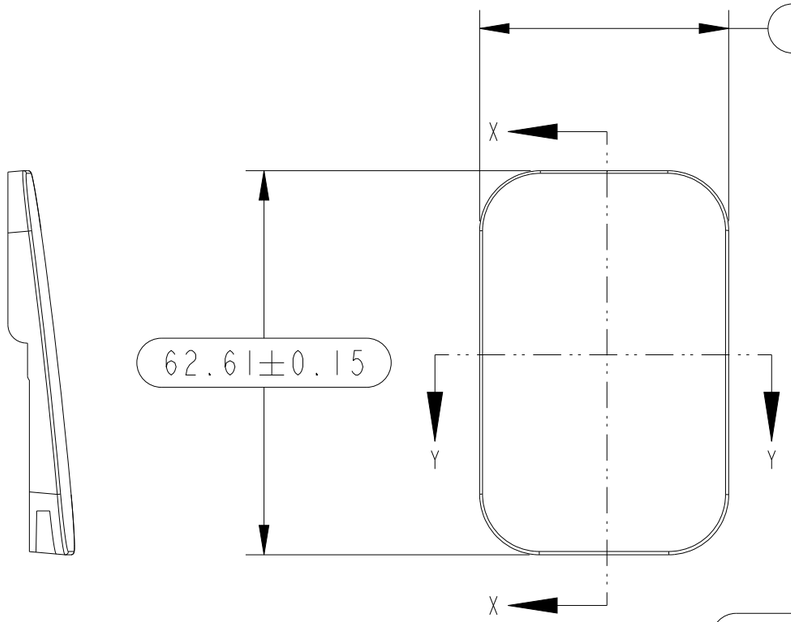

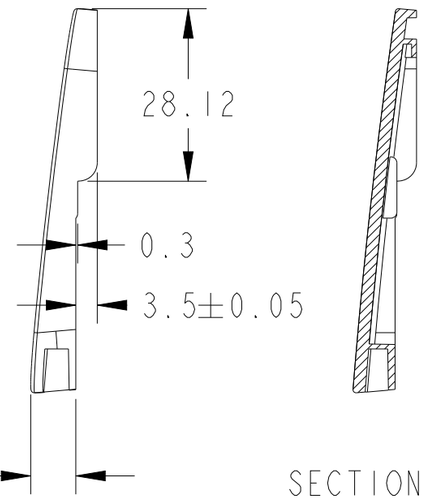

SECTION X-X

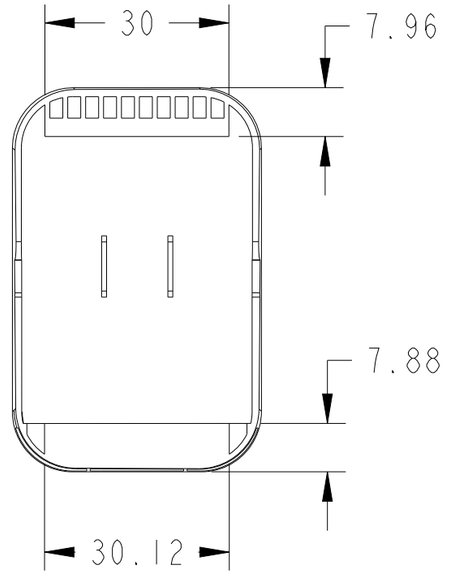

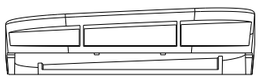

NOTE:
1. Material: PC+ABS, Bayblend FR3010.
2. Resign Color:Alpline white-90273.
3. Finish Color:Alpline white-90273.
4. Textuer : MT-11010.
5. Generally Thickness:2.0 mm
6. Unspecified dimension refer to CAD drawing file.
7. Warpage and flatness tolerance : <0.1 mm .
8. Packing : PE bag.
9. RoHS Compliant.

TOOLING NO.	3MD695P6000

UNLESS OTHERWISE SPECIFIED ALL DIMENSIONS ARE IN MM.
TOLERANCES:
.X = ± 0.5
.XX = ± 0.30
.XXX = ± 0.150
ANGLE = ± 1.0°
INTERPRET DIM AND TOL PER ASME Y14.5-2009

THIRD ANGLE PROJECTION

MATERIAL: PC+ABS	FINISH:	DIVA Laboratories. Ltd.			
DRAWN BY: Laslie Chen 2025-08-06		PART NAME: USB HUB COVER			
CHECKED BY:		PART NUMBER: 3MD695P6010	MFG. PART NUMBER: NA		
APPROVED BY:		MODEL NAME: VM15	SIZE: A3	SCALE: 1:1	SHEET: 1 OF 1 / REV: 1
FILE NAME: 027_216_USB_HUB_COVER	APPROVED NO.:				

THIS DOCUMENT IS SUPPLIED IN CONFIDENCE. NO REPRODUCTION OF THIS DOCUMENT IN PART OR IN WHOLE OR THEREON OF THE ITEMS SHOWN MAY BE MADE WITHOUT THE COPYRIGHT OWNERS WRITTEN PERMISSION.