REV	DATE	DESCRIPTION	DRAFT	APPROVED
0	2025-07-24	INITIAL RELEASE	Laslie Chen	
1	2025-08-25	TS RELEASE	Laslie Chen	

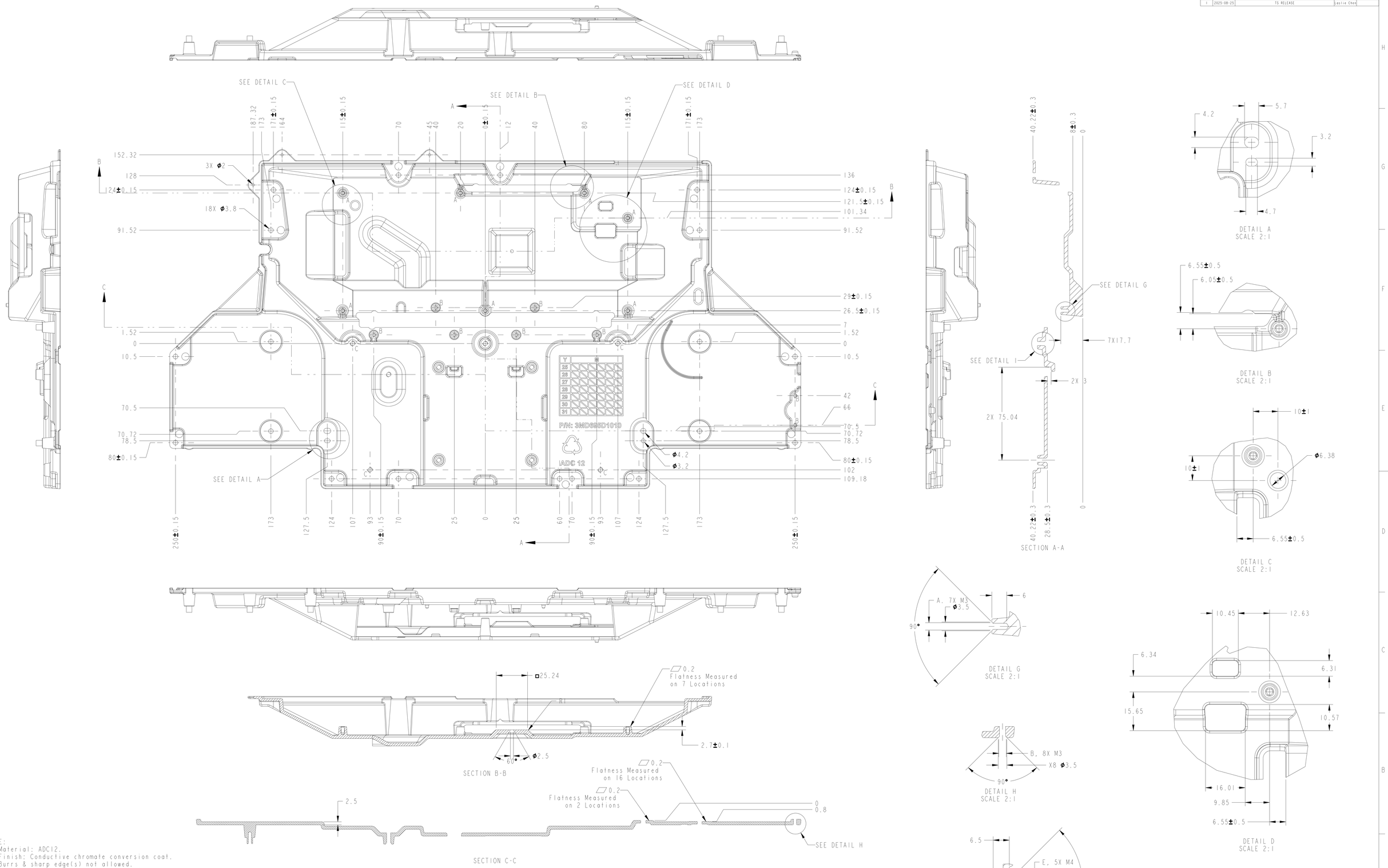

NOTE:
1. Material: ADC12.
2. Finish: Conductive chromate conversion coat.
3. Burrs & sharp edge(s) not allowed.
   Based on the principle of not hurtting hands.
4. Deformation and flatness Distortion <0.5mm.
5. Weight: TBD g
6. Unspecified Dimension refer to CAD Drawing file.
7. Threaded inspection: see table.
8. Threaded Torque:
   M3 >10kgf/cm
   M4 >14kgf/cm
   M4 Helicoil Inserts: >22kgf/cm.
9. Packing:Reference packing list of the supplier SOP.
10. RoHS Compliant

INSPECTION

ITEM	THREADED TYPE	THREADED DEPTH	Q'TY	REMARK
A	M3	>5.0	7	
B	M3	Through	8	
C	M4	Through	5	

TOOLING NO. 3MD695D1000

UNLESS OTHERWISE SPECIFIED ALL DIMENSIONS ARE IN MM. TOLERANCES:
.X ± 0.5
.XX ± 0.3
.XXX ± 0.1
ANGLE ± 1.5°
INTERPRET DIM AND TOL PER ASME Y14.5-2009

THIRD ANGLE PROJECTION

MATERIAL: ADC12
FINISH:
DRAWN BY: Laslie Chen 2025-06-26
CHECKED BY:
APPROVED BY:
FILE NAME: 027.214.MAIN.DWT
APPROVED NO.:

DNA Laboratories. Ltd.
PART NAME: MAIN BRACKET
PART NUMBER: 3MD695D1010
MFG. PART NUMBER: NA
MODEL NAME: VM15
SIZE: A0
SCALE: 1:1
SHEET: 1 OF 3
REV: 1

THIS DOCUMENT IS SUPPLIED IN CONFIDENCE. NO REPRODUCTION OF THIS DOCUMENT IS PART OR IN WHOLE OR THEREIN OF THE TITLE SHOWN MAY BE MADE WITHOUT THE COPYRIGHT OWNER'S WRITTEN PERMISSION.

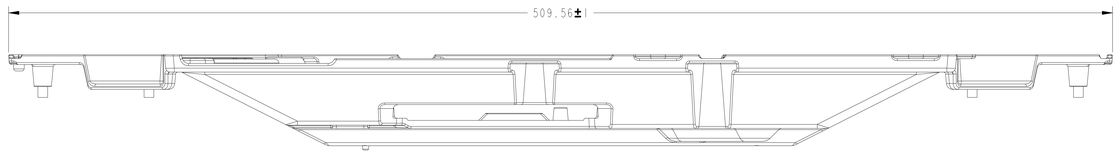

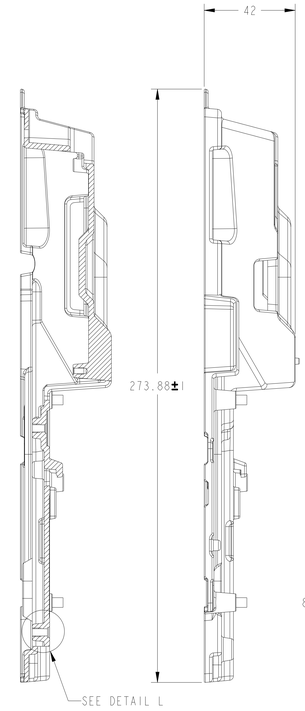

SECTION A-A

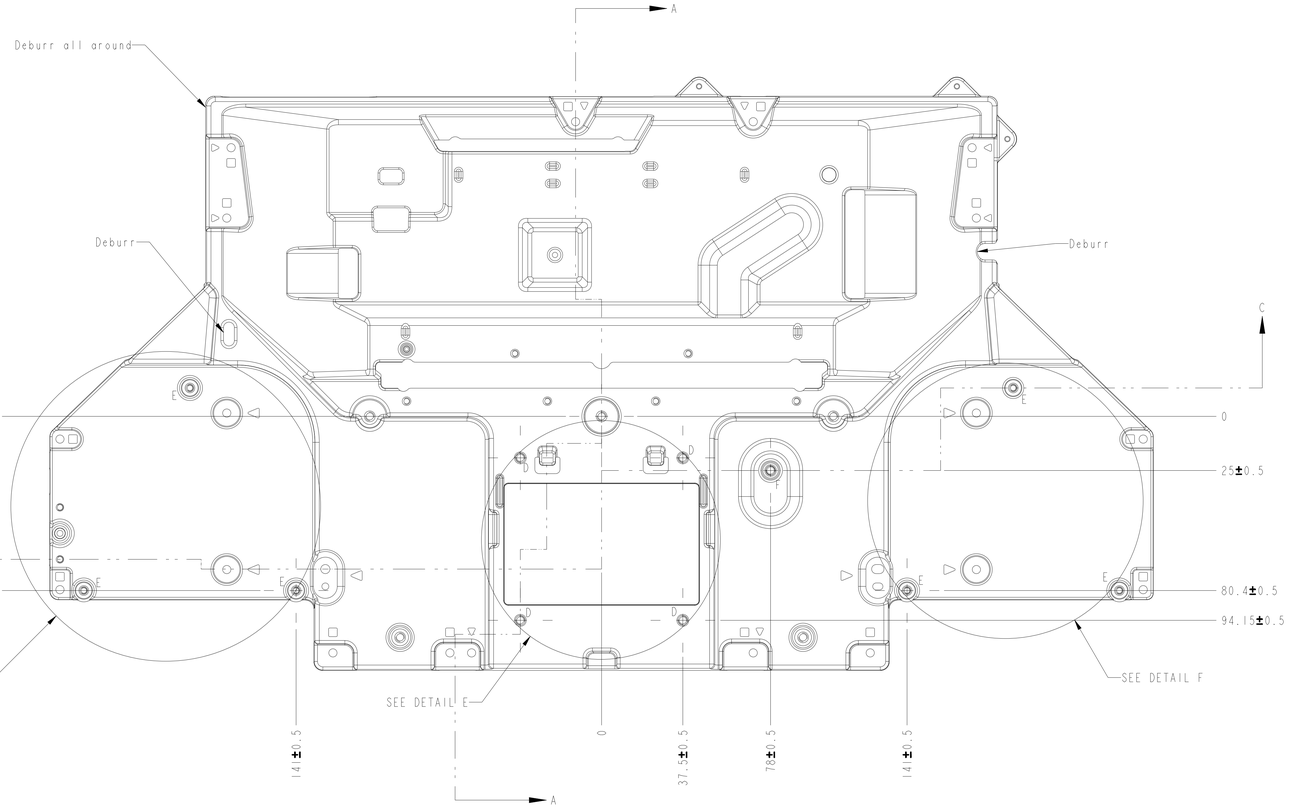

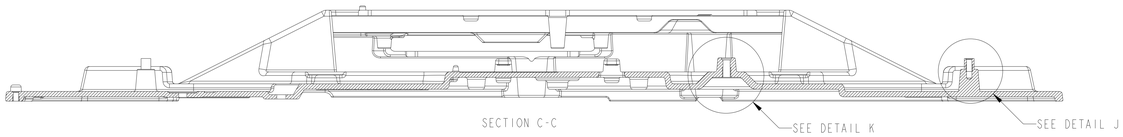

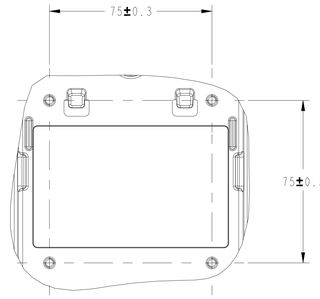

DETAIL E
SCALE 1:1

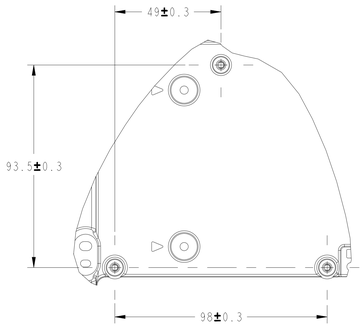

DETAIL F
SCALE 1:1

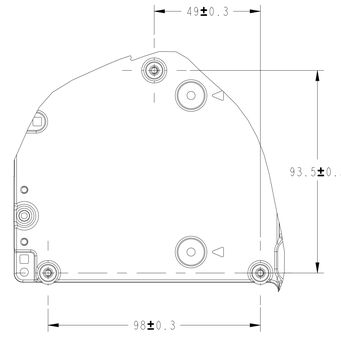

DETAIL M
SCALE 1:1

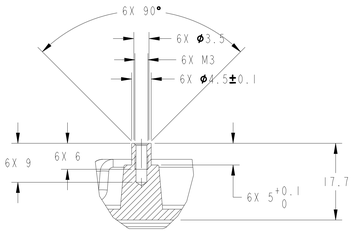

DETAIL J
SCALE 2:1

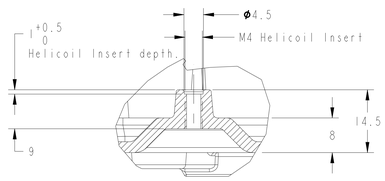

DETAIL K
SCALE 2:1

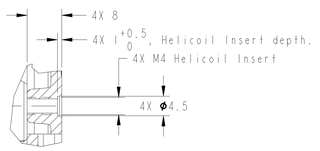

DETAIL L
SCALE 2:1

INSPECTION				
ITEM	THREADED TYPE	THREADED DEPTH	Q'TY	REMARK
D	M4 Helicoil Insert	6.0 (1.5D)	4	Helicoil insert to be installed 1.0~1.5 mm below surface.
E	M3	>6.0	6	
F	M4 Helicoil Insert	6.0 (1.5D)	1	Helicoil insert to be installed 1.0~1.5 mm below surface.

DIVA Laboratories. Ltd.

PART NAME: MAIN BRACKET				
PART NUMBER: 3MD695DI010		MFG. PART NUMBER: NA		
MODEL NAME: VMI5	SIZE: A0	SCALE: 1:1	SHEET: 2 OF 3	REV: 1

THIS DOCUMENT IS SUPPLIED IN CONFIDENCE - NO REPRODUCTION OF THIS DOCUMENT, IN PART OR IN WHOLE, OR TRANSFER OF THE ITEMS SHOWN MAY BE MADE WITHOUT THE COPYRIGHT OWNERS WRITTEN PERMISSION.

Machining "Front Side"

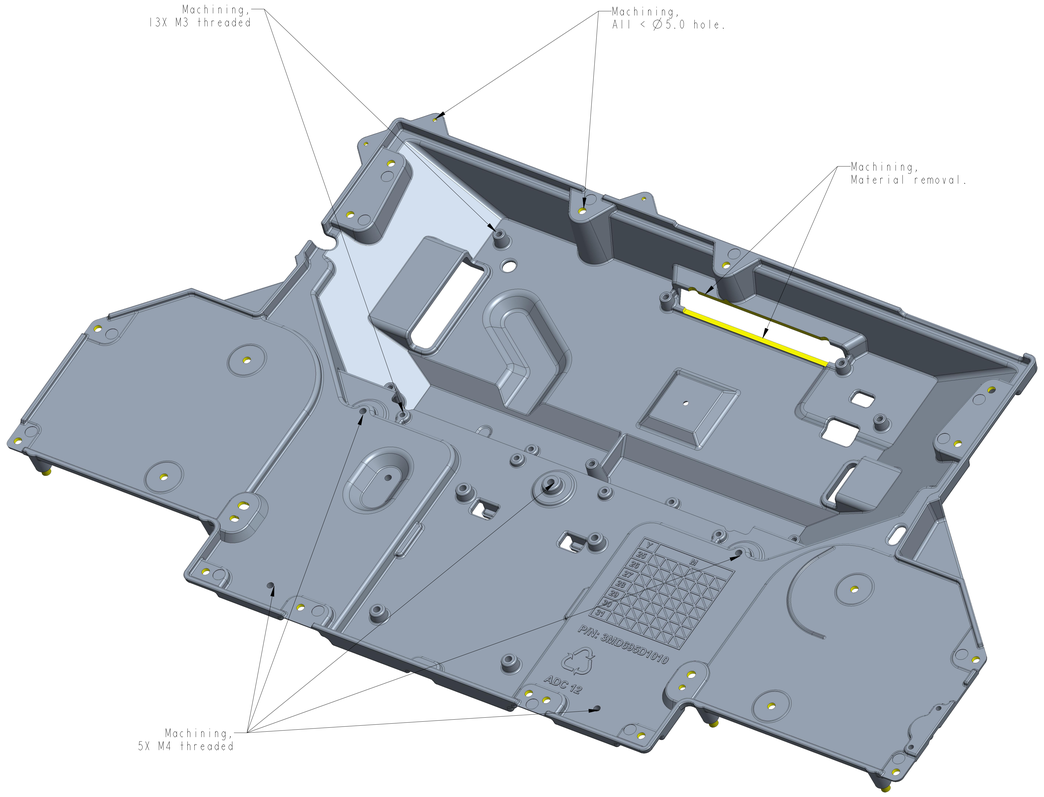

SCALE 1:1

Machining "Back Side"

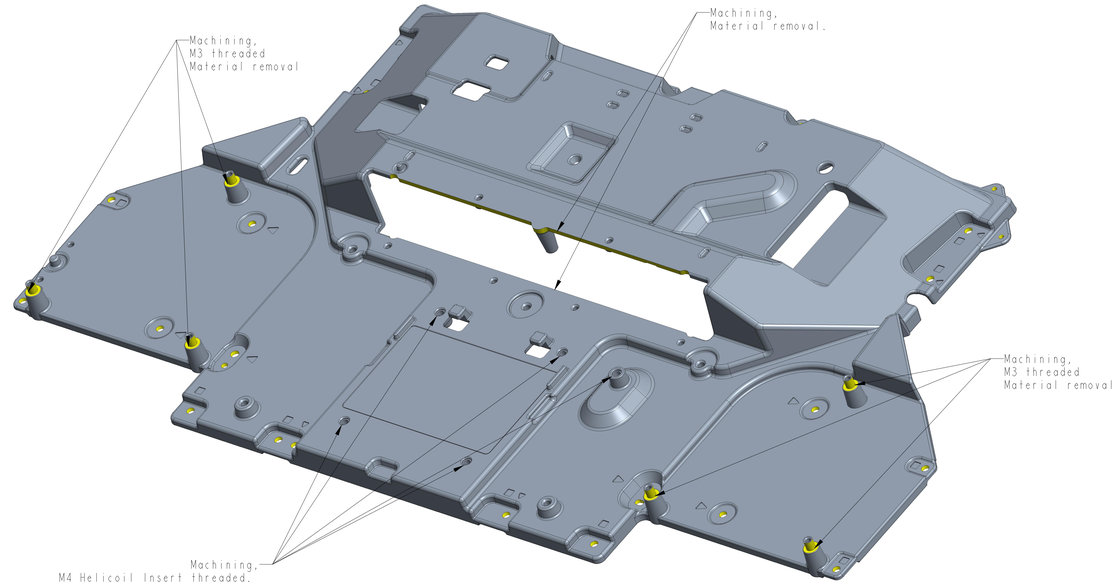

SCALE 1:1

DNA Laboratories. Ltd.

PART NAME: MAIN BRACKET					
PART NUMBER: 3MD695D1010		MFG. PART NUMBER: NA			
MODEL NAME: VM15	SIZE: A0	SCALE: 2:3	SHEET: 3 OF 3		REV: 1

THIS DOCUMENT IS SUPPLIED IN CONFIDENCE - NO REPRODUCTION OF THIS DOCUMENT IN PART OR IN WHOLE OR VERSION OF THE ITEMS SHOWN MAY BE MADE WITHOUT THE COPYRIGHT OWNERS WRITTEN PERMISSION.