

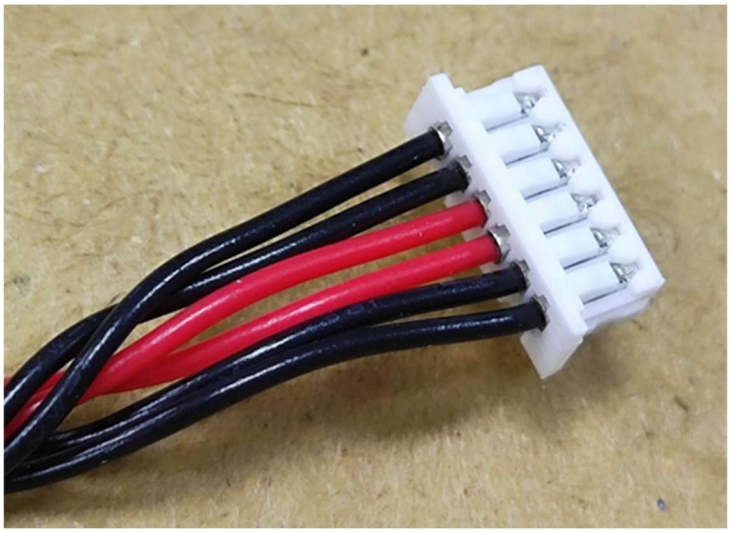

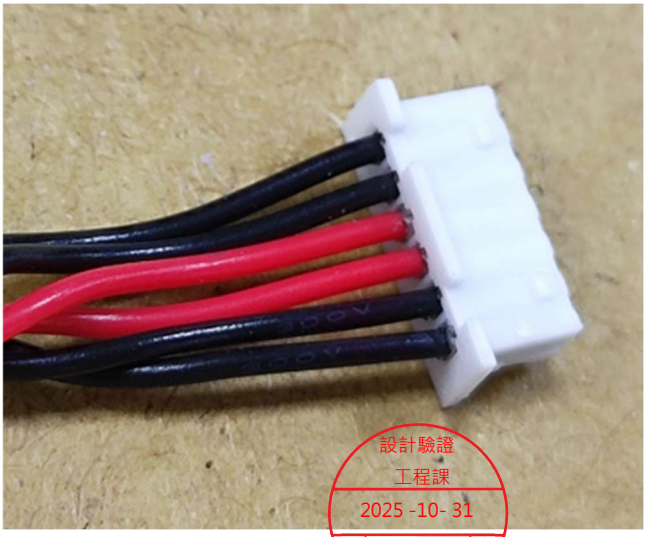

設計驗證
工程課
2025 -10- 31
發行
益華科技開發股份有限公司

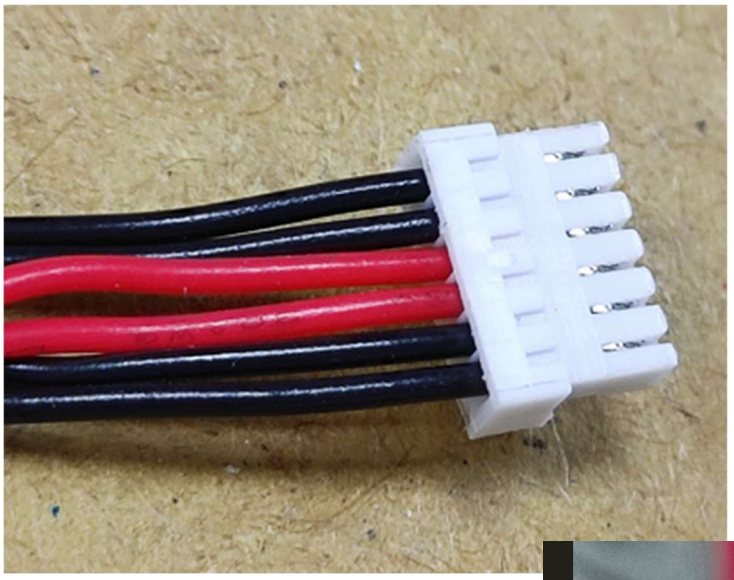



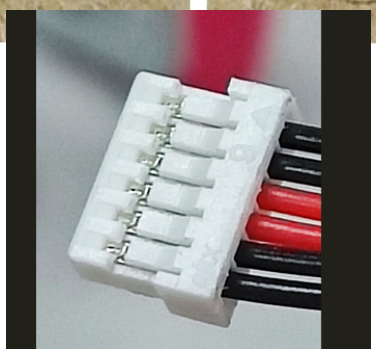

Xya 新亚 Electric Communication

# SPECIFICATION FOR APPROVAL

# 承認書

| | |
|---|---|
| 客户名称<br>Customer Name | 钰纬科技 |
| 产品描述<br>Description | WIRE*6 (CI1406S000A&1252HNO-6P,200mm)UL1061#30 |
| 客户料号<br>Customer P/N | 3KH00009714(K0100) |
| 机种<br>Model | |
| 新亚料号<br>Xya P/N | X25JGW-4759-P |
| 制作<br>Designed by | 彭权 |
| 审核<br>Checked by | 汪小龙 |
| 核准<br>Approved by | 孙玉宝 |

設計驗證
工程課
2025 -10- 31
發行
钰緯科技開發股份有限公司

| 客户确认<br>CUSTOMER SIGNATURE | | |
|---|---|---|
| 制作<br>Prepared By | 审核<br>Checked By | 核准<br>Approved By |
| | | |

请签字确认回签。
PLEASE RETURN TO US ONE COPY OF SPECIFICATION FOR APPROVAL WITH YOUR APPROVED SIGNATURES.

苏州新亚电通股份有限公司 SUZHOU XINYA ELECTRIC COMMUNICATION CO., LTD. 3205000117784

**苏州新亚电通股份有限公司**

SUZHOU XINYA ELECTRIC COMMUNICATION CO., LTD.

| 单重： 克 | HARNESS图号DRAWING NO. |
|---|---|
| 整绞： REF圈 | H4759F |

| 版本 REV. | 日 期 DATE | 变更单号 ECO NO. | 变更内容 DESCRIPTION | 制图 DRAWN |
|---|---|---|---|---|
| ⚠2 | 2025-07-24 | | 变更电线规格 | FWH |

红 磷

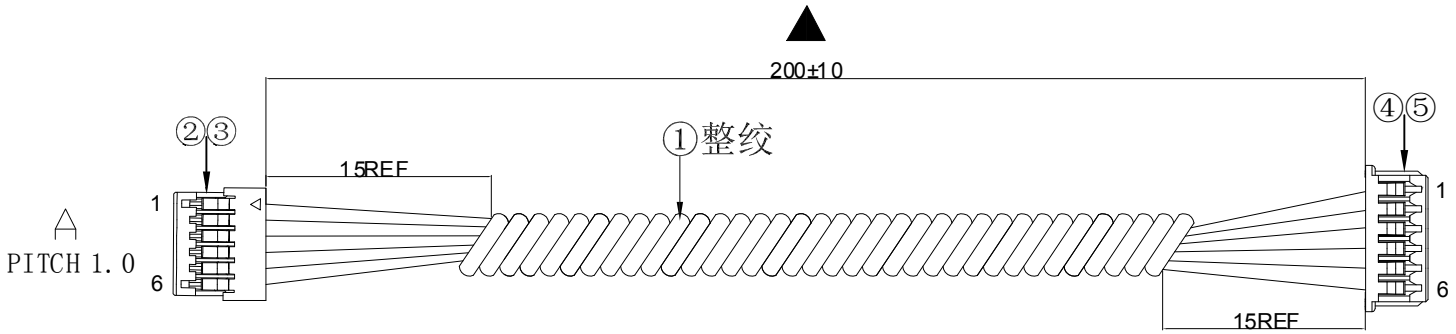


| | | | | | | |
|---|---|---|---|---|---|---|
| ⚠1 | | | | | | |
| 1 | UL1061 30#TS | 黑 | 218±1 | 1.5 | 1.5 | 1 |
| 2 | UL1061 30#TS | 黑 | 218±1 | 1.5 | 1.5 | 2 |
| 3 | UL1061 30#TS | 红 | 218±1 | 1.5 | 1.5 | 3 |
| 4 | UL1061 30#TS | 红 | 218±1 | 1.5 | 1.5 | 4 |
| 5 | UL1061 30#TS | 黑 | 218±1 | 1.5 | 1.5 | 5 |
| 6 | UL1061 30#TS | 黑 | 218±1 | 1.5 | 1.5 | 6 |
| A | 线 规 SPEC. | 颜色 COLOR | 开线 CUT | A | B | B |
| | | | | 剥头 PEEL | | |

設計驗證 工程課 2025-10-31 發行 (蘇州新亚电通股份有限公司)

打▲的为重点检测尺寸

| 序号 NO. | 料 号 PART NO. | 数 量 Q'TY | 材 料 MATERIAL | 厂商 VENDOR |
|---|---|---|---|---|
| ⑤ | D1251-06P-*-HF | 1 | HOUSING:D1251-06P-X-HF/TU1252HN0-6P | XINYA/TYU |
| ④ | D1251-TOP.VA-* | 6 | TERMINAL:D1251-TOP.VA-X/TU1252TPO-A | XINYA/TYU |
| ③ | D1004-06P-*-HF | 1 | HOUSING:D1004-06P-X-HF/CI1406S000A-NH | XINYA/CviLUX |
| ② | D1004-TOP.VA-* | 6 | TERMINAL:D1004-TOP.VA-X/CI14T011PEO | XINYA/CviLUX |
| ⚠① | 00S1061-30*0Z-* | 6 | WIRE:无DOP无红磷 UL1061 #30(7/0.10)OD=0.8 VW-1 | XINYA/HM |

| | | | | | | | | | | | |
|---|---|---|---|---|---|---|---|---|---|---|---|
| Xya 苏州新亚电通股份有限公司 SUZHOU XINYA ELECTRIC COMMUNICATION Co.,LTD. | 制 表 (DR.) | 校 对 (COL.) | 审 核 (CHK.) | 核 准 (APPD.) | 通用公差 GENERL TOLERANCE | | 料 号 PART NO. | X25JGW-4759-P | 客 户 CUSTOMER | 钰纬科技 | 版 本 REV. | 2 |
| | 范 2025-07-24 唯浩 | | | | X.±0.50 | X.°±3° | 客户料号 CUTM.NO. | 3KH00009714 (K0100) | 第1版 (OR.D.) | 2025.04.22 | 页 次 SHEET | 1/1 |
| | | | | | .X±0.30 | .X°±1° | 机种号 MODEL.NO. | _ | 比例：无 SCALE: FREE | | 单 位 UNITS | MM |

| 版本 REV. | 日 期 DATE | 变更单号 ECO NO. | 变更内容 DESCRIPTION | 制图 DRAWN |
|---|---|---|---|---|
| | | | | |

HARNESS图号DRAWING NO.

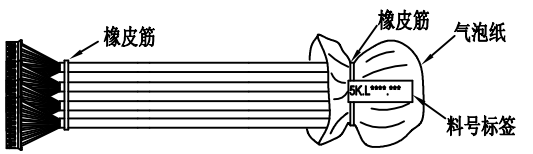


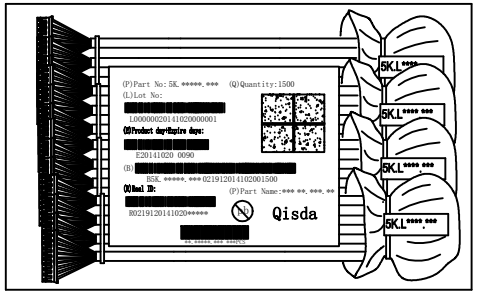


附图A：

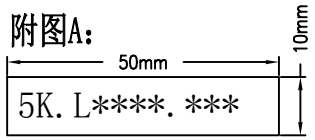


附图B：

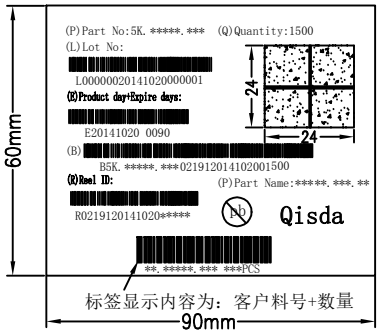


标签显示内容为：客户料号+数量

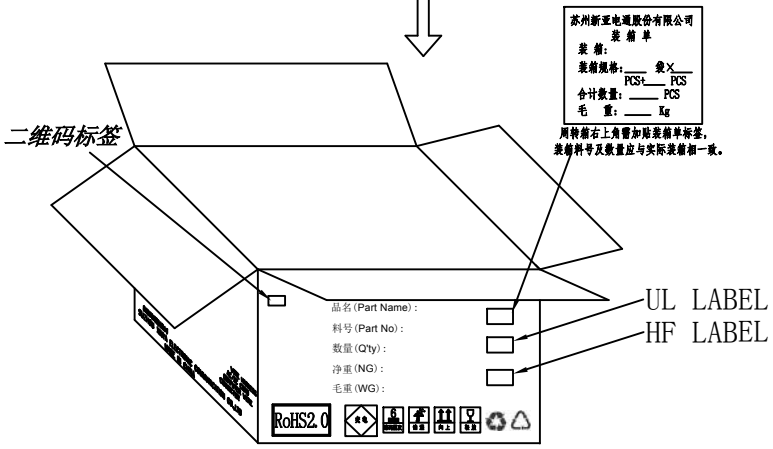


附图C：

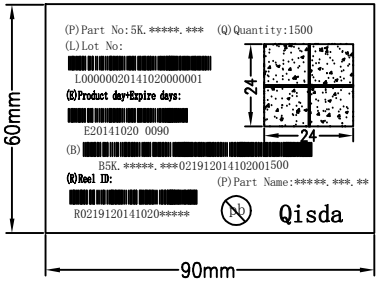


备注：

1 每***PCS用橡皮筋扎成一扎，加贴一料号标签(见附图A),有气泡袋包扎的料号标签贴在气泡袋上，无气泡袋包扎的料号标签贴在线体上。

2 如遇过板端子、磁环等易损构件，每扎包装时须加气泡纸。

3 将每扎产品依次装入一PE袋,PE袋上需加贴二维码标签(见附图B)。

4 箱体外必须贴上UL标签及二维码标签(见附图C)**(无卤料需加贴“HF”标签)**

5 外箱单重的信息，需要填写在对应位置上，书写工整，不可随意书写。

6 箱子不得有破损，用胶带密封好，且注意不可重压。。

| | 制 表 (DR.) | 校 对 (COL.) | 审 核 (CHK.) | 核 准 (APPD.) | 通用公差 GENERL TOLERANCE | | 料 号 PART NO. | LCD GP料包装图 | 客 户 CUSTOMER | 佳世达 | 版 本 REV. | 1 |
|---|---|---|---|---|---|---|---|---|---|---|---|---|
| 苏州新亚电通股份有限公司 SUZHOU XINYA ELECTRIC COMMUNICATION Co.,LTD. | 范 2022-10-11 唯浩 | | | | X.±0.50 | X.°±3° | 客户料号 CUTM. NO. | – | 第1版 (OR.D.) | 2022.10.11 | 页 次 SHEET | 1/1 |
| | | | | | .X±0.30 | .X°±1° | 机种号 MODEL. NO. | – | 比例：无 SCALE: FREE | | 单 位 UNITS | MM |

# 苏州新亚电通股份有限公司

| 类　　别 | 料号编码原则<br>[线束成品料号编列] | 文件编号 | X001 |
|---|---|---|---|
| 工作指导书 | | 机密等级 | ■ 机密 □ 一般 |
| | | 版　　次 | A |
| | | 页　　次 | 1 / 2 |

线束成品料号编列：

S □□ □ □□-□□□□-□□-□□-□□

1 2 3 4 5 6 7 8

1、销售模式码：S=外销(保税)　X=内销(非保税)

2、年度码：8 代表 2008 年开发的料件，16 代表 2016 年开发的料件

3、产品类别码：

| | | | | |
|---|---|---|---|---|
| A | 镀锡FFC(扁铜线) | | B | 镀金FFC(扁铜线) |
| C | 咪头 | | E | 机外线(注塑成型类) |
| G | 隔离线 | | H | 一端HOUSING，一端沾锡 |
| I | IDC类 | | J | 两端HOUSING类单线 |
| K | 镀锡FFC(圆铜线) | | L | Wire Harness LVDS |
| M | 一端HOUSING，一端电源插头 | | N | NB CABLE |
| P | FPC | | Q | 原材料类 |
| R | FFC G-TYPE | | S | MINI SAS |
| T | 外接端子类 | | V | Wire Harness排线类 |
| W | Only Wire | | Y | Wire Harness刺破式类 |

4、客户别码：详见客户识别码索引表

5、流水码：从 0001~9999，一个循环结束后，再从 0001~9999

6、特殊料件识别码：

***无特殊要求时为空***

产品类别码(Table 2)

| | | | | |
|---|---|---|---|---|
| C | FFC小线冲型类 | | CL | FFC LVDS冲型类 |
| CV | FFC冲型+HOT-bar类 | | CF | FFC反折Pin冲型类 |
| F | FFC反折Pin类 | | L | FFC LVDS类(无冲型、HOT-bar) |
| LF | FFC LVDS反折Pin类 | | VF | FFC HOT-bar反折Pin类 |
| V | HOT-bar类 | | VL | FFC LVDS(HOT-bar类) |
| TSD | 复杂的汽车线(2个以上组件) | | TSE | 简单的汽车线(2个组件) |
| ASD | 复杂的组合线(2个以上组件，且非汽车线) | | ASE | 简单的组合线(2个组件，且非汽车线) |
| CD | 低单价线束 | | | |

7、环保料件识别码：

| | | | | |
|---|---|---|---|---|
| HF | 无卤类 | | Z | 无DOP类 |
| HZ | 无卤、无DOP类 | | P | 无红磷类 |
| HP | 无卤、无红磷类 | | | |

8、产品交货地点码：

正常此码省略

当同一个料号出不同产地时，增加产地后缀码，详细见客户识别码索引表

**除先锋产品出海外，后缀增加“-E”以示区分**

**先锋产品出海外，后缀增加“-X”，切记，不是“-*”**

若产品交往海外的不同地点国家，在”-E”和 ”-X”前增加 2 码地点码，

如” –HL-E”(出海外，交往荷兰)、” –BL-E”(出海外，交往波兰)

详见客户识别码索引表

# 苏州新亚电通股份有限公司

| PRODUCTION NAME：WIRE HARNESS | | | |
|---|---|---|---|
| Designed：Jodie | APVD：Aviv | Edition：D | File Name：ML1001 |
| | | DATE：2019.07.01 | Page：1/8 |

## 1. SCOPE 应用范围

This product specification contains the test method, the general performance and requirement for Flexible Flat Cable system.

## 2. REQUIREMENTS 必要条件

### 2.1. DESIGN AND CONSTRUCTION 设计规范

Product shall be of the design, construction and physical dimensions specified on the applicable product drawing

### 2.2. MATERIALS 材质

A、Housing：见零件规格书

B、Terminal：见零件规格书

C、Wire：见零件规格书

### 2.3. Wire RATINGS 线材规格

A、见零件规格书

## 3.Standard of Confidence Test 信赖性测试

3.1 TEST ENVIRONMENT 测试条件

A. Environment Temperature: 15~35℃

B. Humidity: 45~75%

3.2.TEST REQUIREMENTS AND PROCEDURES SUMMARY

| PRODUCTION NAME：WIRE HARNESS | | | |
|---|---|---|---|
| Designed：Jodie | APVD：Aviv | Edition：D | File Name：ML1001 |
| | | DATE：2019.07.01 | Page：2/8 |

| Items<br>测试项目 | | Test conditions<br>测试条件 | Criteria<br>判定标准 |
|---|---|---|---|
| 1 | Appearance inspection<br>外观检查 | 1、without mechanical injure、deformation、denude<br>2、Connection terminal should be shining， no oxidization and scoring | PASS |
| **ELECTRICAL** 电气特性 | | | |
| 1 | Contact Resistance<br>接触阻抗 | 20mV/10mA | Less than 20mΩ |
| 2 | Insulation Resistance<br>绝缘阻抗 | DC500V /1min | More than 100MΩ |
| 3 | Dielectric Withstanding Voltage<br>耐电压 | AC250V/0.5mA 1min | No breakdown |
| 4 | Continuity Test<br>导通测试 | Continuity performance should be good， without short、wrong order | No Withoutshort wrong order |
| **MECHANICAL** 机械特性 | | | |
| 5 | Terminal crimp tensile strength<br>抗张强度 | Terminal crimp tensile strength (Excluding insulation of wire)： | Figure 1 |
| 6 | Pull-out Test<br>插拔测试 | With the corresponding conn is inserted in the 25± 3mm/min | Figure 2 |
| 7 | Mechanical life<br>机械寿命 | Insertion and withdrawal 50 times with speed of 100 times/ hour | More than 50 cycle |
| 8 | Plating Thickness Test<br>膜厚测试 | Coating Thickness Tester | NA |

| ENVIRONMENTAL 环境特性 | | | |
|---|---|---|---|
| 9 | Heat Resistance<br>耐高温 | At the temperature of high temperature test box 85±2℃ is placed in a 96±1H，1H recovery room temperature after detection | PASS |
| 10 | Low temperature resistance<br>耐低温性 | At the temperature of high temperature test box -25±2℃ is placed in a 96±1H，1H recovery room temperature after detection | PASS |
| 11 | Heat Cycle Test<br>冷热循环 | The 1 cycles：-25℃~+25℃~+85℃~+25℃，5 consecutive cycles，1H recovery room temperature after detection | PASS |
| 12 | Humidity<br>恒温恒湿 | Test temperature of 40 degrees, humidity 90～95%RH，the time of 96±1H，1H recovery room temperature after detection | PASS |
| 13 | Vibration Test<br>振动测试 | Frequency：50HZ，Swing：1.52mm，each of X, Y, Z-axis directions for 12cycles，and every30 mins | The external appearance have no injury，onnection part has no loose or break |
| 14 | Salt Spray<br>盐雾试验 | Temperature：35 ±2℃<br>Salt solution：5 ±1%<br>Duration：16±1h<br>(After the test，salt deposit shall be removed in running water)<br>符合国标 GB6461-2002 7 级判断标准 | PASS |
| 15 | Characteristics<br>特性阻抗 | The type of the equipment：DCA-J 86100C<br>Test standard：NA | NA |

**4. Direction For Use** 产品使用说明

4.1 保质期：包装好的产品在 20±10℃、:70%RH 湿度以下的环境中，可以储存 6 个月

4.2 该产品只适用开发段所对应机种/机型使用需求，不可以作为其它用途使用。若客户端延用到其它机种/机型，则需要向新亚确认是否能继续延用，若因没有通知新亚评估直接使用到其它机种/机型所造成的异常损失，苏州新亚电通有限公司不承担相应的异常责任

4.3 该产品符合制造国(中国)的法律法规要求，同时符合客户在开发段提供的交换目的国法律法规要求，若客户更改交换目的国，需要书面通知新亚，新亚评估是否符合对应国的法律法规要求，若客户在开发段不给予交换目的国的信息，则默认符合制造国的法律法规要求即可，若客户变更交换目的国没有书面通知苏州新亚，苏州新亚电通有限公司不承担因此造成的异常责任

Figure 1

| 导体规格 | 导体截面积 | 抗张强度判定标准 |
|---|---|---|
| 34# | 0.02㎜² | ＞0.3Kg |
| 32# | 0.03㎜² | ＞0.5Kg |
| 30# | 0.05㎜² | ＞1.2Kg |
| 28# | 0.08㎜² | ＞1.5Kg |
| 26# | 0.13㎜² | ＞2.5Kg |
| 24# | 0.21㎜² | ＞4.0Kg |
| 22# | 0.33㎜² | ＞5.0Kg |
| 20# | 0.5～0.55㎜² | ＞7.0Kg |
| 18# | 0.82～1.0㎜² | ＞10.0Kg |
| 16# | 1.3～1.5㎜² | ＞15.0Kg |
| 14# | 2.0～2.5㎜² | ＞17.0Kg |
| 12# | 3.3～4.0㎜² | ＞22.0Kg |
| 10# | 5.3～6.0㎜² | ＞33.0Kg |
| 8# | 8.3～9.0㎜² | ＞40.0Kg |
| 6# | 13.3～14.0㎜² | ＞44.5Kg |
| 4# | 21.1～21.5㎜² | ＞62.3Kg |
| 3# | 26.6～26.8㎜² | ＞71.2Kg |
| 2# | 33.6～33.8㎜² | ＞80.1Kg |
| 1# | 42.4～42.7㎜² | ＞89.0Kg |

Figure 2

| **Items 测试项目** | **Test conditions 测试条件** | **Criteria 判定标准** |
|---|---|---|
| Insertion force 插入力 | With the corresponding conn is inserted in the 25±3mm/min | A端≤3.0Kg<br>B端≤3.0Kg |
| Pullout force 拔出力 | | 0.5Kg≤A端≤2.0Kg<br>0.5Kg≤B端≤2.0Kg |

| PRODUCTION NAME：WIRE HARNESS | | | |
|---|---|---|---|
| Designed：Jodie | APVD：Aviv | Edition：D | File Name：ML1001 |
| | | DATE：2019.07.01 | Page：6/8 |

# 线束使用注意事项

## Wire Harness using Notes and Operation manual

由于线束产品的特殊性，在使用时，不正确的插入和拔出会使其端子易变形甚至可以导致产品功能失效，所以，线束产品在使用上要特别注意以下事项：

Due to the particularity of harness products, when in the using, Incorrect insertion and Pull out of the terminal is easy to deformation , even can to be lead to product function failure, so, Harness products in use should pay special attention to the following matters:

**◆普通 LCD 线束/General LCD harness ：**

1，在连接的 wafer 上插拔时，要水平向内插入。插入 housing 时需要捏住 housing 的底部或者距离线缆的 1-2mm 处水平的插入；不得向上、向下或者倾斜插拔，这样会使 housing PIN 口变形和端子功能区变形、扩孔。

When connecting to the wafer insertion and Pull out, need to Horizontal into insertion. When Insert housing you need to hold the bottom of the housing or distance in the cable 1-2mm location Horizontal into insertion, don’ t take up、take down or Tilt the insertion and Pull out, This will make housing PIN mouth deformation and terminal PIN mouth functional area deformation, reaming.

2，拔出 housing 时需要捏住 housing 的底部或者线缆的 1-2mm 处水平、均匀的拔出。不得使用蛮力拉拔、拉扯线缆使之拔出，这样会造成端子不定位或者线缆断裂等功能不良。

When Pull out the housing need to hold the bottom of the housing or distance in the cable 1-2mm location Horizontal Pull out, the Pull out power need Horizontal and uniform . do not use brute force drawing, pulling cable , this will cause the terminal is not positioning or cable breakage and other undesirable function.

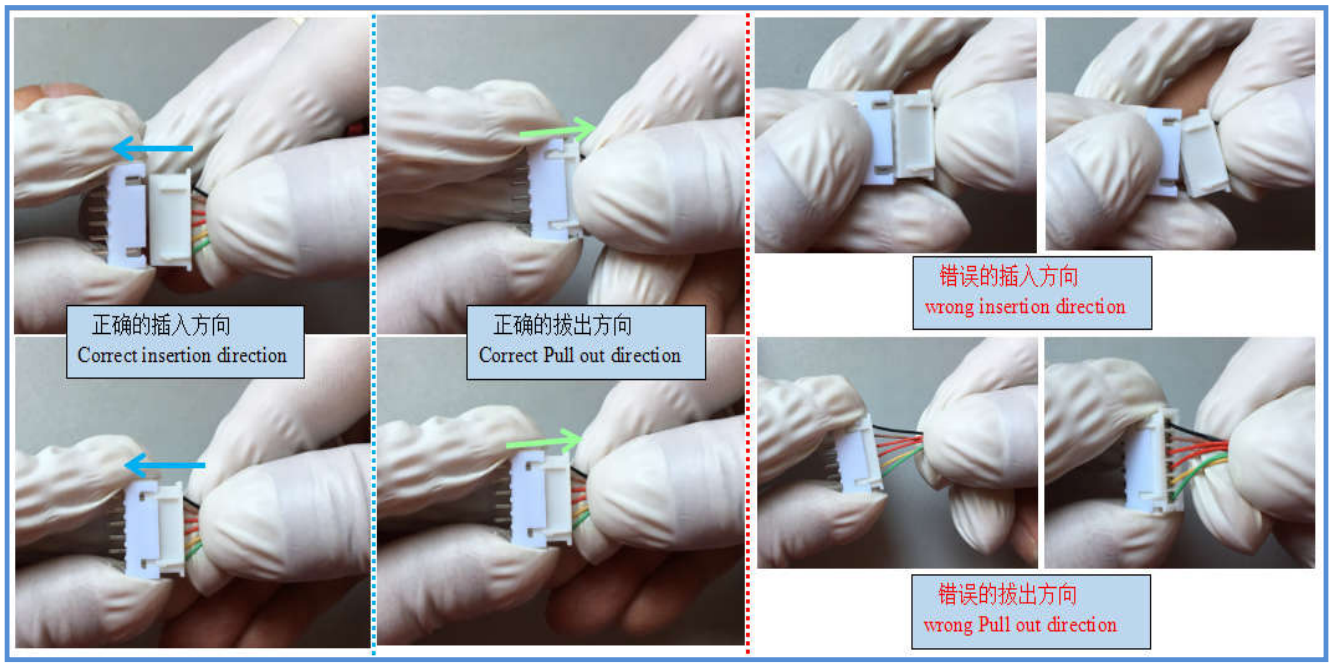

◆LVDS 线束/LVDS harness：

1，在连接的 wafer 上插拔时，要水平向内插入。插入 housing 时需要捏住 housing 的底部或者距离线缆的 1-2mm 处水平的插入或按压 housing 两侧的铁弹片插入；不得向上、向下或者倾斜插拔，这样会使 housing 塑胶体断裂或者端子的金手指变形、断 PIN。

When connecting to the wafer insertion and Pull out，need to Horizontal into insertion. When Insert housing you need to hold the bottom of the housing or distance in the cable 1-2mm location Horizontal into insertion or Press housing on both sides of the iron shrapnel，don’t take up、take down or Tilt the insertion and Pull out，this will break the housing plastic part or terminal finger deformation, broken PIN .

2，拔出 housing 时需要按压 housing 两侧的铁弹片处水平、均匀的拔出。不得使用蛮力拉拔、拉扯线缆受硬力使之拔出，这样会造成端子不定位或者线缆断裂等功能不良。

When Pull out the housing need to Press housing on both sides of the iron shrapnel ,the Pull out power need Horizontal and uniform .do not use brute force drawing, pulling cable ,this will cause the terminal is not positioning or cable breakage and other undesirable function.

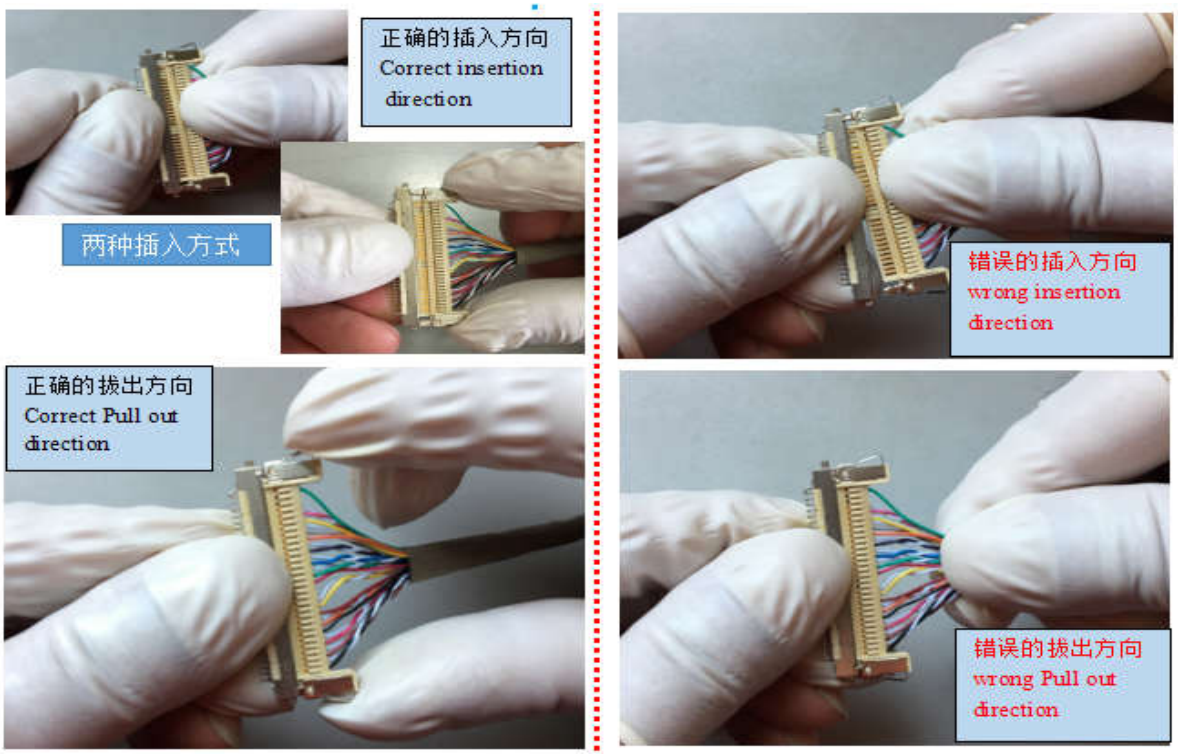


NOTE(S)：

1，要避开同其它物体的某些物理物体的直接接触。
To avoid direct contact with certain physical objects of other objects.

2，在高温高湿的场合下连续使用时，事先请采用实装的评价(评估)。
In the high temperature and high humidity occasions for continuous use, Please evaluate the

implementation (assessment).



3，在使用过程中，如不慎跌落地上或者其它可能使其粘上异物的情况下，必须将导体露出处的脏污清除干净后才能使用（清除异物时要顺着导体的方向，向外清除）。

In the course of using, Such as accidentally fell on the ground Or other conditions that may cause it to stick to a

foreign body, Must be to remove dirt exposed conductor clean after to used (removal of foreign matter to follow the direction of the conductor, outward clearance).

**XINYA ELECTRONIC CO.,LTD**
**TEL:86-0577-62866888 FAX:86-0577-62865999**
**http://www.xinya-cn.com**

| 核准 APPROVED | 审核 CHECKED | 制作 DRAWING |
|---|---|---|
| 石留建 | 周汉章 | 潘文欢 |

# *规格承认书 Product Specifications*

| 规格SPECIFICATION: | | UL 1061 30#TS～16#TS | | | | | | | |
|---|---|---|---|---|---|---|---|---|---|
| 项目ITEM | | 规 格 SPECIFICATION | | | | | | | |
| 导体 CONDUCTOR | 线规AWG | 30 | 28 | 26 | 24 | 22 | 20 | 18 | 16 |
| | 材质MATERIAL | 镀锡铜 TINNED COPPER | | | | | | | |
| | 尺寸COND.SIZE | 7/0.100± 0.008 | 7/0.127 ±0.008 | 7/0.160 ± 0.009 | 7/0.200 ± 0.009 | 7/0.254 ±0.009 | 7/0.320 ±0.010 | 16/0.254 ±0.009 | 26/0.254 ±0.009 |
| 绝缘 INSULATION | 标称厚度 Nominal Thickness | 0.23㎜ | | | | | | | |
| | 最小厚度 Min. Thickness | 0.18㎜ | | | | | | | |
| | 材质MATERIAL | 半硬质聚氯乙烯 SRPVC（无DOP NO DOP) | | | | | | | |
| | OD外径 | 0.80±0.05 | 0.90±0.05 | 1.00±0.05 | 1.10±0.05 | 1.30±0.05 | 1.50±0.10 | 1.80±0.10 | 2.10±0.10 |
| | 颜色COLOUR | 任意Optional | | | | | | | |
| Conductor Resistance: Max(Ω/Km,20℃) | | 381 | 239 | 150 | 94.2 | 59.4 | 36.7 | 23.2 | 14.6 |
| 印 字 MARKING | | AWM 1061 E170689 VW-1 80℃ 300V xxAWG XINYA CSA AWM I A LL109915 FT1 80℃ 300V xxAWG -F- LM | | | | | | | |

| 电气性能ELECTRICAL CHARACTERISTICS | 物理性能PHYSICAL CHARACTERISTICS |
|---|---|
| 1. 额定值Rating : 温度TEMP 80℃ ; 电压VOLTAGE 300V<br>2.浸水耐压Dielectric-Withstand Test:2000V<br>3.火花电压Spark Test:3000V | 1.抗张强度Tensile Strength: 2.11kgf/mm$^2$<br>2. 伸长率Elongation: Unaged: 100% min<br>3. 热冲击Heat shock test: 不开裂NO CRACKING<br>4. 冷弯Cold bend test: 不开裂NO CRACKING<br>5. 加热变形Deformation test: MAX 50%<br>6. 燃烧测试Flame test: PASS VW-1 |

剖面图Cross - Sectional View :

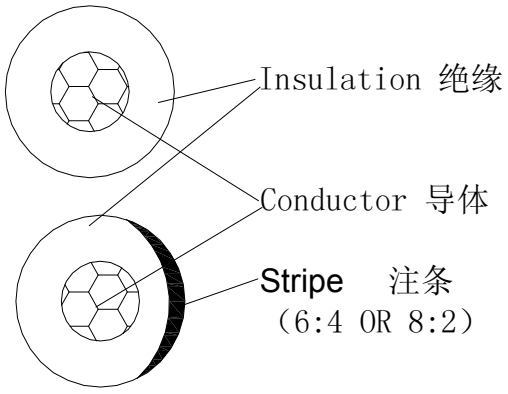


备 注 REMARK

| 图号 PART NO. | SP1112028 | 客户承认 APPROVED BY | |
|---|---|---|---|

# XINYA ELECTRONIC CO.,LTD

# 新亚电子有限公司

## MATERIAL CERTIFICATE（Cu）

## 材料成份分析表（铜）

| COMPONENT:<br>成分 | RATIO（%）<br>含量 |
|---|---|
| COPPER<br>铜 | 98.5 |
| BISMUTH<br>铋 | 0.0002 |
| ANTIMONY<br>锑 | 0.0004 |
| ARSENIC<br>砷 | 0.0005 |
| IRON<br>铁 | 0.001 |
| LEAD<br>铅 | 0.0005 |
| TIN<br>锡 | 1.3 |
| SULFUR<br>硫 | 0.0015 |
| OXYGEN<br>氧 | 0.00 1 |
| SELENIUM<br>硒 | 0.0002 |
| ARGENTUM<br>银 | 0. 0025 |
| TE<br>碲 | 0. 0002 |

Pb≤100ppm(According to EPA3050B),Cd≤5ppm(According EN1122:2001)

根据 EN1122 和 EPA3050B 参照 SOSY 标准、铅≤100ppm　隔≤5ppm

新亚电子有限公司

品保部

2010.4.22

# 新 亚 电 子 有 限 公 司

# XINYA ELECTRONIC CO.,LTD.

# PVC 材质证明

（MATERIAL CERTIFICATION OF PLASTICIZED PVC COMPOUNDS）

| MATERIAL 材料 | PERCENT 百分比 |
|---|---|
| PVC RESIN<br>PVC 树脂 | 50% |
| FILLER(CaCO3)<br>填充剂(CaCO3) | 15% |
| PLASTICIZER(DPHP/TOTM)<br>增塑剂(DPHP/TOTM) | 28% |
| STABILIZER(Ca-Zn COMPOUNDS)<br>稳定剂（Ca-Zn 化合物） | 4% |
| LUBRICANT(STERIC ACID)<br>润滑剂（硬脂酸） | 0.50% |
| FIREPROOFENT（$Sb_2O_3$）<br>阻燃剂（$Sb_2O_3$） | 2% |
| OTHER<br>其它 | 0.50% |

新亚电子有限公司

品保部

2017-10-11

UL Product iQ®

# Appliance Wiring Material - Component

**COMPANY**

XINYA ELECTRONIC CO LTD
No.1, Panzhuyang Road
Laizhai Intelligent Industrial Park, Beibaixiang Town
Yueqing, Zhejiang Sheng 325603 China

E170689

**Table of Recognized Styles**

| | | | | | | | |
|---|---|---|---|---|---|---|---|
| **Single-conductor, thermoplastic insulation** | | | | | | | |
| 1007 | 1275 | 1430 | 1631 | 1792 | 10125 | 10362 | 10974 |
| 1010 | 1283 | 1431 | 1637 | 1867 | 10183 | 10368 | 11027 |
| 1015 | 1316 | 1452 | 1640 | 1887 | 10231 | 10369 | 11028 |
| 1028 | 1330 | 1500 | 1671 | 1901 | 10241 | 10466 | 11079 |
| 1032 | 1331 | 1517 | 1672 | 10002 | 10267 | 10501 | 11193 |
| 1056 | 1332 | 1533 | 1674 | 10059 | 10269 | 10584 | 11303 |
| 1061 | 1333 | 1569 | 1685 | 10064 | 10272 | 10588 | 11304 |
| 1095 | 1346 | 1571 | 1691 | 10070 | 10279 | 10602 | 11469 |
| 1107 | 1347 | 1589 | 1726 | 10071 | 10297 | 10800 | 11625 |
| 1108 | 1354 | 1617 | 1728 | 10086 | 10316 | 10913 | 11627 |
| 1185 | 1365 | 1618 | 1745 | 10097 | 10335 | 10918 | 11722 |
| **Multiple-conductor, thermoplastic insulation** | | | | | | | |
| 2095 | 2517 | 2587 | 2845 | 20167 | 20549 | 21099 | 21458 |
| 2096 | 2547 | 2651 | 2851 | 20251 | 20574 | 21100 | 21515 |
| 2103 | 2551 | 2661 | 2854 | 20276 | 20626 | 21143 | 21520 |
| 2405 | 2552 | 2689 | 2877 | 20288 | 20696 | 21307 | 21869 |
| 2408 | 2555 | 2725 | 2881 | 20295 | 20744 | 21308 | 22224 |
| 2464 | 2556 | 2733 | 2919 | 20327 | 20798 | 21311 | 22258 |
| 2468 | 2562 | 2734 | 2951 | 20328 | 20855 | 21445 | 22386 |
| 2474 | 2570 | 2789 | 2960 | 20346 | 20937 | 21451 | 22431 |
| 2476 | 2571 | 2791 | 2990 | 20379 | 21016 | 21452 | |

| | | | | | | | |
|---|---|---|---|---|---|---|---|
| 2501 | 2586 | 2835 | 20080 | 20464 | 21088 | 21455 | |
| **Single-conductor, thermoset insulation** | | | | | | | |
| 3173 | 3239 | 3272 | 3346 | 3364 | 3436 | 3485 | 3817 |
| 3195 | 3265 | 3289 | 3347 | 3385 | 3443 | 3567 | 3917 |
| 3196 | 3266 | 3302 | 3348 | 3386 | 3478 | 3619 | 3918 |
| 3199 | 3271 | 3321 | 3363 | 3398 | 3481 | 3737 | |
| **Multiple-conductor, thermoset insulation** | | | | | | | |
| 4411 | 4413 | 4478 | 4523 | | | | |

Marking: Company name, voltage rating, temperature rating, conductor size, conductor material if other than copper,.

Last Updated on 2023-06-20

The appearance of a company's name or product in this database does not in itself assure that products so identified have been manufactured under UL Solutions' Follow - Up Service. Only those products bearing the UL Mark should be considered to be Certified and covered under UL Solutions' Follow - Up Service. Always look for the Mark on the product.

UL Solutions permits the reproduction of the material contained in Product iQ subject to the following conditions: 1. The Guide Information, Assemblies, Constructions, Designs, Systems, and/or Certifications (files) must be presented in their entirety and in a non-misleading manner, without any manipulation of the data (or drawings). 2. The statement "Reprinted from Product iQ with permission from UL Solutions" must appear adjacent to the extracted material. In addition, the reprinted material must include a copyright notice in the following format: "©2024 UL LLC."

KUNSHAN XINGHONGMENG ELECTRONIC CO.，LTD
TEL:0512-50191998 FAX:0512-50191996
http://www.szshongmeng.cn

| 核准 APPROVED | 审核 CHECKED | 制作 DRAWING |
|---|---|---|
| STONE SHI | ADAM | NICOLE |

# 规格承认书 Product Specifications

REV:1.0

| 规格SPECIFICATION: | | UL 1061 30#TS～16#TS | | | | | | | |
|---|---|---|---|---|---|---|---|---|---|
| 项目ITEM | | 规 格 SPECIFICATION | | | | | | | |
| 导体 CONDUCTOR | 线规AWG | 30 | 28 | 26 | 24 | 22 | 20 | 18 | 16 |
| | 材质MATERIAL | 镀锡铜 TINNED COPPER | | | | | | | |
| | 尺寸COND.SIZE | 7/0.100±0.008 | 7/0.127±0.008 | 7/0.16±0.009 | 7/0.20±0.009 | 7/0.254±0.009 | 7/0.32±0.01 | 16/0.254±0.009 | 26/0.254±0.009 |
| 绝缘 INSULATION | 平均厚度 Average Thickness | 0.23㎜ | | | | | | | |
| | 最小厚度 Min. Thickness | 0.18㎜ | | | | | | | |
| | 材质MATERIAL | 半硬质聚氯乙烯 SRPVC | | | | | | | |
| | OD外径(MM) | 0.80±0.05 | 0.90±0.05 | 1.00±0.05 | 1.10±0.05 | 1.30±0.05 | 1.50±0.10 | 1.80±0.10 | 2.10±0.10 |
| | 颜色COLOUR | 任意Optional | | | | | | | |
| Conductor Resistance: Max(Ω/Km,20℃) | | 381 | 239 | 150 | 94.2 | 59.4 | 36.7 | 23.2 | 14.6 |
| 印 字 MARKING | | AWM 1061 E315421 VW-I 80℃ 300V XXAWG HONGMENG AWM I A FTI 80℃ 300V XXAWG LM | | | | | | | |

| 电气性能ELECTRICAL CHARACTERISTICS | 物理性能PHYSICAL CHARACTERISTICS |
|---|---|
| 1. 额定值Rating : 温度TEMP 80℃ ; 电压VOLTAGE 300V<br>2.浸水耐压Dielectric-Withstand Test:2000V<br>3.火花电压Spark Test:3000V | 1.抗张强度Tensile Strength: 2.11kgf/mm²<br>2. 伸长率Elongation: Unaged: 100% min<br>3. 热冲击Heat shock test: 不开裂NO CRACKING<br>4. 冷弯Cold bend test: 不开裂NO CRACKING<br>5. 加热变形Deformation test: MAX 50%<br>6. 燃烧测试Flame test: PASS VW-1 |

剖面图Cross - Sectional View :

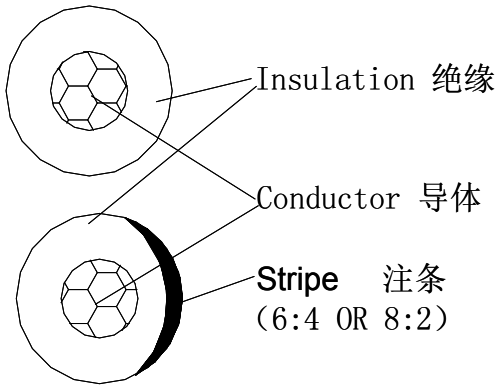


备 注 REMARK

| 图号 PART NO. | HM160503001 | 客户承认 APPROVED BY | |
|---|---|---|---|

# XINGHONGMENG ELECTRONIC CO.,LTD

# 兴鸿蒙电子有限公司

## MATERIAL CERTIFICATE（Cu）

## 材料成份分析表（铜）

| COMPONENT：<br>成分 | RATIO（%）<br>含量 |
|---|---|
| COPPER<br>铜 | 99.92 |
| BISMUTH<br>铋 | 0.0002 |
| STIBIUM<br>锑 | 0.0005 |
| ARSENIC<br>砷 | 0.0005 |
| IRON<br>铁 | 0.0005 |
| NICKEL<br>镍 | 0.0004 |
| LEAD<br>铅 | 0.0005 |
| TIN<br>锡 | 0.07 |
| SULFUR<br>硫 | 0.0001 |
| OXYGEN<br>氧 | 0.006 |
| ZINCUM<br>锌 | 0.0002 |
| PHOSPHOR<br>磷 | 0.0005 |
| ADMIUM<br>镉 | 0.00005 |

**Pb≤50ppm(According to EPA3050B),Cd≤5ppm(According EN1122:2001)**
**根据 EN1122 和 EPA3050B 规定铅≤90ppm 镉≤5ppm**

以上资料由本厂供方提供。其中镀锡线中锡的含量来自于铜丝的镀层，主要是防止铜丝氧化而特意加工为之，其它成份为自然界铜矿物质中自然含有的元素，无其它任何作用，也属非有意增加。

兴鸿蒙电子有限公司
工程部

**2015 – 1 - 5**

# XINGHONGMENG ELECTRONIC CO.,LTD

# 兴鸿蒙电子有限公司

## MATERIAL CERTIFICATE （PVC）
## 材料成份分析表（PVC）

| COMPONENT：<br>成分 | RATIO（%）<br>含量 |
|---|---|
| PVC RESIN<br>聚氯乙烯树脂 | 55 |
| PLASTICIZER<br>增塑剂 | 20 |
| FILLER(CCR&Caco3)<br>填充 | 16.8 |
| STABILIZER<br>稳定剂 | 5 |
| RETARDANT(Sb2o3)<br>阻燃剂 | 2.5 |
| LUBRICANT<br>润滑剂 | 0.4 |
| PIGMENT<br>色粉 | 0.3 |

**Pb≤50ppm(According to EPA3050B),Cd≤5ppm(According EN1122:2001)**
**根据 EN1122 和 EPA3050B 规定铅≤90ppm 镉≤5ppm**

以上资料由本厂供方提供。

兴鸿蒙电子有限公司

工程部

**2015 – 1 - 5**

UL Product iQ®

# AVLV2.E315421 - Appliance Wiring Material - Component

## Appliance Wiring Material - Component

**Kunshan Xinghongmeng Electronic Co Ltd** E315421
No. 1118 Jingban Rd
Shipai Industrial Area
Bacheng Town
Kunshan, Jiangsu 215312 China

**Table of Recognized Styles**

| | | | | | | | |
|---|---|---|---|---|---|---|---|
| **Single-conductor, thermoplastic insulation** | | | | | | | |
| 1007 | 1331 | 1569 | 1685 | 10002 | 10272 | 10602 | 11627 |
| 1015 | 1332 | 1571 | 1692 | 10064 | 10316 | 10708 | 11828 |
| 1017 | 1333 | 1589 | 1729 | 10070 | 10368 | 10800 | |
| 1028 | 1354 | 1617 | 1731 | 10086 | 10369 | 10954 | |
| 1032 | 1430 | 1618 | 1745 | 10097 | 10370 | 10958 | |
| 1061 | 1500 | 1637 | 1766 | 10231 | 10455 | 10974 | |
| 1095 | 1516 | 1640 | 1847 | 10248 | 10456 | 11136 | |
| 1185 | 1517 | 1672 | 1867 | 10267 | 10584 | 11530 | |
| 1330 | 1533 | 1674 | 1927 | 10269 | 10588 | 11602 | |
| **Multiple-conductor, thermoplastic insulation** | | | | | | | |
| 2095 | 2570 | 2725 | 2877 | 20267 | 20646 | 21016 | 21297 |
| 2464 | 2574 | 2733 | 2919 | 20276 | 20694 | 21064 | 21307 |
| 2468 | 2586 | 2789 | 2969 | 20327 | 20789 | 21088 | 21310 |
| 2517 | 2587 | 2835 | 2990 | 20375 | 20936 | 21089 | 21311 |
| 2547 | 2651 | 2844 | 20080 | 20376 | 20937 | 21099 | 21402 |
| 2555 | 2661 | 2851 | 20233 | 20379 | 20939 | 21139 | |
| 2562 | 2678 | 2854 | 20251 | 20549 | 20940 | 21143 | |
| **Single-conductor, thermoset insulation** | | | | | | | |
| 3173 | 3271 | 3302 | 3348 | 3385 | 3443 | 3619 | 3994 |
| 3265 | 3272 | 3321 | 3363 | 3386 | 3485 | 3781 | |
| 3266 | 3289 | 3347 | 3364 | 3398 | 3567 | 3817 | |

| **Multiple-conductor, thermoset insulation** | | | |
|---|---|---|---|
| 4384 | 4411 | 4413 | 4478 |

Marking: Company name, voltage rating, temperature rating, conductor size, conductor material if other than copper,.

Last Updated on 2022-04-06

The appearance of a company's name or product in this database does not in itself assure that products so identified have been manufactured under UL's Follow-Up Service. Only those products bearing the UL Mark should be considered to be Certified and covered under UL's Follow-Up Service. Always look for the Mark on the product.

UL permits the reproduction of the material contained in the Online Certification Directory subject to the following conditions: 1. The Guide Information, Assemblies, Constructions, Designs, Systems, and/or Certifications (files) must be presented in their entirety and in a non-misleading manner, without any manipulation of the data (or drawings). 2. The statement "Reprinted from the Online Certifications Directory with permission from UL" must appear adjacent to the extracted material. In addition, the reprinted material must include a copyright notice in the following format: "© 2022 UL LLC"

端子规格图号DRAWING NO.
D1004TOP001S

| 版本 REV. | 日期 DATE | DCN NO. | 变更内容 DESCRIPTION | 制图 DRAWN |
|---|---|---|---|---|
| C | 2015.06.19 | | 增加标注说明 | Ring. li |

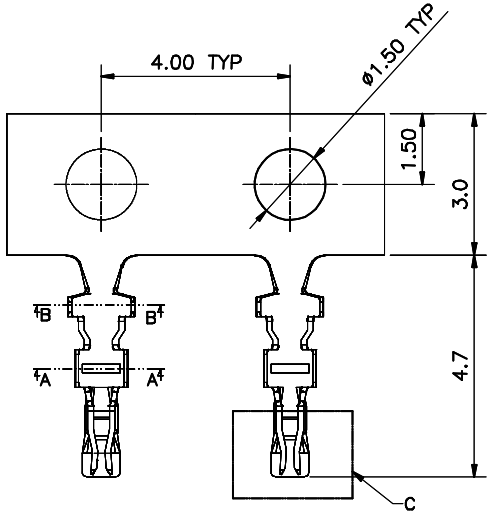


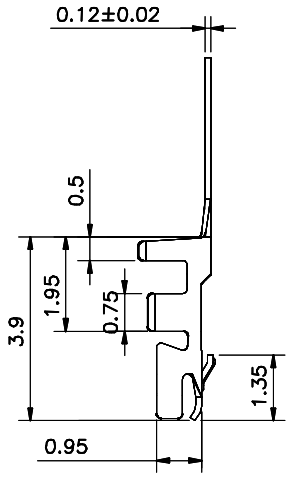


**产品编码：**

D1004– T O P . XX –X
① ② ③ ④ ⑤

① Series NO.
② T: Terminal
③ □: Standard
④ P: Phosphor Bronze
⑤ Plating Code:

| 定义 | | | 编码 |
|---|---|---|---|
| ◎ 全锡 | | | A |
| ◎ Gold plated | | | |
| flash | B | 15u″ | F |
| 10u″ | E | 30u″ | J |
| ◎ V为环保电镀 | | | |

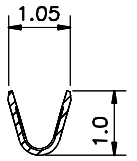


SECTION A–A
SCALE 10:1

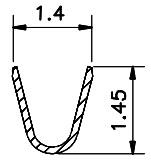


SECTION B–B
SCALE 10:1

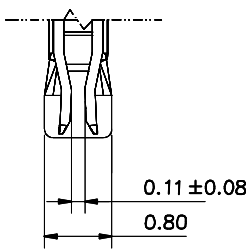


DETAIL C
SCALE 15:1

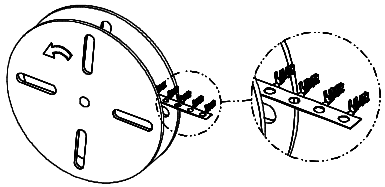

端子电镀后绕向示意图

| PART NO. | Wire Range | Insulation O.D. | Material | Finish DESCRIPTION | Qty/Reel |
|---|---|---|---|---|---|
| D1004–TOP.VB–X | AWG#28–#32 | 0.65~0.92mm | Phosphor Bronze | 30u" Min. NICKEL Under PLATING OVER ALL GOLD FLASH PLATING OVER ALL(LEAD FREE). | 16000PCS |
| D1004–TOP.VA–X | AWG#28–#32 | 0.65~0.92mm | Phosphor Bronze | 30u" Min. NICKEL PLATING AS BASE; 100u" Min. TIN PLATING OVER ALL(LEAD FREE). | 16000PCS |
| D1004–TOP–X | AWG#28–#32 | 0.65~0.92mm | Phosphor Bronze | NO PLATING | 16000PCS |

| GENERL TOLERANCE | | 制名 (DR.) | Ring. li | 料号 PART NO. | D1004–TOP.XX–X | 版本 REV. | C |
|---|---|---|---|---|---|---|---|
| X.±0.30 | X.°±2° | 审核 (CHK.) | Knox. Jin | 品名 TITLE | 端子 | 页次 SHEET | 1/1 |
| .X±0.20 | .X°±1° | 核准 (APPD.) | Knox. Jin | 客户料号 CUTM.NO. | | | |
| .XX±0.15 | .XX°±0.5° | 第1版 (OR.D.) | 2012.08.17 | Xinya Electronics 苏州新亚电通有限公司 | | | |
| .XXX±0.05 | .XXX°±0.5° | 单位 UNITS | MM 比例 SCALE 1:1 | SUZHOU XINYA ELECTRONIC COMMUNICATION Co. LTD. | | | |

塑胶规格图号DRAWING NO. D1004001S

# HF

| 版本 REV. | 日期 DATE | DCN NO. | 变更内容 DESCRIPTION | 制图 DRAWN |
|---|---|---|---|---|
| 1 | | | | |

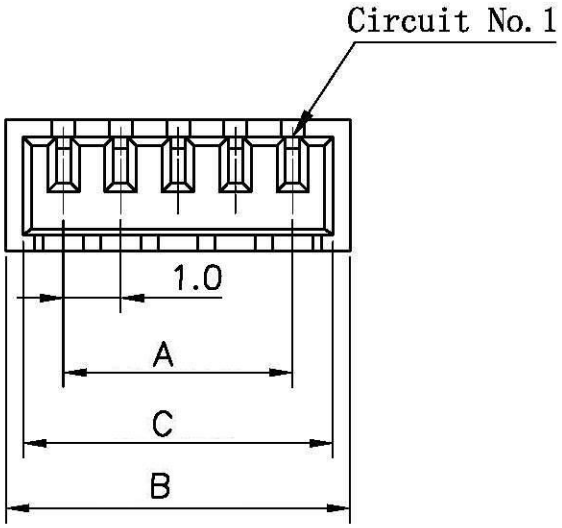


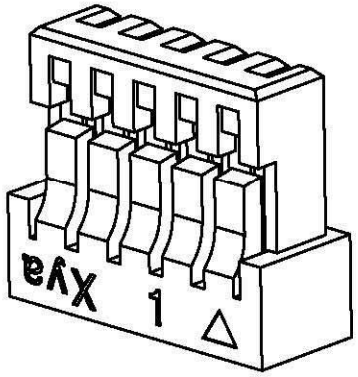


Material:
Nylon 66 UL 94V-0
Color Nature

## Product Code:

D1004 - XX P - X - HF
① ② ③

① Series No.
② Circuits Number
③ HF: Halogen Free

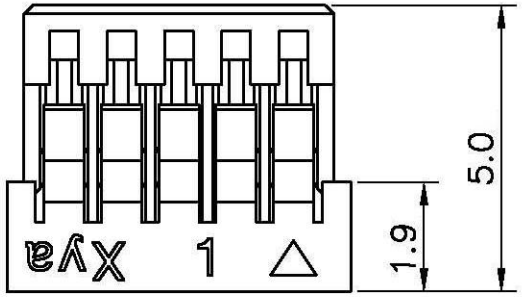


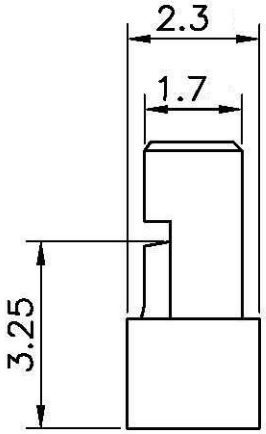


DIM. A = 1.00 * NO. OF SPACES
DIM. B = DIM. A + 2.00
DIM. C = DIM. A + 1.40
* AVAILABLE IN 2 THROUGH 20 CIRCUITS

| | | | | | | | |
|---|---|---|---|---|---|---|---|
| GENERL TOLERANCE | | 制图 (DR.) | Ring.li | 料号 PART NO. | D1004-XXP-X-HF | 版本 REV. | 1 |
| X.±0.50 | X.°±2° | 审核 (CHK.) | Knox.Jin | 品名 TITLE | Housing | 页次 SHEET | 1/1 |
| .X±0.30 | .X°±1° | 核准 (APPD.) | Knox.Jin | 客户料号 CUTM.NO. | | | |
| .XX±0.20 | .XX°±0.5° | 第1版 (OR.D.) | 2013.01.11 | Xinya | 苏州新亚电通有限公司 | | |
| .XXX±0.10 | .XXX°±0.5° | 单位 UNITS | MM 比例 SCALE 1:1 | SUZHOU XINYA ELECTRONIC COMMUNICATION Co. LTD. | | | |

端子规格图号DRAWING NO.
D1251TOP002S

| 版本 REV. | 日期 DATE | DCN NO. | 变更内容 DESCRIPTION | 制图 DRAWN |
|---|---|---|---|---|
| B | 2015.06.22 | 2141506005C | 增加标注说明 | 王腾 |
| C | 2015.06.22 | | 开口尺寸变更 | 王腾 |
| D | 2024.07.24 | | 修改端子最大铆压线径由1.0mmMax调整为0.9mmMax | 范东林 |

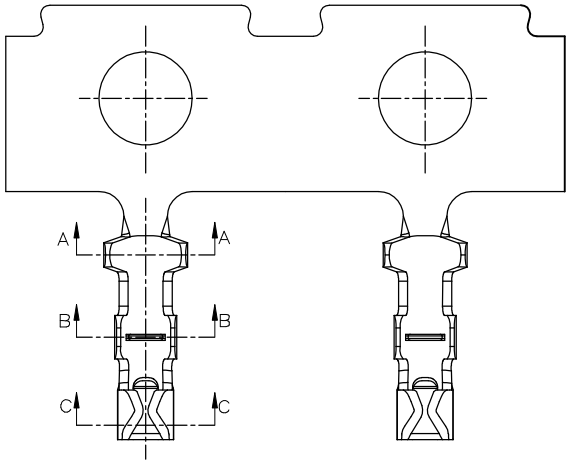


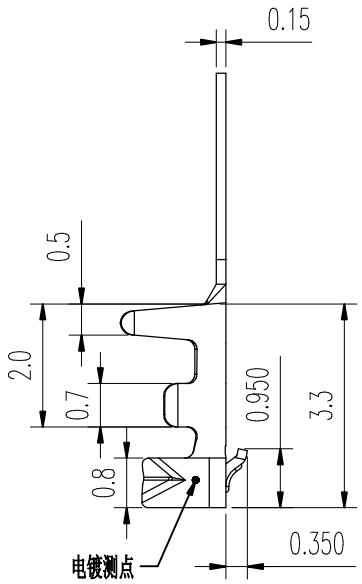


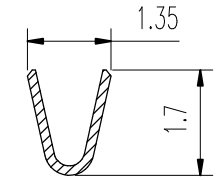


Section A–A

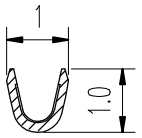


Section B–B

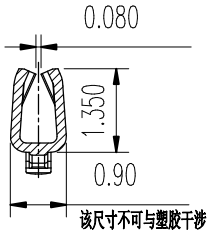


Section C–C

产品编码：

D1251 – T O P . XX – X
① ② ③ ④ ⑤

① Series No.
② T:Terminal
③ O:Standard
④ P:Phosphor Bronze
⑤ Plating Code:

| Definition | Code |
|---|---|
| ◎ Tin Plating | A |
| ◎ Gold Flash | B |
| ◎ 3u″ Gold Plating | C |
| ◎ 10u″ Gold Plating | E |
| ◎ 15u″ Gold Plating | F |
| Prefix "V" means lead free plating | |

| Material Type | Material Thickness | Plating Thickness | Crimped Wire | Insulation O.D. |
|---|---|---|---|---|
| Phosphor Bronze | 0.15mm | Gold or 120μ″ min Tin plated Over 30u″ Min Nickel Plated | AWG28#~32# | 0.90mm(max) |

| | | | | | | | | |
|---|---|---|---|---|---|---|---|---|
| GENERL TOLERANCE | | 制图 (DR.) | VIC. WONG | 料号 PART NO. | D1251-TOP.XX-X | 版本 REV. | D | |
| X.±0.35 | X.°±2° | 审核 (CHK.) | KNOX. JIN | 品名 TITLE | TERMINAL | 页次 SHEET | 1/1 | |
| .X±0.30 | .X°±1° | 核准 (APPD.) | KNOX. JIN | 客户料号 CUTM.NO. | | | | |
| .XX±0.20 | .XX°±0.5° | 第1版 (OR.D.) | 2014.11.17 | Xinya Electronics 苏州新亚电通有限公司 | | | | |
| .XXX±0.10 | .XXX°±0.5° | 单位 UNITS | MM | 比例 SCALE | 1:1 | SUZHOU XINYA ELECTRONIC COMMUNICATION Co. LTD. | | |

| 版本 REV. | 日 期 DATE | DCN NO. | 变更内容 DESCRIPTION | 制图 DRAWN |
|---|---|---|---|---|
| B | | | | |

塑胶规格图号DRAWING NO. D1251002S

| Part No | Dimensions | | |
|---|---|---|---|
| | A | B | C |
| 2P | | 3.00 | 4.25 |
| 3P | 2.50 | 4.25 | 5.50 |
| 4P | 3.75 | 5.50 | 6.75 |
| 5P | 5.00 | 6.75 | 8.00 |
| 6P | 6.25 | 8.00 | 9.25 |
| 7P | 7.50 | 9.25 | 10.50 |
| 8P | 8.75 | 10.50 | 11.75 |
| 9P | 10.00 | 11.75 | 13.00 |
| 10P | 11.25 | 13.00 | 14.25 |
| 11P | 12.50 | 14.25 | 15.50 |
| 12P | 13.75 | 15.50 | 16.75 |
| 13P | 15.00 | 16.75 | 18.00 |
| 14P | 16.25 | 18.00 | 19.25 |
| 15P | 17.50 | 19.25 | 20.50 |
| 16P | 18.75 | 20.50 | 21.75 |
| 17P | 20.00 | 21.75 | 23.00 |
| 18P | 21.25 | 23.00 | 24.25 |
| 19P | 22.50 | 24.25 | 25.50 |
| 20P | 23.75 | 25.50 | 26.75 |

4~20P 双卡点

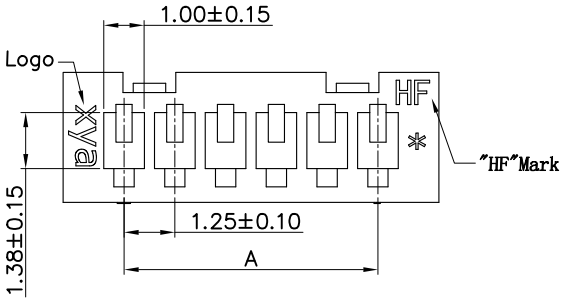


2~3P 单卡点

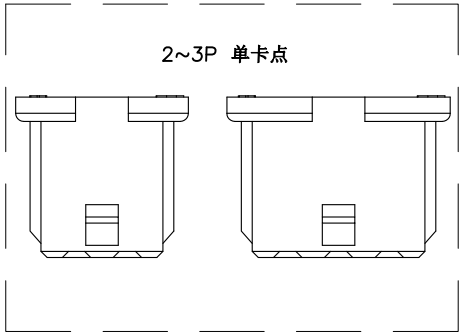

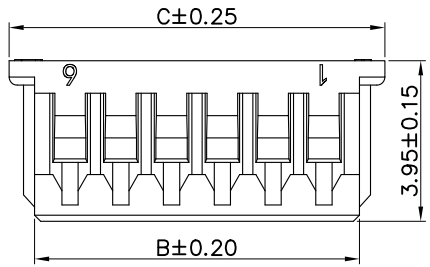


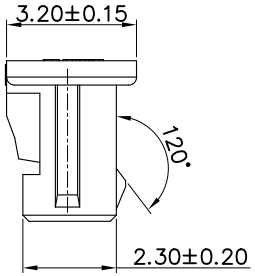


D1251 - XX P - X - HF

① ② ③

① Series No.

② Circuits Number

③ Halogen Free

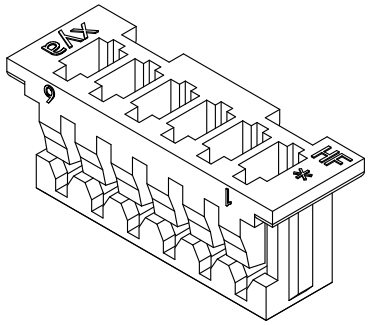


3D VIEW

Specifications:

1. Temperature range: -40℃∽85℃
2. Rated voltage: 125V AC/DC
3. Rated current: 1A AC,DC
4. Withstand voltage: 250V/minute
5. Contact Resistance: 20mΩ max
6. Insulation resistance: 100MΩ min
7. Material: PA66 , UL94V-0 . White

| | | | | | | | |
|---|---|---|---|---|---|---|---|
| GENERL TOLERANCE | | 制 图 (DR.) | | 料 号 PART NO. | D1251-XXP-X-HF | 版 本 REV. | A |
| X.±0.30 | X.°±2° | 审 核 (CHK.) | | 品 名 TITLE | P1.25 Housing | 页 次 SHEET | 1/1 |
| .X±0.25 | .X°±1° | 核 准 (APPD.) | | 客户料号 CUTM.NO. | | | |
| .XX±0.20 | .XX°±0.5° | 第1版 (OR.D.) | 2014.11.07 | | | | |
| .XXX±0.15 | .XXX°±0.5° | 单 位 UNITS | MM 比 例 SCALE 1:1 | | | | |

苏州新亚电通有限公司

SUZHOU XINYA ELECTRONIC COMMUNICATION Co. LTD.

UL Product iQ®

*Note: We are enhancing our systems and you may notice duplicate entries/missing/outdated data. During this interim period, please contact our Customer Service at https://www.ul.com/about/locations.*

# Connectors for Use in Data, Signal, Control and Power Applications - Component

**COMPANY**

**SUZHOU XINYA ELECTRIC COMMUNICATION CO LTD**
No.98 Ruyuan Rd
Xiangcheng Industrial District
Suzhou, Jiangsu 215132 China

E216870

Marking: Company name and model designation.
Note: For additional marking information, refer to the Guide Information Page.

Model(s): D1254, D2014, D2018, D7913, S4061, W7913

Model(s): Cat. No. M3560 followed by dash, followed by 02 thru 03.

Model(s): Cat. No. M7060 followed by dash, followed by 02 thru 06, followed by S.

Model(s): Cat. No. M8261 followed by dash, followed by 02 thru 03, followed by S.

Model(s): D1007, followed by -03 thru 06, followed by P

Model(s): D1014, followed by -03 thru 06, followed by P

Model(s): D1202, followed by -02 thru 03, followed by P

Model(s): D1256, followed by -02 thru 12, followed by P

Model(s): DE011-02, followed by -02, followed by P

Model(s): WE011-02, followed by -02, followed by P

**Connectors,** Model(s): 2361 Series, 3961 Series, 3962 Series, Cat. No. D12515, Cat. No. M7060, Cat. No. M8261, Cat. No. S101 -2 thru -14, Cat. No. S1316, Cat. No. S2013, f/b -2 thru -12, Cat. No. W2012, f/b -4, -6, -8 thru -40, Cat. No. W2017, followed by thru -14, Cat. No. W2325 followed by -2 thru -5, Cat. No. WE011, followed by -02, Cat. Nos. D1004, Cat. Nos. D1006, Cat. Nos. D7913 and W7913, f/b -2, Cat. Nos. DE011, followed by -02, D1002-02 thru D1002-10, D1251-02 thru D1251-15, D1257-02 thru D1257-10, D2001-02P thru D2001-16P, D2006-06P, D2006-08P, D2006-10P, D2006-12P, D2006-14P, D2006-16P, D2006-18P, D2006-20P, D2006-22P, D2006-24P, D2006-26P, D2006-28P, D2006-30P, D2006-32P, D2006-34P, D2006-36P, D2006-38P, D2006-40P, D2008-02 thru D2008-16, D2010-02 thru D2010-15, D2011-02P thru D2011-16P, P2404-02, P2404-03, P2404-04, P2404-05, P2404-06, P2404-07, P2404-08, P2404-09, P2404-10, P2404-15, P2404-20, P2404-25, P2404-30, S1013, S1311-02 thru S1311-15, S1312-10, S1312-20, S1312-30, S1312-40, S1315-02 thru S1315-15, W2010-04, W2010-06, W2010-08, W2010-10, W2010-12, W2010-14, W2010-16, W2010-18, W2010-20, W2010-22, W2010-24, W2010-26, W2010-28, W2010-30, W2010-32, W2010-34, W2010-36, W2010-38, W2010-40, W2011-02 thru W2011-15, W2015-02 thru W2015-16, W2411-02 thru W2411-20, W2415-02 thru W2415-15, W3511-02, W7011-03A, W7011-03A-V01, W7011-04A, W7011-04A-V02, W7011-05A, W7011-05A-V02

**Connectors,** Model(s): W2511 , followed by 03, 04, 05, 06, 07, or 08.

Last Updated on 2024-12-06

The appearance of a company's name or product in this database does not in itself assure that products so identified have been manufactured under UL Solutions' Follow - Up Service. Only those products bearing the UL Mark should be considered to be Certified and covered under UL Solutions' Follow - Up Service. Always look for the Mark on the product.

UL Solutions permits the reproduction of the material contained in Product iQ subject to the following conditions: 1. The Guide Information, Assemblies, Constructions, Designs, Systems, and/or Certifications (files) must be presented in their entirety and in a non-misleading manner, without any manipulation of the data (or drawings). 2. The statement "Reprinted from Product iQ with permission from UL Solutions" must appear adjacent to the extracted material. In addition, the reprinted material must include a copyright notice in the following format: "©2025 UL LLC."

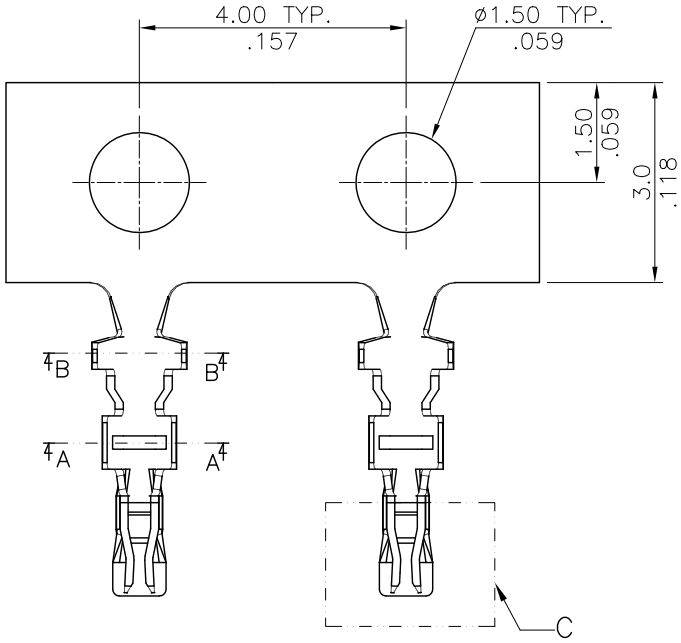


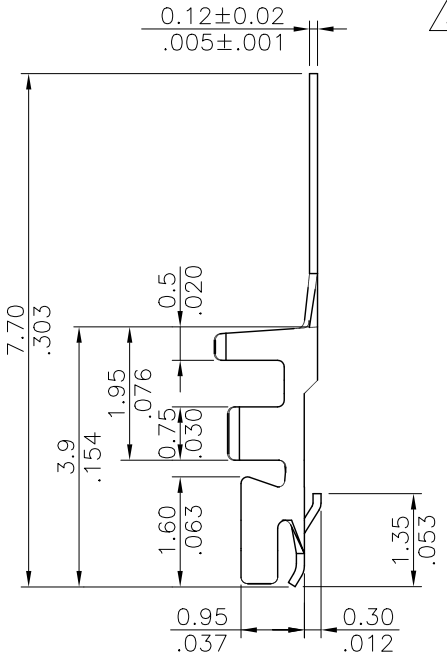


△3

| Wire Range | Insulation Diameter | Reel Q'ty |
|---|---|---|
| AWG #28~#32 | 0.65~0.92(mm) | 16,000 PCS. |

## Ordering Code:

CI14 T01 1 P E 0
① ② ③ ④ ⑤ ⑥

① Series No.
② Type: T01= AWG #28~ #32
③ Plating: 1= Tin Plated over Cu
④ Material: P= Phosphor Bronze
⑤ Plating method: E= Pre-tinned
⑥ Option: 0= Standard

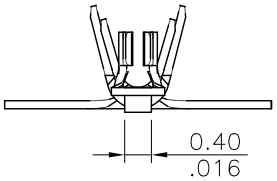


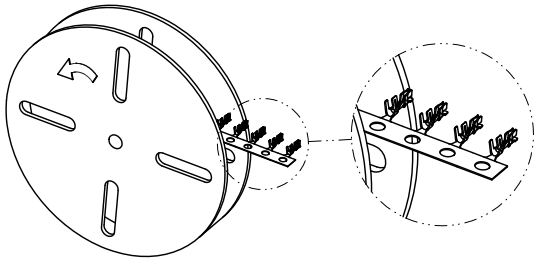

電鍍後捲料方向

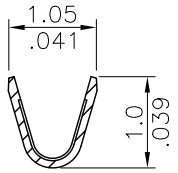


SEC. A-A
SCALE 10/1

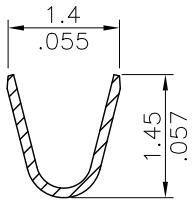


SEC. B-B
SCALE 10/1

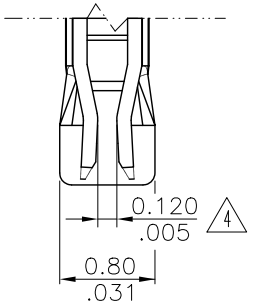


DETAIL C
SCALE: 15/1

RoHS Compliant

| SYM | NAME | DATE | REVISIONS |
|---|---|---|---|
| △4 | Tim | 05/10-10' | ECN10155 |
| △3 | Eager | 09/03-09' | ECN09452 |
| △2 | Eager | 06/18-09' | ECN09310 |
| △1 | Eager | 06/05-09' | Change Plating Method |

CVILUX CORP
2010.06.01
ISSUED

| | | DATE |
|---|---|---|
| DRAWN BY: | Tim | 5/10-10' |
| ENGINEER: | Clark | 5/10-10' |
| CHECKED BY: | David | 5/10-10' |
| APPROVED BY: | Alex | 5/10-10' |

UNIT: mm / inch

TOLERANCE UNLESS OTHERWISE SPECIFIED

| | | | |
|---|---|---|---|
| .X | ± 0.25/.010 | X.° | ± 1° |
| .XX | ± 0.15/.006 | .X° | ± |
| .XXX | ± 0.05/.002 | .XX° | ± |

TITLE: FOR CI14 SERIES CRIMP TERMINAL

MATERIAL:

FINISH:

瀚荃股份有限公司
CviLux Corporation

| DRAWING NO. | CI1403SC | PART NO. | CI14T011PE0 |
|---|---|---|---|
| SCALE | 8 / 1 | SHEET | 1 OF 1 |

Material:

Glass filled polyester UL 94V-0,
Color Nature

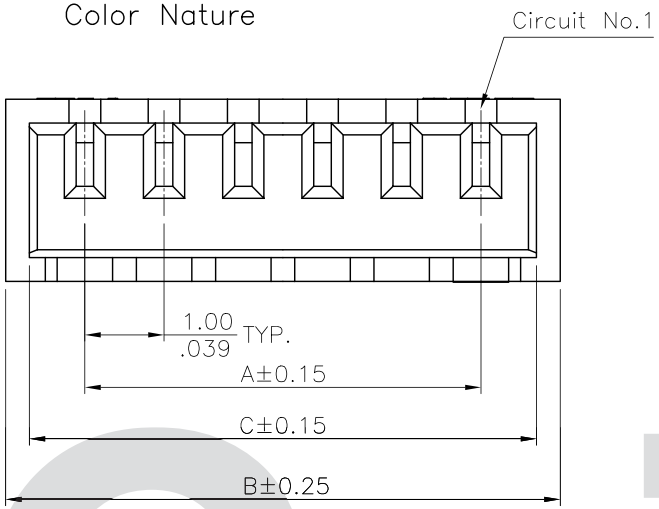


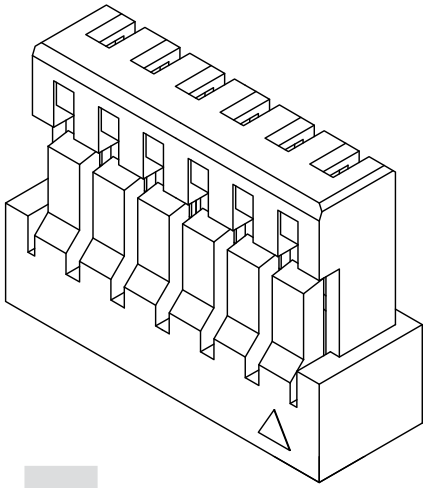

## Ordering Code

CI14 ① ** ② S ③ 000A ④ - NH ⑤

① Series No.
② No. of Circuits: 02~20 Pin
③ S= Connector housing
④ Other option:
000A= Holes
⑤ Other option:
-NH= Halogen-Free

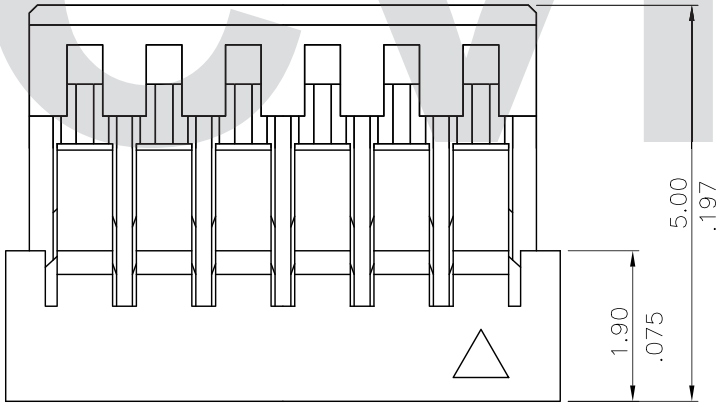


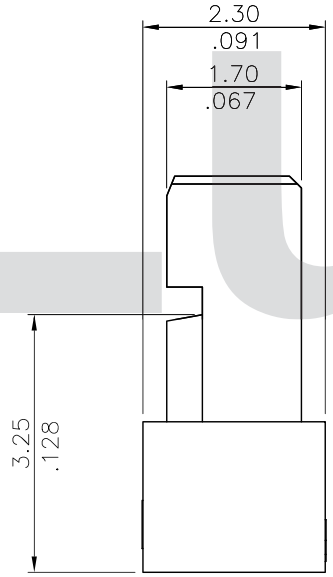


DIM. A = 1.00 x NO. OF SPACES
DIM. B = DIM. A + 2.00
DIM. C = DIM. A + 1.40
* AVAILABLE IN 2 THROUGH 20

Halogen-Free

RoHS Compliant

CviLux

| SYM | NAME | DATE | REVISIONS | | | DATE |
|---|---|---|---|---|---|---|
| 4 | | | CVILUX CORP 2010.04.20 ISSUED | | | |
| 3 | | | | DRAWN BY: | Tim | 4/15-10' |
| 2 | | | | ENGINEER: | Clark | 4/15-10' |
| 1 | | | | CHECKED BY: | David | 4/15-10' |
| | | | | APPROVED BY: | David | 4/15-10' |

UNIT: mm / inch

TOLERANCE UNLESS OTHERWISE SPECIFIED

| | |
|---|---|
| .X ± 0.30/.012 | X.° ± 1° |
| .XX ± 0.20/.008 | .X° ± |
| .XXX ± 0.10/.004 | .XX° ± |

TITLE: CI14 SERIES HOUSING

MATERIAL:

CUSTOMER:

瀚荃股份有限公司
CviLux Corporation

| DRAWING NO. | CI1420SA | PART NO. | CI14**S000A-NH |
|---|---|---|---|
| SCALE | 10 / 1 | SHEET | 1 OF 1 |

iq.ul.com

PROSPECTOR® CLICK TO CONTINUE

View additional material information including performance and processing data

The information presented on the UL Prospector datasheet was acquired by UL Prospector from the producer of the material. UL Prospector makes substantial efforts to assure the accuracy of this data. However, UL Prospector assumes no responsibility for the data values and strongly encourages that upon final material selection, data points are validated with the material supplier.

Component - Plastics E44716

Guide Information

## SOLVAY ENGINEERING PLASTICS GBU

QUARTIER BELLE-ETOILE, AVE RAMBOZ, BOITE POSTALE 64, ST FONS CEDEX 69192 FR

## A 50H1 (r3)(f2)

Polyamide 66 (PA66), unfilled "Technyl", furnished as pellets

| Color | Min. Thk (mm) | Flame Class | HWI | HAI | RTI Elec | RTI Imp | RTI Str |
|---|---|---|---|---|---|---|---|
| ALL | 0.4 | V-0 | 4 | 3 | 130 | 105 | 120 |
| | 0.75 | V-0 | 2 | 3 | 130 | 105 | 120 |
| | 1.5 | V-0 | 2 | 3 | 130 | 105 | 120 |
| | 3.0 | V-0 | 2 | 3 | 130 | 105 | 120 |

Comparative Tracking Index (CTI): 0

Dielectric Strength (kV/mm): -

High-Voltage Arc Tracking Rate (HVTR): 0

Dimensional Stability (%): -

Inclined Plane Tracking (IPT) kV: 1.5

Volume Resistivity ($10^x$ ohm-cm): -

Surface Resistivity ($10^x$ ohm-cm):

High Volt, Low Current Arc Resis (D495): 6

(f2) - Subjected to one or more of the following tests: Ultraviolet Light, Water Exposure or Immersion in accordance with UL 746C, where the acceptability for outdoor use is to be determined by UL.

(r3) - Virgin and regrind up to 50% by weight inclusive have the same basic material characteristics

NOTE - Materials designated "Technyl" may be prefixed by the letters "TY".

ANSI/UL 94 small-scale test data does not pertain to building materials, furnishings and related contents. ANSI/UL 94 small-scale test data is intended solely for determining the flammability of plastic materials used in the components and parts of end-product devices and appliances, where the acceptability of the combination is determined by UL.

Report Date: 2004-12-14

Last Revised: 2016-08-02

© 2020 UL LLC

**IEC and ISO Test Methods**

| Test Name | Test Method | Units | Thk (mm) | Value |
|---|---|---|---|---|
| Flammability | IEC 60695-11-10 | Class (color) | 0.4 | V-0 (ALL) |
| | | | 0.75 | V-0 (ALL) |
| | | | 1.5 | V-0 (ALL) |
| | | | 3.0 | V-0 (ALL) |
| Glow-Wire Flammability (GWFI) | IEC 60695-2-12 | °C | 0.4 | 960 |
| | | | 0.75 | 960 |
| | | | 1.5 | 960 |
| | | | 3.0 | 960 |
| Glow-Wire Ignition (GWIT) | IEC 60695-2-13 | °C | 0.4 | 960 |
| | | | 0.75 | 960 |
| | | | 1.5 | 775 |
| | | | 3.0 | 700 |
| IEC Comparative Tracking Index | IEC 60112 | Volts (Max) | - | - |
| IEC Ball Pressure | IEC 60695-10-2 | °C | - | 190 |
| ISO Heat Deflection (1.80 MPa) | ISO 75-2 | °C | - | - |
| ISO Tensile Strength | ISO 527-2 | MPa | - | - |
| ISO Flexural Strength | ISO 178 | MPa | - | - |
| ISO Tensile Impact | ISO 8256 | $kJ/m^2$ | - | - |
| ISO Izod Impact | ISO 180 | $kJ/m^2$ | - | - |
| ISO Charpy Impact | ISO 179-2 | $kJ/m^2$ | - | - |

This document is the property of Tarng Yu Enterprise and is delivered on the express condition that it is not to be disclosed, reproduced or used, in whole or in part, for manufacture or sale by anyone other than Tarng Yu Enterprise without its prior consent, and that no right is granted to disclose or to use any information in this document.

| REV | ECN NO. | DESCRIPTION | DATE | APP'D |
|---|---|---|---|---|
| C/3 | N/A | ADD FINISH PLATED(B*) | 12/25/19' | Paul |
| C/4 | N/A | TEST POINT OF PLATE | 09/09/24' | Paul |
| C/5 | N/A | MODIFY FINISH PLATED (B*:50u" NICKEL PLATED) | 05/10/25' | Chuer Xie |

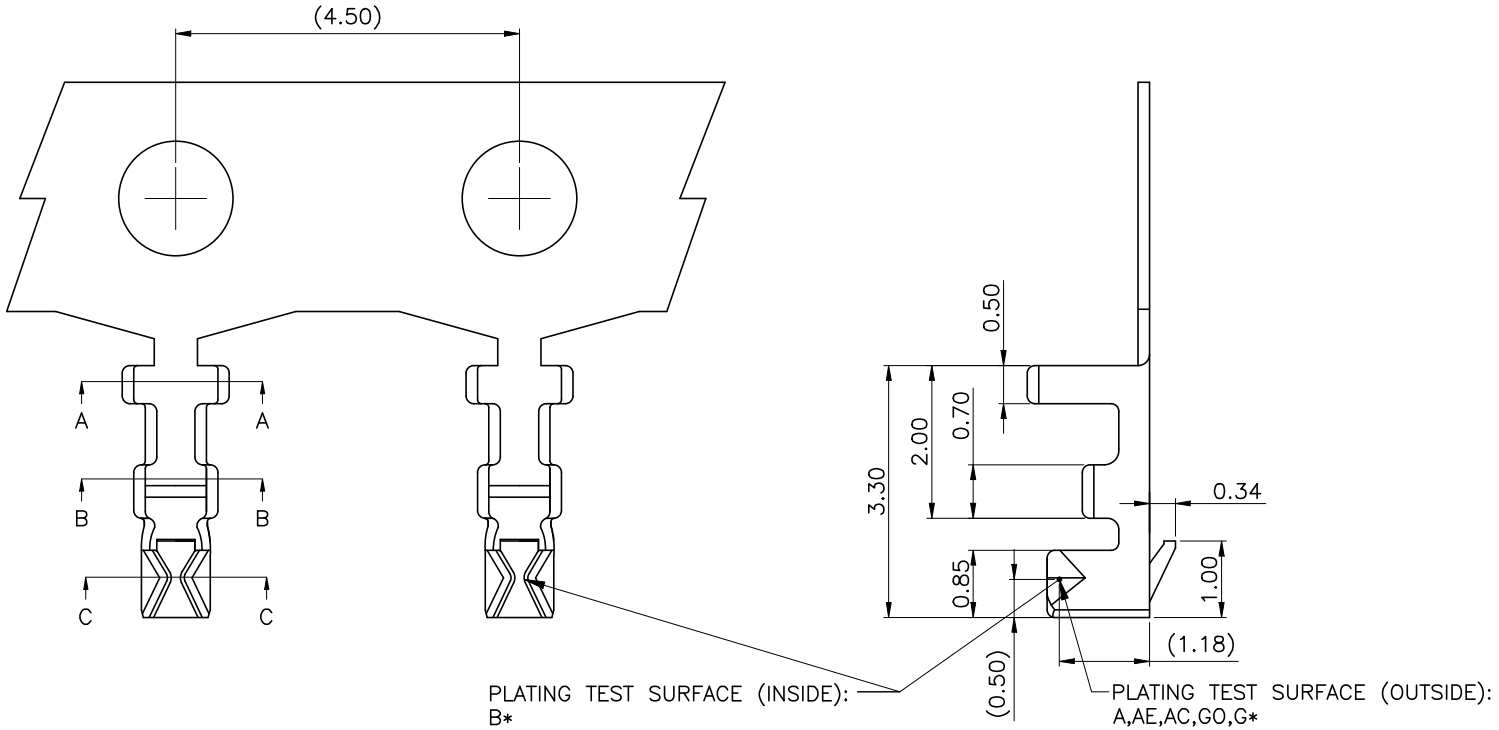


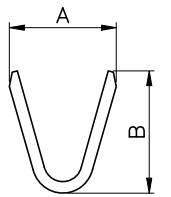


Section A–A

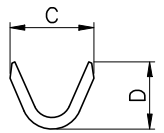


Section B–B

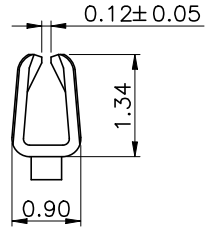


Section C–C

CONTACT INFORMATION:

| Part No. | Wire Range | Insulation O.D. | DIM.(mm) | | | |
|---|---|---|---|---|---|---|
| | | | A | B | C | D |
| TU1252TPO–X | AWG#28~#32 | ø0.50~1.00mm | 1.40 | 1.60 | 1.10 | 0.90 |
| TU1252TPL–X | AWG#32~#34 | ø0.40~0.60mm | 1.20 | 1.00 | 1.10 | 0.90 |
| TU1252TPH–X | AWG#26~#28 | ø1.00mm(Max.) | 1.40 | 1.60 | 1.20 | 1.10 |

NOTES:
1. MATERIAL: PHOSPHOR BRONZE, t=0.15mm
2. FINISH: A--TIN-PLATED OVER 15u"NICKEL
   AE--PRESSING BEFORE BRIGHT-60u"TIN PLATED OVER 15u"NICKEL
   AC--PRESSING BEFORE MATTE-60u"TIN PLATED OVER 15u"NICKEL
   GO--GOLD FLASH OVER 15u"NICKEL
   G*--GOLD *u" OVER 50u" NICKEL
   B*--*u" TIN PLATED ON CONTACT AREA INSIDE, OVER 50u"NICKEL
3. APPLICABLE WIRE RANGE: SEE CONTACT INFORMATION
4. INSULATION O.D.: SEE CONTACT INFORMATION
5. USE WITH: TU1252 SERIES HOUSING
6. ORDERING CODE: TU1252TPX-X
   O--STANDARD
   L--LOW CRIMP HEIGHT
   H--HIGH CRIMP HEIGHT
   FINISH SEE NOTE 2

| TOLERANCE | |
|---|---|
| X.X | ±0.25 |
| X.XX | ±0.15 |
| ANGULAR | 3' |
| UNLESS OTHERWISE SPECIFIED | |

| APPROVALS | | DATE |
|---|---|---|
| DRAWN | Chuer Xie | 05/15/25' |
| CHK'D | Carter Shi | 05/15/25' |
| APP'D | Paul Chen | 05/15/25' |
| UNITS mm | SCALE 1:1 | SIZE: A4 |

唐虞企業股份有限公司
TARNG YU ENTERPRISE CO., LTD.

| | |
|---|---|
| PART NO. | TU1252TPX-X |
| DRAWING NO. | EN-TU1252TPX-X |
| SHEET 1 OF 2 | |

TITLE:
WIRE TO BOARD,
PITCH 1.25mm, CRIMP TYPE,
CONTACT

REV. C/5

This document is the property of Tarng Yu Enterprise and is delivered on the express condition that it is not to be disclosed, reproduced or used, in whole or in part, for manufacture or sale by anyone other than Tarng Yu Enterprise without its prior consent, and that no right is granted to disclose or to use any information in this document.

| REV | ECN NO. | DESCRIPTION | DATE | APP'D |
|---|---|---|---|---|
| C/2 | N/A | ADD FINISH(MATTE TIN) AND ADD HIGH CRIMP HEIGHT SPECIFICATION | 04/07/16' | Paul |
| C/3 | N/A | ADD FINISH PLATED(B*) | 12/25/19' | Paul |
| C/4 | N/A | TEST POINT OF PLATE | 09/09/24' | Paul |

PCAKING MATERIAL

| PART NAME | DIM(mm) |
|---|---|
| CARTON | 470*470*210 |

PCAKING CAPACITY

| PART NO. | PCS/RE | RE/BC | PCS/BC |
|---|---|---|---|
| TU1252TPX-X | 15,000PCS/RE | 8 RE/BC | 120,000 PCS/BC |

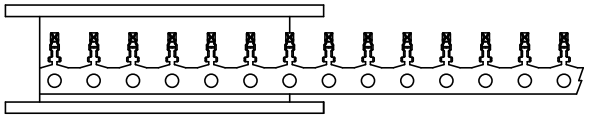

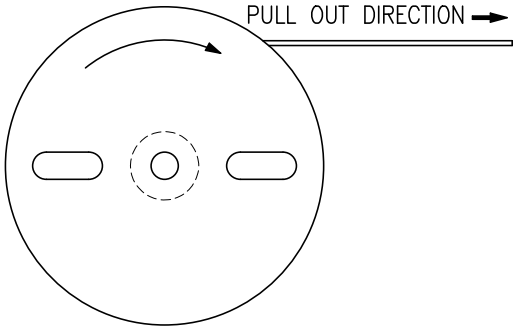


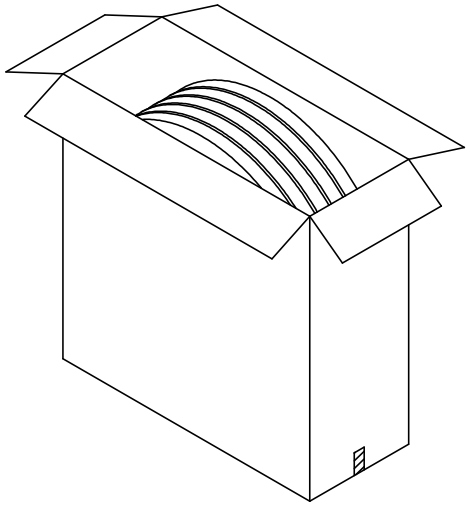

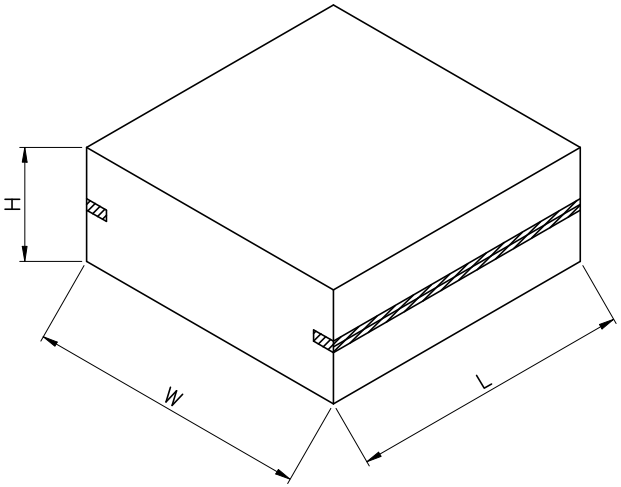


| TOLERANCE | | APPROVALS | | DATE | |
|---|---|---|---|---|---|
| X.X | ±0.25 | DRAWN | Chuer Xie | 05/15/25' | 唐虞企業股份有限公司 TARNG YU ENTERPRISE CO., LTD. |
| X.XX | ±0.15 | CHK'D | Carter Shi | 05/15/25' | PART NO. TU1252TPX-X |
| ANGULAR | 3' | APP'D | Paul Chen | 05/15/25' | DRAWING NO. EN-TU1252TPX-X |
| UNLESS OTHERWISE SPECIFIED | | UNITS mm | SCALE 1:1 | SIZE: A4 | SHEET 2 OF 2 |

TITLE: WIRE TO BOARD, PITCH 1.25mm, CRIMP TYPE, CONTACT

REV. C/5

This document is the property of Tarng Yu Enterprise and is delivered on te express condition that it is not to be disclosed, reproduced or used, in whole or in part, for manufacture or sale by anyone other than Tarng Yu Enterprise without its prior consent, and that no right is granted to disclose or to use any information in this document.

# Engineer Drawing

| REV | ECN NO. | DESCRIPTION | DATE | DRAWN |
|---|---|---|---|---|
| C/3 | N/A | ADD 20PIN SPECIFICATION | 09/23/14' | Ziwen Kong |
| C/4 | N/A | ADD 17~19PIN SPECIFICATION | 08/26/19' | Cong Wang |
| | | | | |

| COLOR TABLE | |
|---|---|
| (VOID) | WHITE |
| C1 | BLACK |
| C2 | BROWN |
| C3 | RED |
| C4 | ORANGE |
| C5 | YELLOW |
| C6 | GREEN |
| C7 | BLUE |
| C8 | PURPLE |
| C9 | GREY |
| CW | DARK RED |
| CM | CREAM |

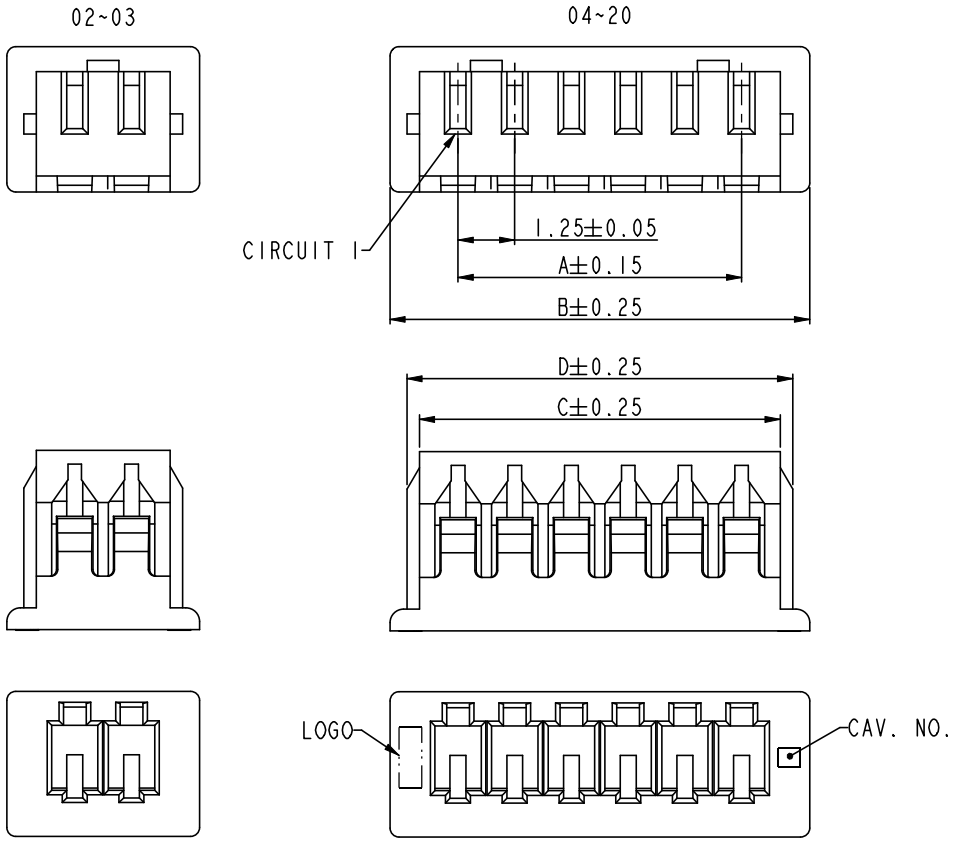


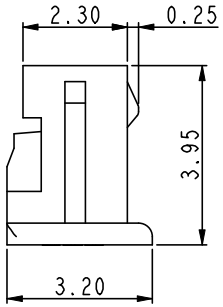


| PIN | A | B | C | D |
|---|---|---|---|---|
| 02 | -- | 4.25 | 2.95 | 3.50 |
| 03 | 2.50 | 5.50 | 4.20 | 4.75 |
| 04 | 3.75 | 6.75 | 5.45 | 6.00 |
| 05 | 5.00 | 8.00 | 6.70 | 7.25 |
| 06 | 6.25 | 9.25 | 7.95 | 8.50 |
| 07 | 7.50 | 10.50 | 9.20 | 9.75 |
| 08 | 8.75 | 11.75 | 10.45 | 11.00 |
| 09 | 10.00 | 13.00 | 11.70 | 12.25 |
| 10 | 11.25 | 14.25 | 12.95 | 13.50 |
| 11 | 12.50 | 15.50 | 14.20 | 14.75 |
| 12 | 13.75 | 16.75 | 15.45 | 16.00 |
| 13 | 15.00 | 18.00 | 16.70 | 17.25 |
| 14 | 16.25 | 19.25 | 17.95 | 18.50 |
| 15 | 17.50 | 20.50 | 19.20 | 19.75 |
| 16 | 18.75 | 21.75 | 20.45 | 21.00 |
| 17 | 20.00 | 23.00 | 21.70 | 22.25 |
| 18 | 21.25 | 24.25 | 22.95 | 23.50 |
| 19 | 22.50 | 25.50 | 24.20 | 24.75 |
| 20 | 23.75 | 26.75 | 25.45 | 26.00 |

| INDEX | PART NAME | MATERIAL |
|---|---|---|
| 1 | HOUSING | (HF) NYLON 66, UL94-V0; COLOR: SEE ORDERING CODE |

NOTES

1. USE WITH: TUI252 CRIMP TERMINAL
2. MATES WITH: TUI252 SERIES WAFER / TYI252 FEMALE HOUSING
3. ORDERING CODE: TUI252HNO-NP-X-NL

NO. OF PINS
02: 2 PINS
03: 3 PINS
...

INSULATION COLOR
SEE COLOR TABLE

HALOGEN FREE

TOLERANCE

X.X ±0.25

X.XX ±0.15

ANGULA 3°

UNLESS OTHERWISE SPECIFIED

| APPROVALS | DATE |
|---|---|
| DRAWN Cong Wang | 08/26/19' |
| CHK'D Carter Shi | 08/26/19' |
| APP'D Paul Chen | 08/26/19' |

UNITS mm | SCALE 1.000 | SIZE:A4 | SHEET 1 OF 2

唐虞企業股份有限公司
TARNG YU ENTERPRISE CO., LTD.

PART NO. TUI252HNO-NP-X-NL

DRAWING NO. EN-TUI252HNO-NP-X-NL

TITLE:
W TO B CONNECTOR,
PITCH 1.25 mm, SINGLE ROW,
CRIMP, INSULATOR

REV.C/4

This document is the property of Tarng Yu Enterprise and is delivered on te express condition that it is not to be disclosed, reproduced or used, in whole or in part, for manufacture or sale by anyone other than Tarng Yu Enterprise without its prior consent, and that no right is granted to disclose or to use any information in this document.

# *Engineer Drawing*

| REV | ECN NO. | DESCRIPTION | DATE | DRAWN |
|---|---|---|---|---|
| C/3 | N/A | ADD 20PIN SPECIFICATION | 09/23/14' | Ziwen Kong |
| C/4 | N/A | ADD 17~19PIN SPECIFICATION | 08/26/19' | Cong Wang |
| | | | | |

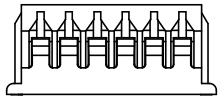

CONNECTOR

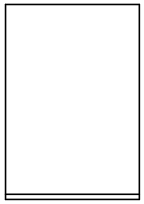

BAG

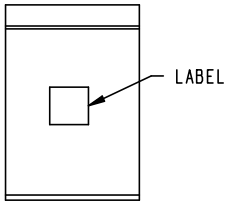


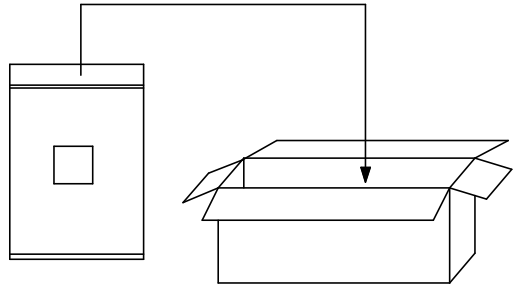

CARTON

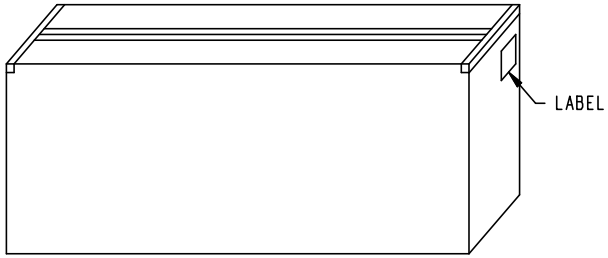


| PIN | PCS/BAG | BAG/BC | PCS/BC | PIN | PCS/BAG | BAG/BC | PCS/BC |
|---|---|---|---|---|---|---|---|
| 02 | 1000 | 200 | 200000 | 12 | 1000 | 60 | 60000 |
| 03 | 1000 | 180 | 180000 | 13 | 1000 | 60 | 60000 |
| 04 | 1000 | 180 | 180000 | 14 | 1000 | 60 | 60000 |
| 05 | 1000 | 150 | 150000 | 15 | 1000 | 60 | 60000 |
| 06 | 1000 | 140 | 140000 | 16 | 1000 | 60 | 60000 |
| 07 | 1000 | 100 | 100000 | 17 | 1000 | 60 | 60000 |
| 08 | 1000 | 80 | 80000 | 18 | 1000 | 60 | 60000 |
| 09 | 1000 | 80 | 80000 | 19 | 1000 | 60 | 60000 |
| 10 | 1000 | 80 | 80000 | 20 | 1000 | 60 | 60000 |
| 11 | 1000 | 80 | 80000 | | | | |

NOTES
1. MATERIAL:
   CARTON: FIBREBOARD, CORRUGATED, DOUBLE WALL.
   PE BAG: POLYETHYLENES, TRANSPARENT COLOR.
2. CARTON DIMENSION: 400*280*280

| TOLERANCE | APPROVALS | DATE | 唐虞企業股份有限公司 TARNG YU ENTERPRISE CO., LTD. | |
|---|---|---|---|---|
| X.X ±0.25 | DRAWN Cong Wang | 08/26/19' | | |
| X.XX ±0.15 | CHK'D Carter Shi | 08/26/19' | PART NO. TUI252HNO-NP-X-NL | TITLE: W TO B CONNECTOR, PITCH 1.25 mm, SINGLE ROW, CRIMP, INSULATOR |
| ANGULA 3° | APP'D Paul Chen | 08/26/19' | DRAWING NO. EN-TUI252HNO-NP-X-NL | |
| UNLESS OTHERWISE SPECIFIED | UNITS mm SCALE 1.000 | SIZE:A4 | SHEET 2 OF 2 | REV.C/4 |

UL Product iQ™

# ECBT2.E191023 - Connectors for Use in Data, Signal, Control and Power Applications - Component

## Connectors for Use in Data, Signal, Control and Power Applications - Component

See General Information for Connectors for Use in Data, Signal, Control and Power Applications - Component

**TARNG YU ENTERPRISE CO LTD** E191023
43 WU-CHUN 6TH RD
WU-KU INDUSTRIAL PARK
NEW TAIPEI, 248 TAIWAN

**Connectors**, Model(s) TB1262HNO, followed by 1X, followed by 2 through 15 or 02 through 09, may be followed by 1 through 15 alphanumeric code

**Connectors**, Model(s) TB1561HNV and TB1561HNR, followed by 02 through 13, may be followed by P, may be followed by 1 through 15 alphanumeric code

**Connectors**, Model(s) TB2061, followed by HNV, followed by 2 through 16 or 02 through 09, may be followed by P, may be followed by 1 through 15 alphanumeric code

**Connectors**, Model(s) TB2061HNR, followed by 2 through 16 or 02 through 09, may be followed by P, may be followed by 1 through 15 alphanumeric code

**Connectors**, Model(s) TB3061, followed by HNR, followed by 2 through 16 or 02 through 09, may be followed by P, may be followed by 1 through 15 alphanumeric code

**Connectors**, Model(s) TB3061, followed by HNV, followed by 2 through 16 or 02 through 09, may be followed by P, C or PC, may be followed by 1 through 15 alphanumeric code

**Connectors**, Model(s) TB6061, followed by HNO, followed by 2 through 15 or 02 through 09, may be followed by P, may be followed by 1 through 15 alphanumeric code

**Connectors**, Model(s) TF2542HNO, followed by 1X, followed by 2 through 15 or 02 through 09, may be followed by 1 through 15 alphanumeric code

**Connectors**, Model(s) TL2080PPSR, followed by -AE, followed by -30, followed by 1 through 30 alphanumeric digits or blank

**Connectors**, Model(s) TL2460WNR, followed by -01 thru -03, may be followed by 2 or 5, may be followed by 1, 2, 3 or blank, may be followed by 1 through 10 alphanumeric codes or blank, may be followed by 0, may be followed by R or blank, may be followed by 1 through 30 alphanumeric codes.

**Connectors**, Model(s) TL2460WNR, followed by -01 thru -03, may be followed by 2 or 5, may be followed by 1, 2, 3 or blank, may be followed by 1 through 10 alphanumeric codes or blank, may be followed by 4, 8 or 9, may be followed by R or blank, may be followed by 1 through 30 alphanumeric codes.

**Connectors**, Model(s) TL2460WNR, followed by -01 thru -03, may be followed by S or blank, may be followed by D, may be followed by R, may be followed by A, B, C or blank, may be followed by 1 through 10 alphanumeric codes or blank, may be followed by M7, M10 or blank, may be followed by 1 through 30 alphanumeric codes.

**Connectors**, Model(s) TL2460WNR, followed by -01 thru -03, may be followed by S or blank, may be followed by R, may be followed by A, B, C or blank, may be followed by 1 through 10 alphanumeric codes or blank, may be followed by 1 through 30 alphanumeric codes.

**Connectors**, Model(s) TL3061WNR, followed by -01 thru -03, followed by 5, followed by 0 or 1, followed by one alphanumeric digit, followed by 0, followed by 1 through 30 alphanumeric digits or blank.

**Connectors**, Model(s) TL3061WNR, followed by -03, followed by 5, followed by 0 or 1, followed by one alphanumeric digit, followed by 1, followed by 1 through 30 alphanumeric digits or blank.

**Connectors**, Model(s) TL3061WNR, followed by -03, followed by 5, followed by 2 or 3, followed by one alphanumeric digit, followed by 0, followed by 1 through 30 alphanumeric digits or blank.

**Connectors**, Model(s) TL4060WNR followed by -01S thru -03S, may be followed by R or blank, may be followed by A thru E or blank, may be followed by 1 through 30 alphanumeric codes or blank.

**Connectors**, Model(s) TL4060WNR, followed by -01 thru -03, may be followed by 5, may be followed by 0 thru 5, may be followed by 1 through 10 alphanumeric codes or blank, may be followed by 0, may be followed by R or blank, may be followed by 1 through 30 alphanumeric codes or blank.

**Connectors**, Model(s) TL4060WNR, followed by -01 thru -03, may be followed by 5, may be followed by 0 thru 5, may be followed by 1 through 10 alphanumeric codes or blank, may be followed by 2, may be followed by R or blank, may be followed by 1 through 30 alphanumeric codes or blank.

**Connectors**, Model(s) TL4060WNR, followed by -01S thru -03S, may be followed by H or R, may be followed by A thru E or blank, may be followed by 1 through 10 alphanumeric codes or blank, may be followed by M7, may be followed by 1 through 30 alphanumeric codes or blank.

**Connectors**, Model(s) TP0501WNV followed by 20, 40 or 50, followed by F or M, may be followed by 1 through 15 alphanumeric code

**Connectors**, Model(s) TP1001WNV-41 followed by F or M, may be followed by 1 through 15 alphanumeric code

**Connectors**, Model(s) TP4522, followed by BE, R or S, followed by 3 through 12 or 03 through 09, may be followed by 1 through 15 alphanumeric code

**Connectors**, Model(s) TP6932, followed by BE, R or S, followed by 2 through 16 or 02 through 09, may be followed by P, may be followed by 1 through 15 alphanumeric code

**Connectors**, Model(s) TS2016HNO followed by -10, followed by 1 thru 2 alphanumeric digits or blank, followed by -1 thru 4 alphanumeric digits or blank, followed by -1 thru 2 alphanumeric digits or blank, followed by -1 thru 2 alphanumeric digits or blank, followed by -1 thru 2 alphanumeric digits or blank, followed by -1 thru 2 alphanumeric digits or blank, followed by -1 thru 2 alphanumeric digits or blank, followed by -1 thru 2 alphanumeric digits or blank, followed by -1 thru 2 alphanumeric digits or blank.

**Connectors**, Model(s) TS2016WNV followed by -10, followed by 1 thru 2 alphanumeric digits or blank, followed by 1 thru 2 alphanumeric digits or blank, followed by -1 thru 2 alphanumeric digits or blank, followed by 1 thru 2 alphanumeric digits or blank, followed by 1 thru 2 alphanumeric digits or blank, followed by -1 thru 2 alphanumeric digits or blank, followed by -1 thru 2 alphanumeric digits or blank, followed by -1 thru 2 alphanumeric digits or blank, followed by -1 thru 2 alphanumeric digits or blank, followed by -1 thru 2 alphanumeric digits or blank, followed by -1 thru 2 alphanumeric digits or blank, followed by -1 thru 2 alphanumeric digits or blank, followed by -1 thru 2 alphanumeric digits or blank.

**Connectors**, Model(s) TU or TF, followed by 5012HNO, followed by 2 through 28 or 02 through 09, may be followed by P, followed by L, N or Y, followed by T or E, followed by 2, 4, 6 or 8, followed by A or AE or GO, followed by two alphanumerical digits, may be followed by 1 through 15 alphanumeric code

**Connectors**, Model(s) TU or TF, followed by 6012HNO, followed by 2 through 25 or 02 through 09, may be followed by P, followed by L, N or Y, followed by T or E, followed by 0, 2, 4, 6 or 8, followed by A or AE or GO, followed by two alphanumerical digits, may be followed by 1 through 15 alphanumeric code

**Connectors**, Model(s) TU1001HNO, followed by 1X, followed by 02 through 15 or 20, may be followed by P, may be followed by 1 through 15 alphanumeric code

**Connectors**, Model(s) TU1001HNO, followed by 2X, followed by 10, 15, 20 or 25, may be followed by P, may be followed by 1 through 15 alphanumeric code

**Connectors**, Model(s) TU1001WNV and TU1001WNR, followed by 1X, followed by 02 through 15 or 20, may be followed by PS or S, may be followed by 1 through 15 alphanumeric code

**Connectors**, Model(s) TU1001WNV, followed by 2X10, 2X15, 2X20 or 2X25, may be followed by PS, S, SB or PSB, may be followed by 1 through 15 alphanumeric code

**Connectors**, Model(s) TU1003HNO, followed by 1X14, 1X20, 1X30 14, 20 or 30, may be followed by P, may be followed by 1 through 15 alphanumeric code

**Connectors**, Model(s) TU1003WNR, followed by 1X14, 1X20 or 1X30, 14, 20 or 30, may be followed by PS, S, SI or PSI, may be followed by 1 through 15 alphanumeric code

**Connectors**, Model(s) TU1007HNO, followed by 08, 14, 20 or 30, may be followed by P, B or PB, may be followed by 1 through 15 alphanumeric code

**Connectors**, Model(s) TU1007WNR, followed by 08, 14, 20 or 30, may be followed by P, followed by SB or SIB, may be followed by 1 through 15 alphanumeric code

**Connectors**, Model(s) TU1202HNO followed by -02 thru -12, followed by -M0, followed by one thru thirty alphanumeric digits or blank.

**Connectors**, Model(s) TU1202HNO, followed by -02K thru -12K, followed by one thru thirty alphanumeric digits or blank.

**Connectors**, Model(s) TU1202HNO, followed by -04, followed by one thru thirty alphanumeric digits or blank.

**Connectors**, Model(s) TU1202HNO, followed by -06B thru -09B, followed by one thru thirty alphanumeric digits or blank.

**Connectors**, Model(s) TU1202HNO-06A followed by one thru thirty alphanumeric digits or blank.

**Connectors**, Model(s) TU1202W, followed by N or G, followed by V, followed by -02 thru -12, followed by 00 or 02, followed by 01H16.

**Connectors**, Model(s) TU1202W, followed by N or G, followed by V, followed by -02 thru -12, followed by SA, followed by two alphanumeric digits or blank, followed by one thru thirty alphanumeric digits or blank.

**Connectors**, Model(s) TU1202W, followed by N or G, followed by V, followed by -04, followed by 0001H17.

**Connectors**, Model(s) TU1202W, followed by N or G, followed by V, followed by -04BA, followed by two alphanumeric digits or blank, followed by one thru thirty alphanumeric digits or blank.

**Connectors**, Model(s) TU1212HNO, followed by 2 through 30 or 02 through 09, may be followed by P, may be followed by 1 through 15 alphanumeric code

**Connectors**, Model(s) TU1212WBR, followed by 2 through 30 or 02 through 09, may be followed by PS or S, may be followed by 1 through 15 alphanumeric code

**Connectors**, Model(s) TU1213HNO followed by 2 through 10, 15, 20, 25, 30, 31 or 02 through 09, may be followed by P, may be followed by 1 through 15 alphanumeric code

**Connectors**, Model(s) TU1213WNR and TU1213WNV followed by 21 or 31, followed by PSBD or SBD, may be followed by 1 through 15 alphanumeric code

**Connectors**, Model(s) TU1213WNR and TU1213WNV followed by 5, 7, 9, 05, 07, 09, 11, 13, 15, 17, 19, 21 or 31, followed by PSD or SD , may be followed by 1 through 15 alphanumeric code

**Connectors**, Model(s) TU1213WNR followed by 2 through 10, 15, 20, 25, 30, 31 or 02 through 09, may be followed by PS or S, may be followed by 1 through 15 alphanumeric code

**Connectors**, Model(s) TU1213WNR followed by 20 or 30, may be followed by PSB, SB, SIB or PSIB, may be followed by 1 through 15 alphanumeric code

**Connectors**, Model(s) TU1217HNO, followed by 2 through 10, 12, 20, 25, 30 or 02 through 09, may be followed by P, may be followed by 1 through 15 alphanumeric code

**Connectors**, Model(s) TU1252, followed by HNO, followed by 2 through 15 or 02 through 09, may be followed by P, may be followed by 1 through 15 alphanumeric code

**Connectors**, Model(s) TU1252, followed by WNR or WNV, followed by 2 through 15 or 02 through 09, may be followed by P or PS or S, may be followed by 1 through 15 alphanumeric code

**Connectors**, Model(s) TU1253, followed by H, HNO, WNR or WNV, followed by 2 through 15 or 02 through 09, may be followed by P, may be followed by 1 through 15 alphanumeric code

**Connectors**, Model(s) TU1257, followed by HNO, may be followed by 2, 1X or 2X, followed by 2 through 15 or 20 or 02 through 09, may be followed by P, may be followed by 1 through 15 alphanumeric code

**Connectors**, Model(s) TU1257, followed by WNR or WNV, may be followed by 1 or 1X followed by 2 through 15 or 20 or 02 through 09, may be followed by P, may be followed by 1 through 15 alphanumeric code

**Connectors**, Model(s) TU1257, followed by WNV, followed by 2 or 2X, followed by 5through 15 or 20 or 05 through 09, may be followed by PS or S, may be followed by 1 through 15 alphanumeric code

**Connectors**, Model(s) TU1501, followed by HNO, WNR or WNV, followed by 2 through 13 or 02 through 09, may be followed by P, may be followed by 1 through 15 alphanumeric code

**Connectors**, Model(s) TU1501WNR and TU1501WNV, followed by 02 thru 13, may be followed by PS or S, may be followed by 1 through 15 alphanumeric code

**Connectors**, Model(s) TU1502HNO and TU1502WNR, followed by 02 or 03, may be followed by P, may be followed by 1 through 15 alphanumeric code

**Connectors**, Model(s) TU1503HNO followed by -03 thru -10, followed by 1 through 30 alphanumeric digits or blank.

**Connectors**, Model(s) TU1503WNR followed by -03 thru -10, followed by S, followed by A, B, C or blank, followed by G or blank, followed by 1 through 30 alphanumeric digits or blank.

**Connectors**, Model(s) TU1513HNO followed by -02 thru -10, followed by blank, "/", "." or 1 through 5 alphanumeric code in parentheses or not.

**Connectors**, Model(s) TU1513WNV followed by -02 thru -10, followed by S, followed by blank, "/", "." or 1 through 5 alphanumeric code in parentheses or not.

**Connectors**, Model(s) TU2001, followed by HNO, WNR or WNV, followed by 2 through 16 or 02 through 09, may be followed by P, may be followed by 1 through 15 alphanumeric code

**Connectors**, Model(s) TU2001WNR and TU2001WNV, followed by 02 thru 16, may be followed by PS or S, may be followed by 1 through 15 alphanumeric code

**Connectors**, Model(s) TU2002, followed by HNO, WNR or WNV, followed by 2 through 15 or 02 through 09, may be followed by P, may be followed by 1 through 15 alphanumeric code

**Connectors**, Model(s) TU2003, followed by HNO, may be followed by 1, 1X, 2 or 2X followed by 2 through 40, or 02 through 09, may be followed by P , may be followed by 1 through 15 alphanumeric code..

**Connectors**, Model(s) TU2003, followed by HNO, may be followed by 2 or 2X, followed by 4 through 40 or 04 through 09, may be followed by PR or R, may be followed by 1 through 15 alphanumeric code.

**Connectors**, Model(s) TU2003, followed by WNR, WNV, WBR or WBV, may be followed by 1, 1X, 2 or 2X, followed by 2 through 40 or 02 through 09, may be followed by P, may be followed by 1 through 15 alphanumeric code.

**Connectors**, Model(s) TU2004, followed by HNO, WNR or WNV, followed by 2 through 15 or 02 through 09, may be followed by P, may be followed by 1 through 15 alphanumeric code

**Connectors**, Model(s) TU2005, followed by HNO, WNR or WNV, followed by 2X, followed by 3 through 16 or 03 through 09, may be followed by P, may be followed by 1 through 15 alphanumeric code

**Connectors**, Model(s) TU2005HNO, TU2005WNV and TU2005WNR, followed by 2X02 thru 2X15, may be followed by PK or K, may be followed by 1 through 15 alphanumeric code

**Connectors**, Model(s) TU2006, followed by HNO or WNR, followed by 2 through 15 or 02 through 09, may be followed by P, may be followed by 1 through 15 alphanumeric code

**Connectors**, Model(s) TU2006, followed by WNV, followed by 2 through 15 or 02 through 09, may be followed by P or PF or F, may be followed by 1 through 15 alphanumeric code

**Connectors**, Model(s) TU2007HNO, TU2007WNV and TU2007WNR, followed by 2X, followed by 2 through 16 or 02 through 09, may be followed by P, may be followed by 1 through 15 alphanumeric code

**Connectors**, Model(s) TU2008HNO, TU2008WNV and TU2008WNR, followed by 02 thru 15, may be followed by P, may be followed by 1 through 15 alphanumeric code

**Connectors**, Model(s) TU2013HNO, followed by -02 thru -07, -11 or -12, followed by blank, "/", "." or 1 through 5 alphanumeric code in parentheses or not.

**Connectors**, Model(s) TU2013HNO-08 followed by blank, "/", "." or 1 through 5 alphanumeric code in parentheses or not.

**Connectors**, Model(s) TU2013HNO-09 followed by blank, "/", "." or 1 through 5 alphanumeric code in parentheses or not.

**Connectors**, Model(s) TU2013HNO-10 followed by blank, "/", "." or 1 through 5 alphanumeric code in parentheses or not.

**Connectors**, Model(s) TU2013WNR, followed by -02 thru -07, -11 or -12, followed by 1 through 2 alphanumeric digits or blank, followed by one alphanumeric digit or blank, followed by 0, 1 or blank, followed by one alphanumeric digit or blank, followed by 1 through 2 alphanumeric digits or blank, followed by 1 through 30 alphanumeric digits or blank.

**Connectors**, Model(s) TU2013WNR, followed by -02 thru -07, -11 or -12, followed by S, followed by 1 through 3 alphanumeric digits or blank, followed by 1 through 3 alphanumeric digits or blank, followed by -M8, -NL or blank, followed by blank, "/", "." or 1 through 3 alphanumeric code in parentheses or not.

**Connectors**, Model(s) TU2013WNR-08 followed by 1 through 2 alphanumeric digits or blank, followed by one alphanumeric digit or blank, followed by 0, 1 or blank, followed by one alphanumeric digit or blank, followed by 1 through 2 alphanumeric digits or blank, followed by 1 through 30 alphanumeric digits or blank.

**Connectors**, Model(s) TU2013WNR-08 followed by S, followed by 1 through 3 alphanumeric digits or blank, followed by 1 through 3 alphanumeric digits or blank, followed by -M8, -NL or blank, followed by blank, "/", "." or 1 through 3 alphanumeric code in parentheses or not.

**Connectors**, Model(s) TU2013WNR-09 followed by 1 through 2 alphanumeric digits or blank, followed by one alphanumeric digit or blank, followed by 0, 1 or blank, followed by one alphanumeric digit or blank, followed by 1 through 2 alphanumeric digits or blank, followed by 1 through 30 alphanumeric digits or blank.

**Connectors**, Model(s) TU2013WNR-09 followed by S, followed by 1 through 3 alphanumeric digits or blank, followed by 1 through 3 alphanumeric digits or blank, followed by -M8, -NL or blank, followed by blank, "/", "." or 1 through 3 alphanumeric code in parentheses or not.

**Connectors**, Model(s) TU2013WNR-10 followed by 1 through 2 alphanumeric digits or blank, followed by one alphanumeric digit or blank, followed by 0, 1 or blank, followed by one alphanumeric digit or blank, followed by 1 through 2 alphanumeric digits or blank, followed by 1 through 30 alphanumeric digits or blank.

**Connectors**, Model(s) TU2013WNR-10 followed by S, followed by 1 through 3 alphanumeric digits or blank, followed by 1 through 3 alphanumeric digits or blank, followed by -M8, -NL or blank, followed by blank, "/", "." or 1 through 3 alphanumeric code in parentheses or not.

**Connectors**, Model(s) TU2019HNO followed by -10, followed by one thru thirty alphanumeric digits or blank.

**Connectors**, Model(s) TU2019W followed by one thru two alphanumeric digits or blank, followed by R, followed by -10, followed by one thru thirty alphanumeric digits or blank, followed by one thru thirty alphanumeric digits or blank, followed by one alphanumeric digit or blank, followed by one thru thirty alphanumeric digits or blank.

**Connectors**, Model(s) TU3001, followed by HNO, WNR or WNV, followed by 2 through 15 or 20, or 02 through 09, may be followed by P, may be followed by 1 through 15 alphanumeric code

**Connectors**, Model(s) TU3002, followed by HNO, WNR or WNV, followed by 2 through 16 or 02 through 09, may be followed by P, may be followed by 1 through 15 alphanumeric code

**Connectors**, Model(s) TU3003, followed by HNO, WNR or WNV, followed by 2 through 15 or 02 through 09, may be followed by P, may be followed by 1 through 15 alphanumeric code

**Connectors**, Model(s) TU3004, followed by HNO, WNR or WNV, followed by 2 through 20 or 02 through 09, may be followed by P, may be followed by 1 through 15 alphanumeric code

**Connectors**, Model(s) TU3005, followed by HNO, WNR or WNV, followed by 2 through 13 or 02 through 09, may be followed by P, may be followed by 1 through 15 alphanumeric code

**Connectors**, Model(s) TU3006, followed by HNO, WNR or WNV, followed by 2 through 20 or 02 through 09, may be followed by P, may be followed by 1 through 15 alphanumeric code

**Connectors**, Model(s) TU3007, followed by HNO, WNR or WNV, followed by 2 through 15 or 02 through 09, may be followed by P, may be followed by 1 through 15 alphanumeric code

**Connectors**, Model(s) TU3008, followed by HNO, WNR or WNV, followed by 2 through 25 or 02 through 09, may be followed by P, may be followed by 1 through 15 alphanumeric code

**Connectors**, Model(s) TU3009HNO and TU3009WNV, followed by 02 thru 15, may be followed by P, may be followed by 1 through 15 alphanumeric code

**Connectors**, Model(s) TU3501HNO-02, may be followed by P, may be followed by 1 through 15 alphanumeric code

**Connectors**, Model(s) TU3501WNR-02, may be followed by PS or S, may be followed by 1 through 15 alphanumeric code

**Connectors**, Model(s) TU4001, followed by HNO, followed by 2 through 5 or 02 through 05, may be followed by P, may be followed by 1 through 15 alphanumeric code

**Connectors**, Model(s) TU4001, followed by WNR, followed by 2 through 5 or 02 through 05, may be followed by P, PS or S, maybe followed by 04, 08 or 12, may be followed by 1 through 15 alphanumeric code

**Connectors**, Model(s) TU5002, followed by HNO, followed by 2 through 20 or 02 through 09, may be followed by P, C or PC, may be followed by 1 through 15 alphanumeric code

**Connectors**, Model(s) TU5002, followed by WNR or WNV, followed by 2 through 20 or 02 through 09, may be followed by P, may be followed by 1 through 15 alphanumeric code

**Connectors**, Model(s) TU5003, followed by HNO, followed by 2 through 12 or 02 through 09, may be followed by P, may be followed by 1 through 15 alphanumeric code

**Connectors**, Model(s) TU5004, followed by HNO, followed by 2 through 6 or 02 through 06, may be followed by P, may be followed by 1 through 15 alphanumeric code

**Connectors**, Model(s) TU5004, followed by WNR or WNV, followed by 2 through 12 or 02 through 09, may be followed by P, may be followed by 1 through 15 alphanumeric code

**Connectors**, Model(s) TU5005, followed by HNO, followed by 2 or 2X, followed by 2 through 40 or 02 through 09, may be followed by P or PR or R, may be followed by 1 through 15 alphanumeric code

**Connectors**, Model(s) TU5005, followed by HNO, may be followed by 1 or 1X, followed by 2 through 40 or 02 through 09, may be followed by P, may be followed by 1 through 15 alphanumeric code

**Connectors**, Model(s) TU5005, followed by HNO, may be followed by 1 or 1X, followed by 4 or 04, followed by PK or K, may be followed by 1 through 15 alphanumeric code

**Connectors**, Model(s) TU5005, followed by WNR, WNV, WBR or WBV, may be followed by 1, 1X 2 or 2X, followed by 2 through 40 or 02 through 09, may be followed by P, may be followed by 1 through 15 alphanumeric code

**Connectors**, Model(s) TU5006, followed by HNO, may be followed by 1 or 1X, followed by 2 through 25 or 02 through 09, may be followed by P, PF, F, K or PK, may be followed by 1 through 15 alphanumeric code

**Connectors**, Model(s) TU5006, followed by WNR or WNV, may be followed by 1 or 1X, followed by 2 through 25 or 02 through 09, may be followed by P, may be followed by 1 through 15 alphanumeric code

**Connectors**, Model(s) TU6001, followed by HNO, WNR or WNV, followed by 2 through 12 or 02 through 09, may be followed by P, may be followed by 1 through 15 alphanumeric code

**Connectors**, Model(s) TU6002, followed by HNO, followed by 2 through 16 or 02 through 09, may be followed by P, may be followed by 1 through 15 alphanumeric code

**Connectors**, Model(s) TU6002, followed by WNR or WNV, followed by 2 through 16 or 02 through 09, may be followed by P, C or PC, may be followed by 1 through 15 alphanumeric code

**Connectors**, Model(s) TU6003HNO, followed by 06, followed by K, followed by 1 through 9 or 01 through 09, may be followed by 1 through 15 alphanumeric code

**Connectors**, Model(s) TU6003WNV, followed by 06 or 12, may be followed by P, F or PF, may be followed by 1 through 15 alphanumeric code

**Connectors**, Model(s) TU6004HNO, followed by 02 through 06, may be followed by P, may be followed by 1 through 15 alphanumeric code

**Connectors**, Model(s) TU6004WNV and TU6004WNR, followed by 02 through 06, may be followed by P, C or PC, may be followed by 1 through 15 alphanumeric code

**Connectors**, Model(s) TU6005HNO, followed by 02 through 09, may be followed by P, may be followed by 1 through 15 alphanumeric code

**Connectors**, Model(s) TU6005WNV and TU6005WNR, followed by 02 through 09, may be followed by P, C or PC, may be followed by 1 through 15 alphanumeric code

**Connectors**, Model(s) TU6007, TU6008, followed by HNO, WBV or WNV, followed by 1 through 6 or 01 through 06, may be followed by P, may be followed by 1 through 15 alphanumeric code

**Connectors**, Model(s) TY1081HNO, followed by 1, 2, 3, 1X, 2X or 3X, followed by 1 through 5 or 01 through 05, may be followed by P, may be followed by 1 through 15 alphanumeric code

**Connectors**, Model(s) TY1082HNO, followed by 1, 2, 3, 1X, 2X or 3X, followed by 1 through 5 or 01 through 05, may be followed by P, PW or W, may be followed by 1 through 15 alphanumeric code

**Connectors**, Model(s) TY1252HNO, followed by 02 through 10, may be followed by P, may be followed by 1 through 15 alphanumeric code

**Connectors**, Model(s) TY1381, followed by HNO followed by 2, 3, 4, 6, 9, 12, 15, 02, 03, 04, 06, 09, 1X02, 1X03, 1X04, 2X2, 2X02, 2X03, 3X03, 3X04 or 3X05, may be followed by P, may be followed by 1 through 15 alphanumeric code

**Connectors**, Model(s) TY1382, followed by HNO followed by 2 1X02, 2x2 or 2X02, may be followed by P, may be followed by 1 through 15 alphanumeric code

**Connectors**, Model(s) TY1382, followed by HNO followed by 2, 3, 4, 6, 9, 12, 15, 02, 03, 04, 06, 09, 1X02, 1X03, 1X04, 2X2, 2X02, 2X03, 3X03, 3X04 or 3X05, followed by PW or W, may be followed by 1 through 15 alphanumeric code

**Connectors**, Model(s) TY1501HNO, followed by 02 thru 13, may be followed by P, may be followed by 1 through 15 alphanumeric code

**Connectors**, Model(s) TY1581, followed by HNO followed by 2, 3, 4, 6, 9, 12, 15, 02, 03, 04, 06, 09, 1X02, 1X03, 1X04, 2X03, 3X03, 3X04 or 3x05, followed by PL or L, may be followed by 1 through 15 alphanumeric code

**Connectors**, Model(s) TY1581, TY1582, followed by HNO followed by 1, 2, 3, 4, 5, 6, 9, 12, 15, 01, 02, 03, 04, 05, 06, 09, 1X01, 1X02, 1X03, 1X04, 1X05, 2X2, 2X02, 2X03, 3X03, 3X04 or 3X05, may be followed by P, W or PW, may be followed by 1 through 15 alphanumeric code

**Connectors**, Model(s) TY1582, followed by HNO followed by 2, 3, 4, 6, 9, 12, 15, 02, 03, 04, 1X02, 1X03, 1X04, 2X03, 3X03, 3X04 or 3x05, followed by PL, L, LW or PLW, may be followed by 1 through 15 alphanumeric code

**Connectors**, Model(s) TY2081, followed by HNO followed by 1, 2, 3, 4, 6, 9, 12, 15, 01, 02, 03, 04, 06, 09, 1X01, 1X02, 1X03, 1X04, 2X2, 2X02, 2X03, 3X03, 3X04 or 3X05, may be followed by P, may be followed by 1 through 15 alphanumeric code

**Connectors**, Model(s) TY2082, followed by HNO followed by 1, 2, 3, 4, 6, 9, 12,15, 01, 02, 03, 04, 06, 09, 1X01, 1X02, 1X03, 1X04, 2X2, 2X02, 2X03, 3X03, 3X04 or 3X05, may be followed by P, W or PW, may be followed by 1 through 15 alphanumeric code

**Connectors**, Model(s) TY2083, TY2084, followed by HNO, followed by 2 through 10 or 02 through 09, may be followed by P, may be followed by 1 through 15 alphanumeric code

**Connectors**, Model(s) TY2361, followed by HNO, followed by 1X1, 1X2, 1X3, 1X4, 1X5, 2X2, 2X3, 3X3, 3X4, 3X5, 1X01, 1X02, 1X03, 1X04, 1X05, 2X02, 2X03, 3X03, 3X04 or 3X05, followed by PL or L, may be followed by 1 through 15 alphanumeric code

**Connectors**, Model(s) TY2361, TY2362, followed by HNO, followed by 1X1, 1X2, 1X3, 1X4, 1X5, 2X2, 2X3, 3X3, 3X4, 3X5, 1X01, 1X02, 1X03, 1X04, 1X05, 2X02, 2X03, 3X03, 3X04 or 3X05, may be followed by P, W or PW, may be followed by 1 through 15 alphanumeric code

**Connectors**, Model(s) TY2362, followed by HNO, followed by 1X1, 1X2, 1X3, 1X4, 2X3, 3X3, 3X4, 3X5, 1X01, 1X02, 1X03, 1X04, 2X03, 3X03, 3X04 or 3X05, followed by PL, L, LW or PLW, may be followed by 1 through 15 alphanumeric code

**Connectors**, Model(s) TY3081, TY3082, followed by HNO, followed by 2 through 12 or 02 through 09, may be followed by P, PW or W, may be followed by 1 through 15 alphanumeric code

**Connectors**, Model(s) TY3083, followed by HNO, followed by 2 through 20 or 02 through 09, may be followed by P, may be followed by 1 through 15 alphanumeric code

**Connectors**, Model(s) TY3084, followed by HNO, followed by 2 through 12 or 02 through 09, may be followed by P, may be followed by 1 through 15 alphanumeric code

**Connectors**, Model(s) TY3085HNO followed by -1x02 thru -1x12, followed by C, E or blank, followed by 1 through 30 alphanumeric digits or blank.

**Connectors**, Model(s) TY3085HNO followed by -2x01 thru -2x12, followed by D, E or blank, followed by 1 through 30 alphanumeric digits or blank.

**Connectors**, Model(s) TY3085HNO, followed by 1X02 thru 1X12 or 2X01 thru 2X12, may be followed by P, may be followed by 1 through 15 alphanumeric code

**Connectors**, Model(s) TY3086HNO followed by -1x02 thru -1x12, followed by C or blank, followed by 1 through 30 alphanumeric digits or blank.

**Connectors**, Model(s) TY3086HNO followed by -2x01 thru -2x12, followed by C or blank, followed by 1 through 30 alphanumeric digits or blank.

**Connectors**, Model(s) TY3086HNO, followed by 1X02 thru 1X12 or 2X01 thru 2X12, may be followed by P, W or PW, may be followed by 1 through 15 alphanumeric code

**Connectors**, Model(s) TY3086WNR followed by -1x02 thru -1x12, followed by 1 or 2, followed by F, followed by -0 thru -5, -A thru -F, -N or -P, followed by 1 through 30 alphanumeric digits or blank.

**Connectors**, Model(s) TY3086WNR followed by -1x02 thru -1x12, followed by 5, followed by 0, followed by -0 thru -5, -A thru -F, -N or -P, followed by 1 through 30 alphanumeric digits or blank.

**Connectors**, Model(s) TY3086WNR followed by -1x02 thru -1x12, followed by S, followed by -GO, -G3, -G5, -G10, -G15, -G30, -AC, -AC100, -AC150, -AE, -AE100, -AE150, -GOAC or -G15AC, followed by 1 through 30 alphanumeric digits or blank.

**Connectors**, Model(s) TY3086WNR followed by -2x01 thru -2x12, followed by 1 or 2, followed by F, followed by -0 thru -5, -A thru -F, -N or -P, followed by 1 through 30 alphanumeric digits or blank.

**Connectors**, Model(s) TY3086WNR followed by -2x01 thru -2x12, followed by 5, followed by 0, followed by -0 thru -5, -A thru -F, -N or -P, followed by 1 through 30 alphanumeric digits or blank.

**Connectors**, Model(s) TY3086WNR, followed by -2x01 thru -2x12, followed by F or S, followed by -GO, -G3, -G5, -G10, -G15, -G30, -AC, -AC100, -AC150, -AE, -AE100, -AE150, -GOAC or -G15AC, followed by 1 through 30 alphanumeric digits or blank.

**Connectors**, Model(s) TY3086WNR, followed by 1X02 thru 1X12, may be followed by PF, PS, F, S, SF or PSF, may be followed by 1 through 15 alphanumeric code

**Connectors**, Model(s) TY3086WNR, followed by 2X01 thru 2X12, followed by PF, PS, F, S, SE or PSE, may be followed by 1 through 15 alphanumeric code

**Connectors**, Model(s) TY3086WNV followed by -1x02 thru -1x12, followed by 1 or 4, followed by 0, followed by -0 thru -5, -A thru -F, -N or -P, followed by 1 through 30 alphanumeric digits or blank.

**Connectors**, Model(s) TY3086WNV followed by -1x02 thru -1x12, followed by S, followed by -GO, -G3, -G5, -G10, -G15, -G30, -AC, -AC100, -AC150, -AE, -AE100, -AE150, -GOAC or -G15AC, followed by 1 through 30 alphanumeric digits or blank.

**Connectors**, Model(s) TY3086WNV followed by -2x01 thru -2x12, followed by 1 or 4, followed by 0, followed by -0 thru -5, -A thru -F, -N or -P, followed by 1 through 30 alphanumeric digits or blank.

**Connectors**, Model(s) TY3086WNV followed by -2x01 thru -2x12, followed by S or blank, followed by -GO, -G3, -G5, -G10, -G15, -G30, -AC, -AC100, -AC150, -AE, -AE100, -AE150, -GOAC or -G15AC, followed by 1 through 30 alphanumeric digits or blank.

**Connectors**, Model(s) TY3086WNV, followed by 1X02 thru 1X12 or 2X01 thru 2X12, may be followed by P, PS, F, S, SE or PSE, may be followed by 1 through 15 alphanumeric code

**Connectors**, Model(s) TY3501HNO-02, may be followed by P, may be followed by 1 through 15 alphanumeric code

**Connectors**, Model(s) TY4001HNO, followed by 02 thru 05, may be followed by P, may be followed by 1 through 15 alphanumeric code

**Connectors**, Model(s) TY4281, followed by HNO, followed by 2x or 2X, followed by 1 through 12 or 01 through 09, may be followed by P, may be followed by 1 through 15 alphanumeric code

**Connectors**, Model(s) TY4282, followed by HNO, followed by 2x or 2X followed by 1 through 12 or 01 through 09, may be followed by P, W or PW, may be followed by 1 through 15 alphanumeric code

**Connectors**, Model(s) TY5006HNO, followed by 1X02 thru 1X12, may be followed by P, may be followed by 1 through 15 alphanumeric code

**Connectors**, Model(s) TY5083HNO-03, may be followed by P, may be followed by 1 through 15 alphanumeric code

**Connectors**, Model(s) TY5084HNO-03, followed by PA or A, may be followed by 1 through 15 alphanumeric code

**Connectors**, Model(s) TY5084HNO-03, may be followed by P, may be followed by 1 through 15 alphanumeric code

**Connectors**, Model(s) TY5085HNO-02, may be followed by P, may be followed by 1 through 15 alphanumeric code

**Connectors**, Model(s) TY5086HNO-02, may be followed by P, may be followed by 1 through 15 alphanumeric code

**Connectors**, Model(s) TY6351HNO and TY6352HNO, followed by 1X1, 1X2, 1X3, 1X4, 2X3, 3X3, 3X4, 3X5, 1X01, 1X02, 1X03, 1X04, 2X03, 3X03, 3X04 or 3X05, may be followed by P, may be followed by 1 through 15 alphanumeric code

**Connectors**, Model(s) TY8081, TY8082, followed by HNO, followed by 4 or 04, may be followed by P, may be followed by 1 through 15 alphanumeric code

**Connectors**, Model(s) TY8082, followed by WNR or WNV, followed by 4 or 04, may be followed by R, may be followed by 1 through 15 alphanumeric code

Model(s) Cat. No. TL3060WNV, followed by 2X02, followed by one thru thirty alphanumeric digits or blank.

Model(s) Cat. No. TU2015HNO, followed by -04 thru -12, followed by one thru thirty alphanumeric digits or blank.

Model(s) Cat. No. TU2015WGR, followed by -04 thru -12, followed by one thru thirty alphanumeric digits or blank.

Model(s) TP1251P followed by one alphanumeric digit or blank, followed by P, followed by -2X08, followed by one alphanumeric digit or blank, followed by one alphanumeric digit or blank, followed by one alphanumeric digit or blank, followed by one thru two alphanumeric digits or blank, followed by one thru thirty alphanumeric digits or blank.

Model(s) TP1251R followed by one alphanumeric digit or blank, followed by P, followed by -2X08, followed by one alphanumeric digit or blank, followed by one alphanumeric digit or blank, followed by one alphanumeric digit or blank, followed by one thru two alphanumeric digits or blank, followed by one thru thirty alphanumeric digits or blank.

Model(s) TS2016HNO, followed by -10, followed by -1 through -30 alphanumeric digits or blank.

Model(s) TS2016WNV, followed by -10, followed by 5, followed by 1 through 30 alphanumeric digits or blank, followed by -1 through -30 alphanumeric digits or blank, followed by 1 through 30 alphanumeric digits or blank, followed by 1 through 30 alphanumeric digits or blank, followed by 1 through 30 alphanumeric digits or blank.

Marking: Company name or tradename "TYU" and model designation on the device or carton.

Last Updated on 2020-02-19

---

在此資料庫中出現的公司名稱或產品，並不代表其產品本身的製造有經過UL 後續檢驗服務的把關。僅有附 UL 標誌的產品才可被視為取得認證，並涵蓋在UL 後續檢驗服務範疇裡。請務必確認產品上是否有此標誌。

UL 允許複製線上認證目錄中所包含的資料，但必須符合以下條件：1.指南資訊、零組件、構造、設計、系統和/或認證 (檔案) 必須以完整的方式呈現，且不得誤導、不得操弄這些資料 (或圖繪) 。2.「經 UL 許可自線上認證目錄轉載」的聲明，必須顯示在擷取的資料旁。此外，轉載的資料必須包含以下格式的版權聲明： "© 2020 UL LLC"