

設計驗證
工程課
2025 -10- 31
發行

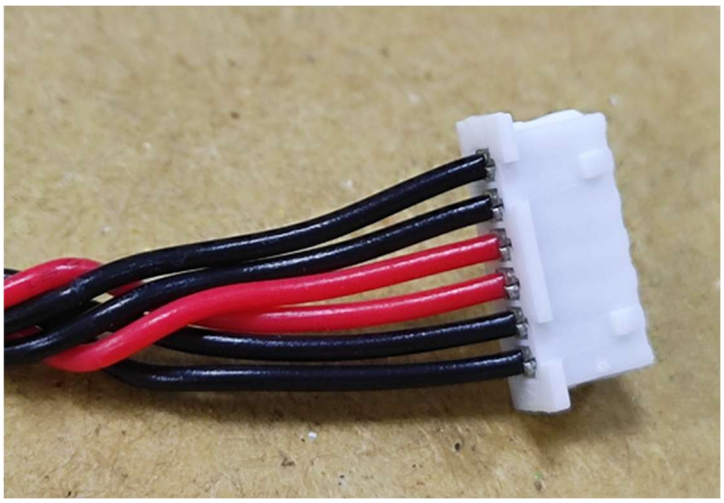

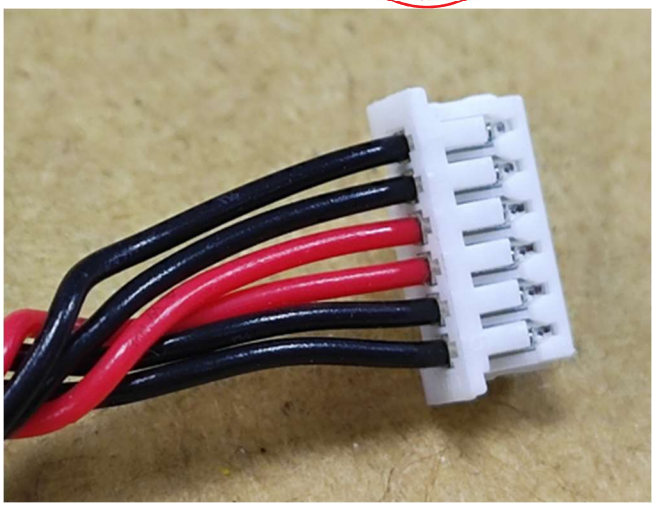

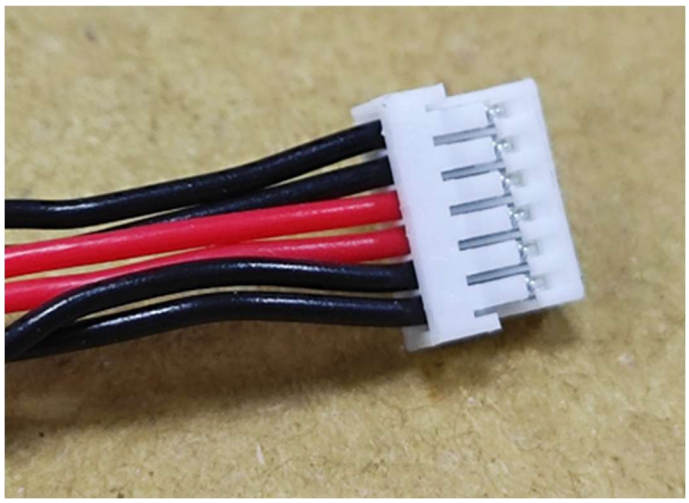

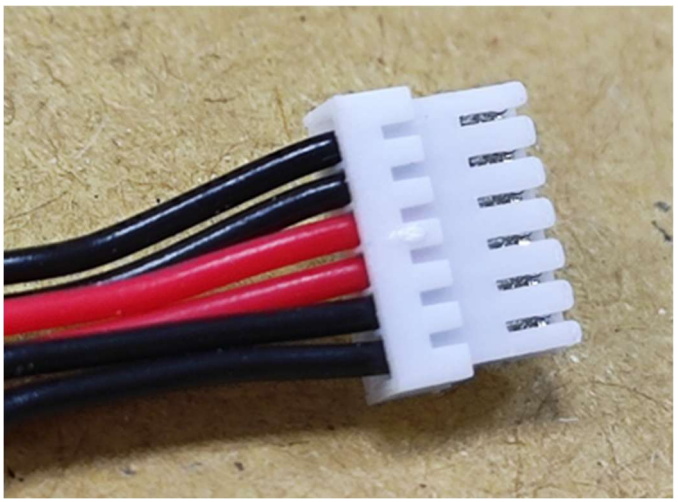

Xya 新亚
Electric Communication

SPECIFICATION FOR APPROVAL

承認書

客户名称 Customer Name	钰纬科技
产品描述 Description	H WIRE*6 (CI1406S000A&1252HNO-6P,600mm)UL1061#30
客户料号 Customer P/N	3KH00009717(K0100)
机种 Model	
新亚料号 Xya P/N	X24JGW-3302-P
制作 Designed by	彭权
审核 Checked by	汪小龙
核准 Approved by	孙玉宝

設計驗證
工程課
2025 -10- 31
發行
钰纬科技開發股份有限公司

客户确认 CUSTOMER SIGNATURE		
制作 Prepared By	审核 Checked By	核准 Approved By

请签字确认回签。
PLEASE RETURN TO US ONE COPY OF SPECIFICATION FOR APPROVAL WITH YOUR APPROVED SIGNATURES.

SUZHOU XINYA ELECTRIC COMMUNICATION CO.,LTD
苏州新亚电通股份有限公司
3205000117784

苏州新亚电通股份有限公司
SUZHOU XINYA ELECTRIC COMMUNICATION CO., LTD.

单重： 克	HARNESS图号DRAWING NO. H3302F
整绞： 圈	

版本 REV.	日 期 DATE	变更单号 ECO NO.	变更内容 DESCRIPTION	制图 DRAWN
⚠2	2025-04-21		变更电线	ZZ

红 磷

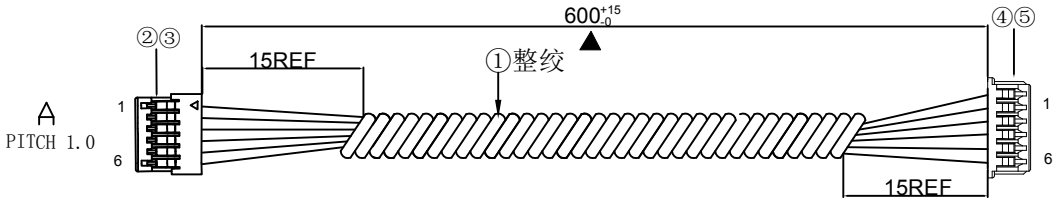

設計驗證
工程課
2025 -10- 31
發行

打▲的为重点检测尺寸

1	UL 1061 #30	黑	650±2	1.5	1.5	1
2	UL 1061 #30	黑	650±2	1.5	1.5	2
3	UL 1061 #30	红	650±2	1.5	1.5	3
4	UL 1061 #30	红	650±2	1.5	1.5	4
5	UL 1061 #30	黑	650±2	1.5	1.5	5
6	UL 1061 #30	黑	650±2	1.5	1.5	6
A	线 规 SPEC.	颜色 COLOR	开线 CUT	A	B	B
				剥头 PEEL		

序号 NO.	料 号 PART NO.	数 量 Q'TY	材 料 MATERIAL	厂商 VENDOR
⑤	D1251-06P-*-HF	1	HOUSING: D1251-06P-X-HF/11251H00-6P-HF/TU1252HN0-6P	XINYA/JCTC/TYU
④	D1251-TOP.VA-*	6	TERMINAL:D1251-TOP.VA-X /11251TOP-2E-C/TU1252TPO-A	XINYA/JCTC/TYU
③	D1004-06P-*-HF	1	HOUSING:无卤无红磷D1004-06P-X-HF/CI1406S000A-NH	XINYA/CviLUX/EQUIV
②	D1004-TOP.VA-*	6	TERMINAL:D1004-TOP.VA-X/CI14T011PEO	XINYA/CviLUX/EQUIV
①	00S1061-30*0Z-*	6	WIRE: 无DOP无红磷UL1061 #30(7/0.10)OD=0.8 VW-1	XINYA/HM

⚠

苏州新亚电通股份有限公司
SUZHOU XINYA ELECTRIC COMMUNICATION Co.,LTD.

制表 (DR.)	校对 (COL.)	审核 (CHK.)	核准 (APPD.)	通用公差 GENERL TOLERANCE		料号 PART NO.	X24JGW-3302-P	客户 CUSTOMER	钰纬科技	版本 REV.	2
张 2025-04-21 抽				X.±0.50	X.°±3°	客户料号 CUTM.NO.	3KH00009717 (K0100)	第1版 (OR.D.)	2024.11.28	页次 SHEET	1/1
				.X±0.30	.X°±1°	机种号 MODEL.NO.		比例：无 SCALE: FREE		单位 UNITS	MM

版本 REV.	日 期 DATE	变更单号 ECO NO.	变更内容 DESCRIPTION	制图 DRAWN

HARNESS图号DRAWING NO.

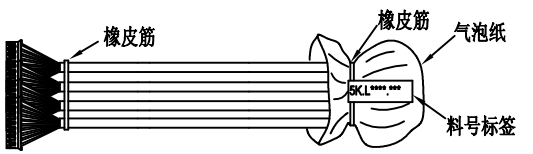

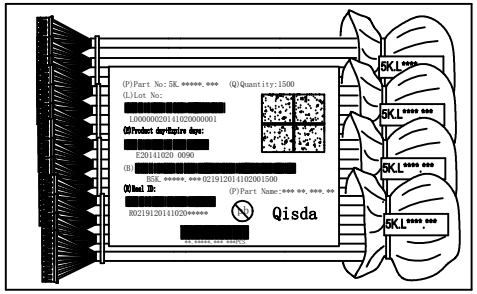

附图A：

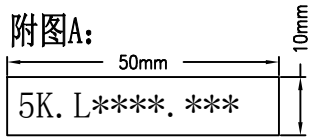

附图B：

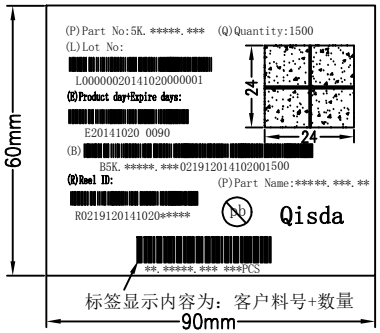

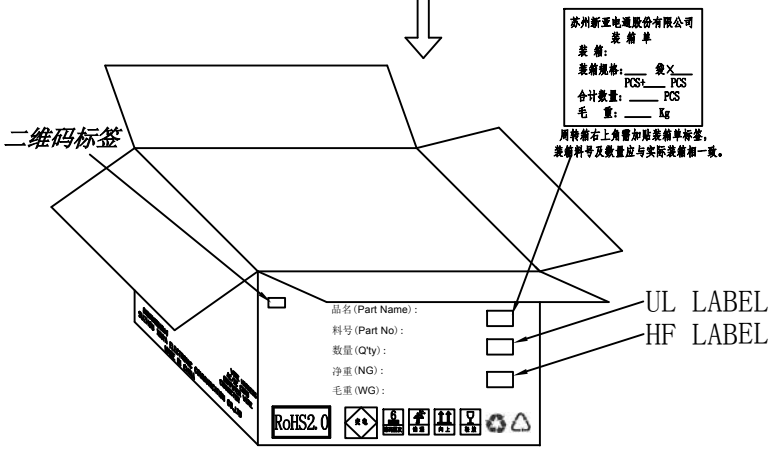

附图C：

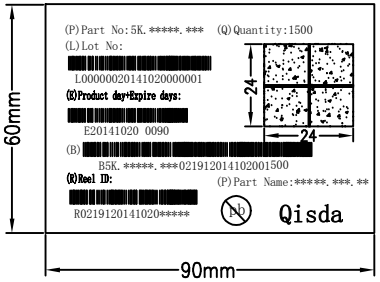

备注：

1 每***PCS用橡皮筋扎成一扎，加贴一料号标签(见附图A),有气泡袋包扎的料号标签贴在气泡袋上，无气泡袋包扎的料号标签贴在线体上。

2 如遇过板端子、磁环等易损构件，每扎包装时须加气泡纸。

3 将每扎产品依次装入一PE袋,PE袋上需加贴二维码标签(见附图B)。

4 箱体外必须贴上UL标签及二维码标签(见附图C)**(无卤料需加贴“HF”标签)**

5 外箱单重的信息，需要填写在对应位置上，书写工整，不可随意书写。

6 箱子不得有破损，用胶带密封好，且注意不可重压。。

	制 表 (DR.)	校 对 (COL.)	审 核 (CHK.)	核 准 (APPD.)	通用公差 GENERL TOLERANCE		料 号 PART NO.	LCD GP料包装图	客 户 CUSTOMER	佳世达	版 本 REV.	1
苏州新亚电通股份有限公司 SUZHOU XINYA ELECTRIC COMMUNICATION Co.,LTD.	范 2022-10-11 唯浩				X.±0.50	X.°±3°	客户料号 CUTM. NO.	–	第1版 (OR.D.)	2022.10.11	页 次 SHEET	1/1
					.X±0.30	.X°±1°	机种号 MODEL. NO.	–	比例：无 SCALE: FREE		单 位 UNITS	MM

苏州新亚电通股份有限公司

类　　别	料号编码原则 [线束成品料号编列]	文件编号	X001
工作指导书		机密等级	■ 机密 □ 一般
		版　　次	A
		页　　次	1 / 2

线束成品料号编列：

S □□ □ □□-□□□□-□□-□□-□□

1 2 3 4 5 6 7 8

1、销售模式码：S=外销(保税)　X=内销(非保税)

2、年度码：8 代表 2008 年开发的料件，16 代表 2016 年开发的料件

3、产品类别码：

A	镀锡FFC(扁铜线)		B	镀金FFC(扁铜线)
C	咪头		E	机外线(注塑成型类)
G	隔离线		H	一端HOUSING，一端沾锡
I	IDC类		J	两端HOUSING类单线
K	镀锡FFC(圆铜线)		L	Wire Harness LVDS
M	一端HOUSING，一端电源插头		N	NB CABLE
P	FPC		Q	原材料类
R	FFC G-TYPE		S	MINI SAS
T	外接端子类		V	Wire Harness排线类
W	Only Wire		Y	Wire Harness刺破式类

4、客户别码：详见客户识别码索引表

5、流水码：从 0001~9999，一个循环结束后，再从 0001~9999

6、特殊料件识别码：

无特殊要求时为空

产品类别码(Table 2)

C	FFC小线冲型类		CL	FFC LVDS冲型类
CV	FFC冲型+HOT-bar类		CF	FFC反折Pin冲型类
F	FFC反折Pin类		L	FFC LVDS类(无冲型、HOT-bar)
LF	FFC LVDS反折Pin类		VF	FFC HOT-bar反折Pin类
V	HOT-bar类		VL	FFC LVDS(HOT-bar类)
TSD	复杂的汽车线(2个以上组件)		TSE	简单的汽车线(2个组件)
ASD	复杂的组合线(2个以上组件，且非汽车线)		ASE	简单的组合线(2个组件，且非汽车线)
CD	低单价线束			

7、环保料件识别码：

HF	无卤类		Z	无DOP类
HZ	无卤、无DOP类		P	无红磷类
HP	无卤、无红磷类			

8、产品交货地点码：

正常此码省略

当同一个料号出不同产地时，增加产地后缀码，详细见客户识别码索引表

除先锋产品出海外，后缀增加“-E”以示区分

先锋产品出海外，后缀增加“-X”，切记，不是“-*”

若产品交往海外的不同地点国家，在”-E”和 ”-X”前增加 2 码地点码，

如” –HL-E”(出海外，交往荷兰)、” –BL-E”(出海外，交往波兰)

详见客户识别码索引表

苏州新亚电通股份有限公司

PRODUCTION NAME：WIRE HARNESS			
Designed：Jodie	APVD：Aviv	Edition：D	File Name：ML1001
		DATE：2019.07.01	Page：1/8

1. SCOPE 应用范围

This product specification contains the test method, the general performance and requirement for Flexible Flat Cable system.

2. REQUIREMENTS 必要条件

2.1. DESIGN AND CONSTRUCTION 设计规范

Product shall be of the design, construction and physical dimensions specified on the applicable product drawing

2.2. MATERIALS 材质

A、Housing：见零件规格书

B、Terminal：见零件规格书

C、Wire：见零件规格书

2.3. Wire RATINGS 线材规格

A、见零件规格书

3.Standard of Confidence Test 信赖性测试

3.1 TEST ENVIRONMENT 测试条件

A. Environment Temperature: 15~35℃

B. Humidity: 45~75%

3.2.TEST REQUIREMENTS AND PROCEDURES SUMMARY

PRODUCTION NAME：WIRE HARNESS			
Designed：Jodie	APVD：Aviv	Edition：D	File Name：ML1001
		DATE：2019.07.01	Page：2/8

Items 测试项目		Test conditions 测试条件	Criteria 判定标准
1	Appearance inspection 外观检查	1、without mechanical injure、deformation、denude 2、Connection terminal should be shining， no oxidization and scoring	PASS
ELECTRICAL 电气特性			
1	Contact Resistance 接触阻抗	20mV/10mA	Less than 20mΩ
2	Insulation Resistance 绝缘阻抗	DC500V /1min	More than 100MΩ
3	Dielectric Withstanding Voltage 耐电压	AC250V/0.5mA 1min	No breakdown
4	Continuity Test 导通测试	Continuity performance should be good， without short、wrong order	No Withoutshort wrong order
MECHANICAL 机械特性			
5	Terminal crimp tensile strength 抗张强度	Terminal crimp tensile strength (Excluding insulation of wire)：	Figure 1
6	Pull-out Test 插拔测试	With the corresponding conn is inserted in the 25± 3mm/min	Figure 2
7	Mechanical life 机械寿命	Insertion and withdrawal 50 times with speed of 100 times/ hour	More than 50 cycle
8	Plating Thickness Test 膜厚测试	Coating Thickness Tester	NA

ENVIRONMENTAL 环境特性			
9	Heat Resistance 耐高温	At the temperature of high temperature test box 85±2℃ is placed in a 96±1H，1H recovery room temperature after detection	PASS
10	Low temperature resistance 耐低温性	At the temperature of high temperature test box -25±2℃ is placed in a 96±1H，1H recovery room temperature after detection	PASS
11	Heat Cycle Test 冷热循环	The 1 cycles：-25℃~+25℃~+85℃~+25℃，5 consecutive cycles，1H recovery room temperature after detection	PASS
12	Humidity 恒温恒湿	Test temperature of 40 degrees, humidity 90～95%RH，the time of 96±1H，1H recovery room temperature after detection	PASS
13	Vibration Test 振动测试	Frequency：50HZ，Swing：1.52mm，each of X, Y, Z-axis directions for 12cycles，and every30 mins	The external appearance have no injury，onnection part has no loose or break
14	Salt Spray 盐雾试验	Temperature：35 ±2℃ Salt solution：5 ±1% Duration：16±1h (After the test，salt deposit shall be removed in running water) 符合国标 GB6461-2002 7 级判断标准	PASS
15	Characteristics 特性阻抗	The type of the equipment：DCA-J 86100C Test standard：NA	NA

4. Direction For Use 产品使用说明

4.1 保质期：包装好的产品在 20±10℃、:70%RH 湿度以下的环境中，可以储存 6 个月

4.2 该产品只适用开发段所对应机种/机型使用需求，不可以作为其它用途使用。若客户端延用到其它机种/机型，则需要向新亚确认是否能继续延用，若因没有通知新亚评估直接使用到其它机种/机型所造成的异常损失，苏州新亚电通有限公司不承担相应的异常责任

4.3 该产品符合制造国(中国)的法律法规要求，同时符合客户在开发段提供的交换目的国法律法规要求，若客户更改交换目的国，需要书面通知新亚，新亚评估是否符合对应国的法律法规要求，若客户在开发段不给予交换目的国的信息，则默认符合制造国的法律法规要求即可，若客户变更交换目的国没有书面通知苏州新亚，苏州新亚电通有限公司不承担因此造成的异常责任

PRODUCTION NAME：WIRE HARNESS			
Designed：Jodie	APVD：Aviv	Edition：D	File Name：ML1001
		DATE：2019.07.01	Page：5/8

Figure 1

导体规格	导体截面积	抗张强度判定标准
34#	0.02㎜²	＞0.3Kg
32#	0.03㎜²	＞0.5Kg
30#	0.05㎜²	＞1.2Kg
28#	0.08㎜²	＞1.5Kg
26#	0.13㎜²	＞2.5Kg
24#	0.21㎜²	＞4.0Kg
22#	0.33㎜²	＞5.0Kg
20#	0.5～0.55㎜²	＞7.0Kg
18#	0.82～1.0㎜²	＞10.0Kg
16#	1.3～1.5㎜²	＞15.0Kg
14#	2.0～2.5㎜²	＞17.0Kg
12#	3.3～4.0㎜²	＞22.0Kg
10#	5.3～6.0㎜²	＞33.0Kg
8#	8.3～9.0㎜²	＞40.0Kg
6#	13.3～14.0㎜²	＞44.5Kg
4#	21.1～21.5㎜²	＞62.3Kg
3#	26.6～26.8㎜²	＞71.2Kg
2#	33.6～33.8㎜²	＞80.1Kg
1#	42.4～42.7㎜²	＞89.0Kg

Figure 2

Items 测试项目	**Test conditions 测试条件**	**Criteria 判定标准**
Insertion force 插入力	With the corresponding conn is inserted in the 25±3mm/min	A端≤3.0Kg B端≤3.0Kg
Pullout force 拔出力		0.5Kg≤A端≤2.0Kg 0.5Kg≤B端≤2.0Kg

PRODUCTION NAME：WIRE HARNESS			
Designed：Jodie	APVD：Aviv	Edition：D	File Name：ML1001
		DATE：2019.07.01	Page：6/8

线束使用注意事项

Wire Harness using Notes and Operation manual

由于线束产品的特殊性，在使用时，不正确的插入和拔出会使其端子易变形甚至可以导致产品功能失效，所以，线束产品在使用上要特别注意以下事项：

Due to the particularity of harness products, when in the using, Incorrect insertion and Pull out of the terminal is easy to deformation , even can to be lead to product function failure, so, Harness products in use should pay special attention to the following matters:

◆普通 LCD 线束/General LCD harness ：

1，在连接的 wafer 上插拔时，要水平向内插入。插入 housing 时需要捏住 housing 的底部或者距离线缆的 1-2mm 处水平的插入；不得向上、向下或者倾斜插拔，这样会使 housing PIN 口变形和端子功能区变形、扩孔。

When connecting to the wafer insertion and Pull out, need to Horizontal into insertion. When Insert housing you need to hold the bottom of the housing or distance in the cable 1-2mm location Horizontal into insertion, don’ t take up、take down or Tilt the insertion and Pull out, This will make housing PIN mouth deformation and terminal PIN mouth functional area deformation, reaming.

2，拔出 housing 时需要捏住 housing 的底部或者线缆的 1-2mm 处水平、均匀的拔出。不得使用蛮力拉拔、拉扯线缆使之拔出，这样会造成端子不定位或者线缆断裂等功能不良。

When Pull out the housing need to hold the bottom of the housing or distance in the cable 1-2mm location Horizontal Pull out, the Pull out power need Horizontal and uniform . do not use brute force drawing, pulling cable , this will cause the terminal is not positioning or cable breakage and other undesirable function.

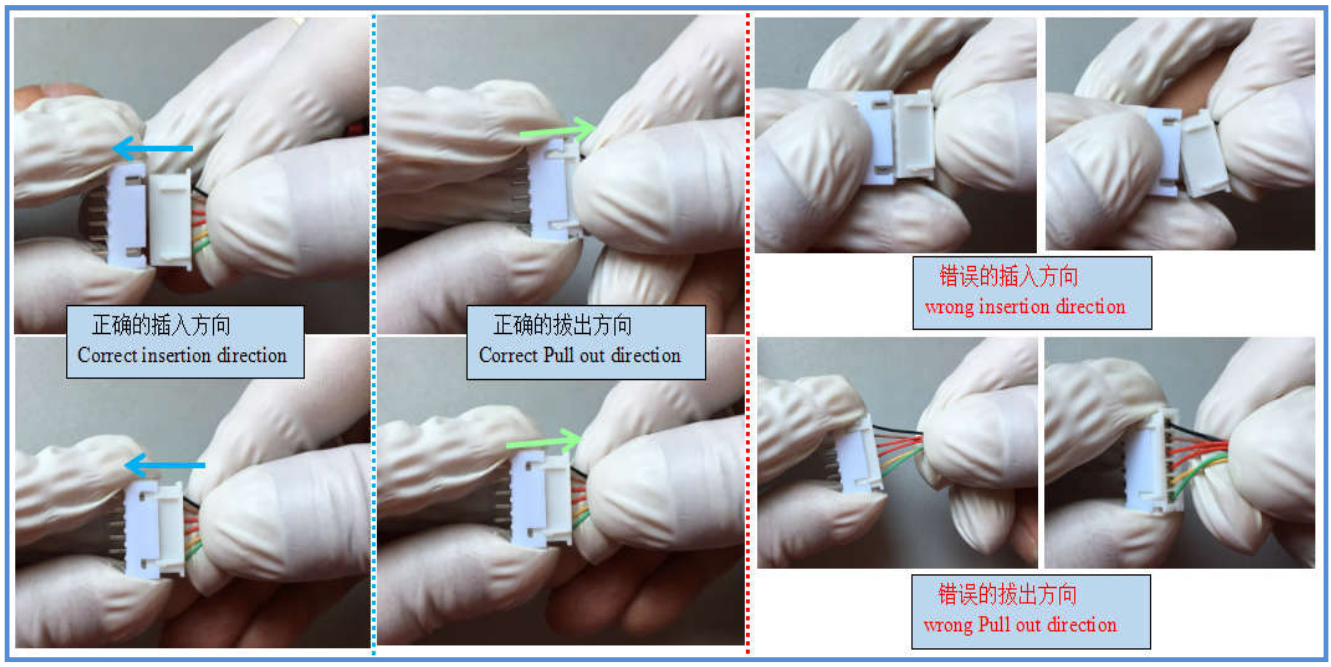

◆LVDS 线束/LVDS harness：

1，在连接的 wafer 上插拔时，要水平向内插入。插入 housing 时需要捏住 housing 的底部或者距离线缆的 1-2mm 处水平的插入或按压 housing 两侧的铁弹片插入；不得向上、向下或者倾斜插拔，这样会使 housing 塑胶体断裂或者端子的金手指变形、断 PIN。

When connecting to the wafer insertion and Pull out，need to Horizontal into insertion. When Insert housing you need to hold the bottom of the housing or distance in the cable 1-2mm location Horizontal into insertion or Press housing on both sides of the iron shrapnel，don’t take up、take down or Tilt the insertion and Pull out，this will break the housing plastic part or terminal finger deformation, broken PIN .

2，拔出 housing 时需要按压 housing 两侧的铁弹片处水平、均匀的拔出。不得使用蛮力拉拔、拉扯线缆受硬力使之拔出，这样会造成端子不定位或者线缆断裂等功能不良。

When Pull out the housing need to Press housing on both sides of the iron shrapnel ,the Pull out power need Horizontal and uniform .do not use brute force drawing, pulling cable ,this will cause the terminal is not positioning or cable breakage and other undesirable function.

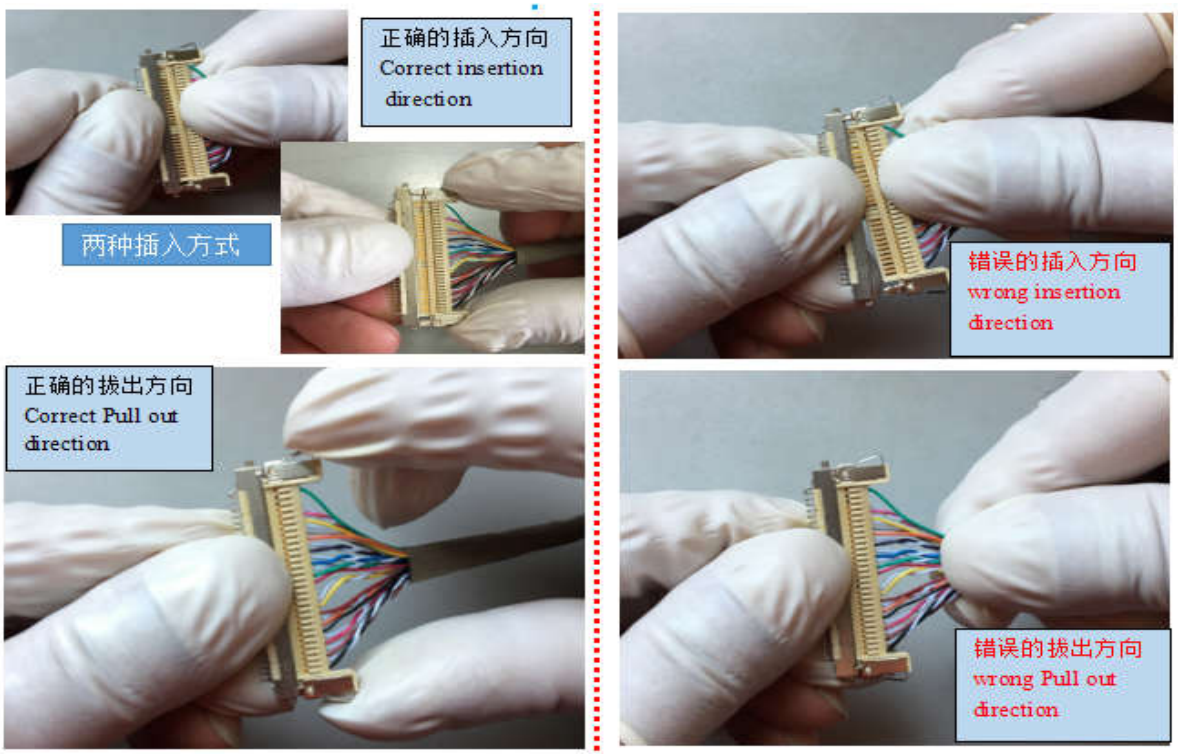

NOTE(S)：

1，要避开同其它物体的某些物理物体的直接接触。
To avoid direct contact with certain physical objects of other objects.

2，在高温高湿的场合下连续使用时，事先请采用实装的评价(评估)。
In the high temperature and high humidity occasions for continuous use, Please evaluate the

implementation (assessment).

3，在使用过程中，如不慎跌落地上或者其它可能使其粘上异物的情况下，必须将导体露出处的脏污清除干净后才能使用（清除异物时要顺着导体的方向，向外清除）。

In the course of using, Such as accidentally fell on the ground Or other conditions that may cause it to stick to a

foreign body, Must be to remove dirt exposed conductor clean after to used (removal of foreign matter to follow the direction of the conductor, outward clearance).

XINYA ELECTRONIC CO.,LTD
TEL:86-0577-62866888 FAX:86-0577-62865999
http://www.xinya-cn.com

核准 APPROVED	审核 CHECKED	制作 DRAWING
石留建	周汉章	潘文欢

规格承认书 Product Specifications

规格SPECIFICATION:		UL 1061 30#TS～16#TS							
项目ITEM		规 格 SPECIFICATION							
导体 CONDUCTOR	线规AWG	30	28	26	24	22	20	18	16
	材质MATERIAL	镀锡铜 TINNED COPPER							
	尺寸COND.SIZE	7/0.100± 0.008	7/0.127 ±0.008	7/0.160 ± 0.009	7/0.200 ± 0.009	7/0.254 ±0.009	7/0.320 ±0.010	16/0.254 ±0.009	26/0.254 ±0.009
绝缘 INSULATION	标称厚度 Nominal Thickness	0.23㎜							
	最小厚度 Min. Thickness	0.18㎜							
	材质MATERIAL	半硬质聚氯乙烯 SRPVC（无DOP NO DOP)							
	OD外径	0.80±0.05	0.90±0.05	1.00±0.05	1.10±0.05	1.30±0.05	1.50±0.10	1.80±0.10	2.10±0.10
	颜色COLOUR	任意Optional							
Conductor Resistance: Max(Ω/Km,20℃)		381	239	150	94.2	59.4	36.7	23.2	14.6
印 字 MARKING		AWM 1061 E170689 VW-1 80℃ 300V xxAWG XINYA CSA AWM I A LL109915 FT1 80℃ 300V xxAWG -F- LM							

电气性能ELECTRICAL CHARACTERISTICS	物理性能PHYSICAL CHARACTERISTICS
1. 额定值Rating : 温度TEMP 80℃ ; 电压VOLTAGE 300V 2.浸水耐压Dielectric-Withstand Test:2000V 3.火花电压Spark Test:3000V	1.抗张强度Tensile Strength: 2.11kgf/mm^2 2. 伸长率Elongation: Unaged: 100% min 3. 热冲击Heat shock test: 不开裂NO CRACKING 4. 冷弯Cold bend test: 不开裂NO CRACKING 5. 加热变形Deformation test: MAX 50% 6. 燃烧测试Flame test: PASS VW-1

剖面图Cross - Sectional View :

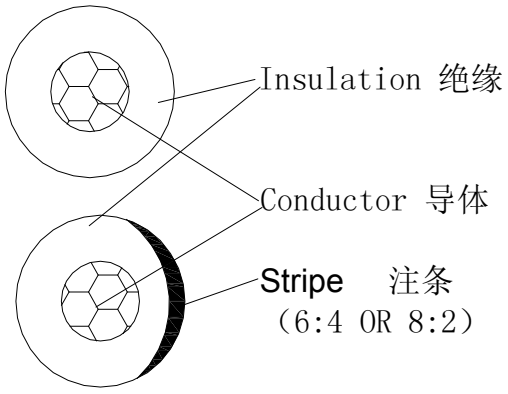

备 注 REMARK

图号 PART NO.	SP1112028	客户承认 APPROVED BY	

XINYA ELECTRONIC CO.,LTD

新亚电子有限公司

MATERIAL CERTIFICATE（Cu）

材料成份分析表（铜）

COMPONENT: 成分	RATIO（%） 含量
COPPER 铜	98.5
BISMUTH 铋	0.0002
ANTIMONY 锑	0.0004
ARSENIC 砷	0.0005
IRON 铁	0.001
LEAD 铅	0.0005
TIN 锡	1.3
SULFUR 硫	0.0015
OXYGEN 氧	0.00 1
SELENIUM 硒	0.0002
ARGENTUM 银	0. 0025
TE 碲	0. 0002

Pb≤100ppm(According to EPA3050B),Cd≤5ppm(According EN1122:2001)

根据 EN1122 和 EPA3050B 参照 SOSY 标准、铅≤100ppm　隔≤5ppm

新亚电子有限公司

品保部

2010.4.22

新 亚 电 子 有 限 公 司

XINYA ELECTRONIC CO.,LTD.

PVC 材质证明

（MATERIAL CERTIFICATION OF PLASTICIZED PVC COMPOUNDS）

MATERIAL 材料	PERCENT 百分比
PVC RESIN PVC 树脂	50%
FILLER(CaCO3) 填充剂(CaCO3)	15%
PLASTICIZER(DPHP/TOTM) 增塑剂(DPHP/TOTM)	28%
STABILIZER(Ca-Zn COMPOUNDS) 稳定剂（Ca-Zn 化合物）	4%
LUBRICANT(STERIC ACID) 润滑剂（硬脂酸）	0.50%
FIREPROOFENT（Sb_2O_3） 阻燃剂（Sb_2O_3）	2%
OTHER 其它	0.50%

新亚电子有限公司

品保部

2017-10-11

UL Product iQ®

Appliance Wiring Material - Component

COMPANY

XINYA ELECTRONIC CO LTD
No.1, Panzhuyang Road
Laizhai Intelligent Industrial Park, Beibaixiang Town
Yueqing, Zhejiang Sheng 325603 China

E170689

Table of Recognized Styles

Single-conductor, thermoplastic insulation							
1007	1275	1430	1631	1792	10125	10362	10974
1010	1283	1431	1637	1867	10183	10368	11027
1015	1316	1452	1640	1887	10231	10369	11028
1028	1330	1500	1671	1901	10241	10466	11079
1032	1331	1517	1672	10002	10267	10501	11193
1056	1332	1533	1674	10059	10269	10584	11303
1061	1333	1569	1685	10064	10272	10588	11304
1095	1346	1571	1691	10070	10279	10602	11469
1107	1347	1589	1726	10071	10297	10800	11625
1108	1354	1617	1728	10086	10316	10913	11627
1185	1365	1618	1745	10097	10335	10918	11722
Multiple-conductor, thermoplastic insulation							
2095	2517	2587	2845	20167	20549	21099	21458
2096	2547	2651	2851	20251	20574	21100	21515
2103	2551	2661	2854	20276	20626	21143	21520
2405	2552	2689	2877	20288	20696	21307	21869
2408	2555	2725	2881	20295	20744	21308	22224
2464	2556	2733	2919	20327	20798	21311	22258
2468	2562	2734	2951	20328	20855	21445	22386
2474	2570	2789	2960	20346	20937	21451	22431
2476	2571	2791	2990	20379	21016	21452	

2501	2586	2835	20080	20464	21088	21455	
Single-conductor, thermoset insulation							
3173	3239	3272	3346	3364	3436	3485	3817
3195	3265	3289	3347	3385	3443	3567	3917
3196	3266	3302	3348	3386	3478	3619	3918
3199	3271	3321	3363	3398	3481	3737	
Multiple-conductor, thermoset insulation							
4411	4413	4478	4523				

Marking: Company name, voltage rating, temperature rating, conductor size, conductor material if other than copper,.

Last Updated on 2023-06-20

The appearance of a company's name or product in this database does not in itself assure that products so identified have been manufactured under UL Solutions' Follow - Up Service. Only those products bearing the UL Mark should be considered to be Certified and covered under UL Solutions' Follow - Up Service. Always look for the Mark on the product.

UL Solutions permits the reproduction of the material contained in Product iQ subject to the following conditions: 1. The Guide Information, Assemblies, Constructions, Designs, Systems, and/or Certifications (files) must be presented in their entirety and in a non-misleading manner, without any manipulation of the data (or drawings). 2. The statement "Reprinted from Product iQ with permission from UL Solutions" must appear adjacent to the extracted material. In addition, the reprinted material must include a copyright notice in the following format: "©2024 UL LLC."

KUNSHAN XINGHONGMENG ELECTRONIC CO.，LTD
TEL:0512-50191998 FAX:0512-50191996
http://www.szshongmeng.cn

核准 APPROVED	审核 CHECKED	制作 DRAWING
STONE SHI	ADAM	NICOLE

规格承认书 Product Specifications

REV:1.0

规格SPECIFICATION:		UL 1061 30#TS～16#TS							
项目ITEM		规 格 SPECIFICATION							
导体 CONDUCTOR	线规AWG	30	28	26	24	22	20	18	16
	材质MATERIAL	镀锡铜 TINNED COPPER							
	尺寸COND.SIZE	7/0.100±0.008	7/0.127±0.008	7/0.16±0.009	7/0.20±0.009	7/0.254±0.009	7/0.32±0.01	16/0.254±0.009	26/0.254±0.009
绝缘 INSULATION	平均厚度 Average Thickness	0.23㎜							
	最小厚度 Min. Thickness	0.18㎜							
	材质MATERIAL	半硬质聚氯乙烯 SRPVC							
	OD外径(MM)	0.80±0.05	0.90±0.05	1.00±0.05	1.10±0.05	1.30±0.05	1.50±0.10	1.80±0.10	2.10±0.10
	颜色COLOUR	任意Optional							
Conductor Resistance: Max(Ω/Km,20℃)		381	239	150	94.2	59.4	36.7	23.2	14.6
印 字 MARKING		AWM 1061 E315421 VW-I 80℃ 300V XXAWG HONGMENG AWM I A FTI 80℃ 300V XXAWG LM							

电气性能ELECTRICAL CHARACTERISTICS	物理性能PHYSICAL CHARACTERISTICS
1. 额定值Rating : 温度TEMP 80℃ ; 电压VOLTAGE 300V 2.浸水耐压Dielectric-Withstand Test:2000V 3.火花电压Spark Test:3000V	1.抗张强度Tensile Strength: 2.11kgf/mm² 2. 伸长率Elongation: Unaged: 100% min 3. 热冲击Heat shock test: 不开裂NO CRACKING 4. 冷弯Cold bend test: 不开裂NO CRACKING 5. 加热变形Deformation test: MAX 50% 6. 燃烧测试Flame test: PASS VW-1

剖面图Cross - Sectional View :

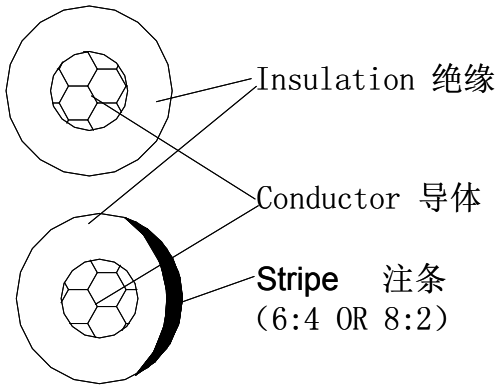

备 注 REMARK

图号 PART NO.	HM160503001	客户承认 APPROVED BY	

XINGHONGMENG ELECTRONIC CO.,LTD

兴鸿蒙电子有限公司

MATERIAL CERTIFICATE（Cu）

材料成份分析表（铜）

COMPONENT： 成分	RATIO（%） 含量
COPPER 铜	99.92
BISMUTH 铋	0.0002
STIBIUM 锑	0.0005
ARSENIC 砷	0.0005
IRON 铁	0.0005
NICKEL 镍	0.0004
LEAD 铅	0.0005
TIN 锡	0.07
SULFUR 硫	0.0001
OXYGEN 氧	0.006
ZINCUM 锌	0.0002
PHOSPHOR 磷	0.0005
ADMIUM 镉	0.00005

Pb≤50ppm(According to EPA3050B),Cd≤5ppm(According EN1122:2001)
根据 EN1122 和 EPA3050B 规定铅≤90ppm 镉≤5ppm

以上资料由本厂供方提供。其中镀锡线中锡的含量来自于铜丝的镀层，主要是防止铜丝氧化而特意加工为之，其它成份为自然界铜矿物质中自然含有的元素，无其它任何作用，也属非有意增加。

兴鸿蒙电子有限公司
工程部

2015 – 1 - 5

XINGHONGMENG ELECTRONIC CO.,LTD

兴鸿蒙电子有限公司

MATERIAL CERTIFICATE （PVC）
材料成份分析表（PVC）

COMPONENT： 成分	RATIO（%） 含量
PVC RESIN 聚氯乙烯树脂	55
PLASTICIZER 增塑剂	20
FILLER(CCR&Caco3) 填充	16.8
STABILIZER 稳定剂	5
RETARDANT(Sb2o3) 阻燃剂	2.5
LUBRICANT 润滑剂	0.4
PIGMENT 色粉	0.3

Pb≤50ppm(According to EPA3050B),Cd≤5ppm(According EN1122:2001)
根据 EN1122 和 EPA3050B 规定铅≤90ppm 镉≤5ppm

以上资料由本厂供方提供。

兴鸿蒙电子有限公司

工程部

2015 – 1 - 5

UL Product iQ®

AVLV2.E315421 - Appliance Wiring Material - Component

Appliance Wiring Material - Component

Kunshan Xinghongmeng Electronic Co Ltd E315421
No. 1118 Jingban Rd
Shipai Industrial Area
Bacheng Town
Kunshan, Jiangsu 215312 China

Table of Recognized Styles

Single-conductor, thermoplastic insulation							
1007	1331	1569	1685	10002	10272	10602	11627
1015	1332	1571	1692	10064	10316	10708	11828
1017	1333	1589	1729	10070	10368	10800	
1028	1354	1617	1731	10086	10369	10954	
1032	1430	1618	1745	10097	10370	10958	
1061	1500	1637	1766	10231	10455	10974	
1095	1516	1640	1847	10248	10456	11136	
1185	1517	1672	1867	10267	10584	11530	
1330	1533	1674	1927	10269	10588	11602	
Multiple-conductor, thermoplastic insulation							
2095	2570	2725	2877	20267	20646	21016	21297
2464	2574	2733	2919	20276	20694	21064	21307
2468	2586	2789	2969	20327	20789	21088	21310
2517	2587	2835	2990	20375	20936	21089	21311
2547	2651	2844	20080	20376	20937	21099	21402
2555	2661	2851	20233	20379	20939	21139	
2562	2678	2854	20251	20549	20940	21143	
Single-conductor, thermoset insulation							
3173	3271	3302	3348	3385	3443	3619	3994
3265	3272	3321	3363	3386	3485	3781	
3266	3289	3347	3364	3398	3567	3817	

Multiple-conductor, thermoset insulation			
4384	4411	4413	4478

Marking: Company name, voltage rating, temperature rating, conductor size, conductor material if other than copper,.

Last Updated on 2022-04-06

The appearance of a company's name or product in this database does not in itself assure that products so identified have been manufactured under UL's Follow-Up Service. Only those products bearing the UL Mark should be considered to be Certified and covered under UL's Follow-Up Service. Always look for the Mark on the product.

UL permits the reproduction of the material contained in the Online Certification Directory subject to the following conditions: 1. The Guide Information, Assemblies, Constructions, Designs, Systems, and/or Certifications (files) must be presented in their entirety and in a non-misleading manner, without any manipulation of the data (or drawings). 2. The statement "Reprinted from the Online Certifications Directory with permission from UL" must appear adjacent to the extracted material. In addition, the reprinted material must include a copyright notice in the following format: "© 2022 UL LLC"

端子规格图号DRAWING NO.
D1004TOP001S

版本 REV.	日期 DATE	DCN NO.	变更内容 DESCRIPTION	制图 DRAWN
C	2015.06.19		增加标注说明	Ring. li

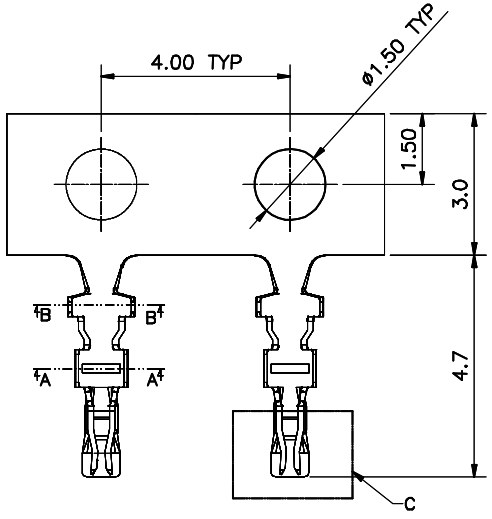

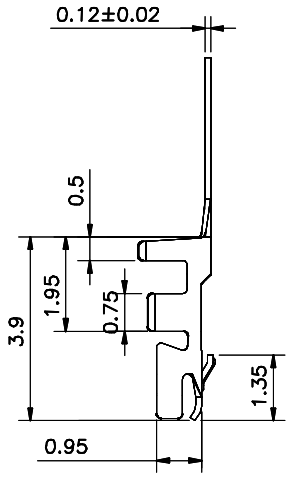

产品编码：

D1004– T O P . XX –X
① ② ③ ④ ⑤

① Series NO.
② T: Terminal
③ □: Standard
④ P: Phosphor Bronze
⑤ Plating Code:

定义			编码
◎ 全锡			A
◎ Gold plated			
flash	B	15u″	F
10u″	E	30u″	J
◎ V为环保电镀			

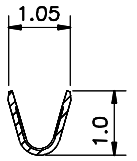

SECTION A–A
SCALE 10:1

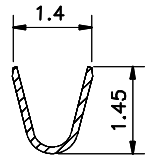

SECTION B–B
SCALE 10:1

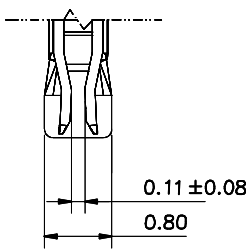

DETAIL C
SCALE 15:1

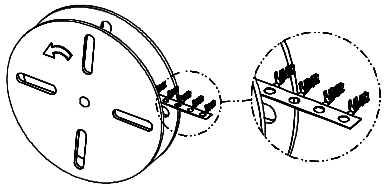

端子电镀后绕向示意图

PART NO.	Wire Range	Insulation O.D.	Material	Finish DESCRIPTION	Qty/Reel
D1004–TOP.VB–X	AWG#28–#32	0.65~0.92mm	Phosphor Bronze	30u" Min. NICKEL Under PLATING OVER ALL GOLD FLASH PLATING OVER ALL(LEAD FREE).	16000PCS
D1004–TOP.VA–X	AWG#28–#32	0.65~0.92mm	Phosphor Bronze	30u" Min. NICKEL PLATING AS BASE; 100u" Min. TIN PLATING OVER ALL(LEAD FREE).	16000PCS
D1004–TOP–X	AWG#28–#32	0.65~0.92mm	Phosphor Bronze	NO PLATING	16000PCS

GENERL TOLERANCE		制名 (DR.)	Ring. li	料号 PART NO.	D1004–TOP.XX–X	版本 REV.	C
X.±0.30	X.°±2°	审核 (CHK.)	Knox. Jin	品名 TITLE	端子	页次 SHEET	1/1
.X±0.20	.X°±1°	核准 (APPD.)	Knox. Jin	客户料号 CUTM.NO.			
.XX±0.15	.XX°±0.5°	第1版 (OR.D.)	2012.08.17	Xinya Electronics 苏州新亚电通有限公司			
.XXX±0.05	.XXX°±0.5°	单位 UNITS	MM 比例 SCALE 1:1	SUZHOU XINYA ELECTRONIC COMMUNICATION Co. LTD.			

塑胶规格图号DRAWING NO. D1004001S

HF

版本 REV.	日期 DATE	DCN NO.	变更内容 DESCRIPTION	制图 DRAWN
1				

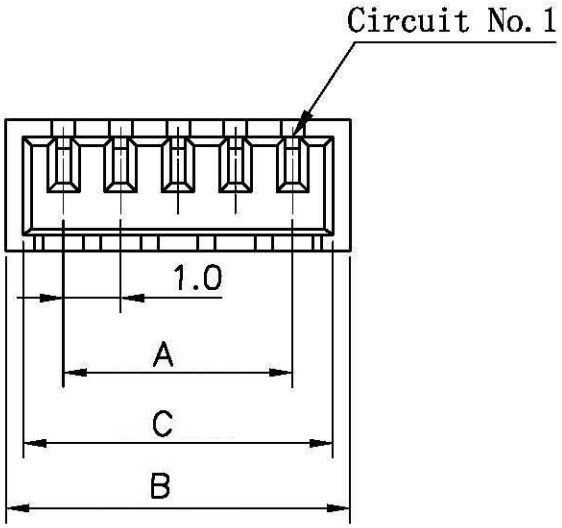

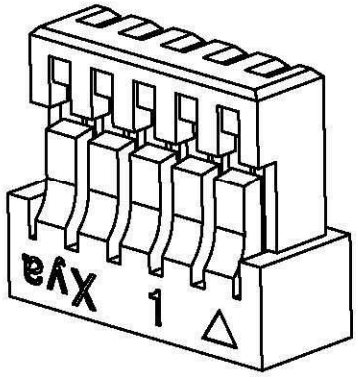

Material:
Nylon 66 UL 94V-0
Color Nature

Product Code:

D1004 - XX P - X - HF
① ② ③

① Series No.
② Circuits Number
③ HF: Halogen Free

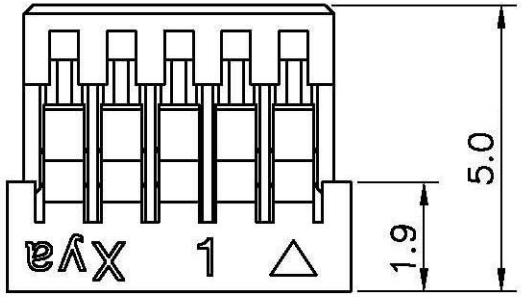

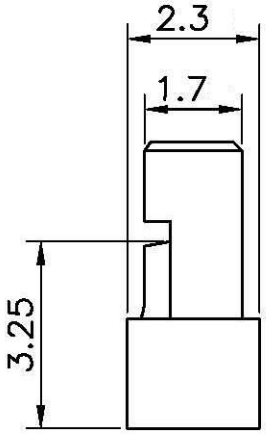

DIM. A = 1.00 * NO. OF SPACES
DIM. B = DIM. A + 2.00
DIM. C = DIM. A + 1.40
* AVAILABLE IN 2 THROUGH 20 CIRCUITS

GENERL TOLERANCE		制图 (DR.)	Ring.li	料号 PART NO.	D1004-XXP-X-HF	版本 REV.	1
X.±0.50	X.°±2°	审核 (CHK.)	Knox.Jin	品名 TITLE	Housing	页次 SHEET	1/1
.X±0.30	.X°±1°	核准 (APPD.)	Knox.Jin	客户料号 CUTM.NO.			
.XX±0.20	.XX°±0.5°	第1版 (OR.D.)	2013.01.11	Xinya	苏州新亚电通有限公司		
.XXX±0.10	.XXX°±0.5°	单位 UNITS	MM 比例 SCALE 1:1	SUZHOU XINYA ELECTRONIC COMMUNICATION Co. LTD.			

端子规格图号DRAWING NO.
D1251TOP002S

版本 REV.	日期 DATE	DCN NO.	变更内容 DESCRIPTION	制图 DRAWN
B	2015.06.22	2141506005C	增加标注说明	王腾
C	2015.06.22		开口尺寸变更	王腾
D	2024.07.24		修改端子最大铆压线径由1.0mmMax调整为0.9mmMax	范东林

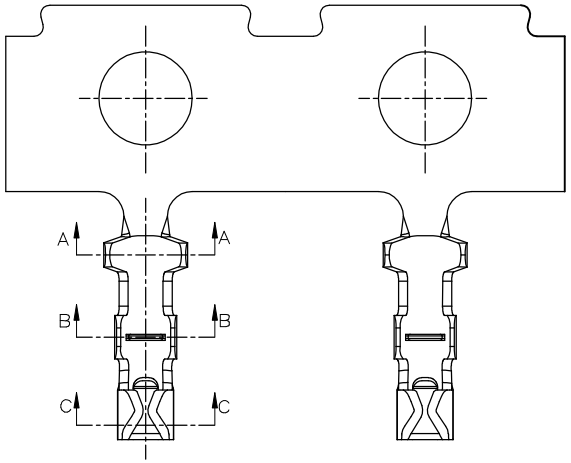

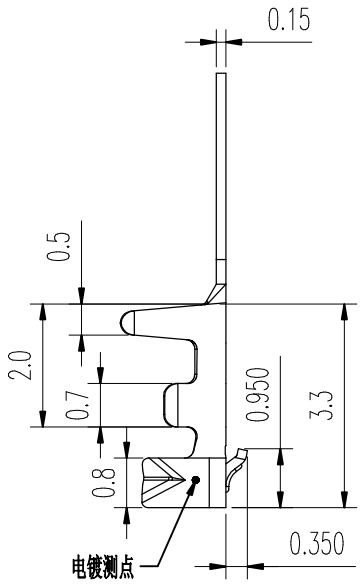

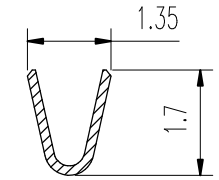

Section A–A

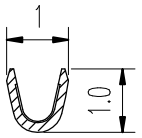

Section B–B

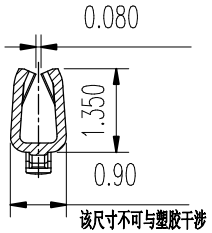

Section C–C

产品编码：

D1251 – T O P . XX – X
① ② ③ ④ ⑤

① Series No.
② T:Terminal
③ O:Standard
④ P:Phosphor Bronze
⑤ Plating Code:

Definition	Code
◎ Tin Plating	A
◎ Gold Flash	B
◎ 3u″ Gold Plating	C
◎ 10u″ Gold Plating	E
◎ 15u″ Gold Plating	F
Prefix "V" means lead free plating	

Material Type	Material Thickness	Plating Thickness	Crimped Wire	Insulation O.D.
Phosphor Bronze	0.15mm	Gold or 120μ″ min Tin plated Over 30u″ Min Nickel Plated	AWG28#~32#	0.90mm(max)

GENERL TOLERANCE		制图 (DR.)	VIC. WONG	料号 PART NO.	D1251-TOP.XX-X	版本 REV.	D	
X.±0.35	X.°±2°	审核 (CHK.)	KNOX. JIN	品名 TITLE	TERMINAL	页次 SHEET	1/1	
.X±0.30	.X°±1°	核准 (APPD.)	KNOX. JIN	客户料号 CUTM.NO.				
.XX±0.20	.XX°±0.5°	第1版 (OR.D.)	2014.11.17	Xinya Electronics 苏州新亚电通有限公司				
.XXX±0.10	.XXX°±0.5°	单位 UNITS	MM	比例 SCALE	1:1	SUZHOU XINYA ELECTRONIC COMMUNICATION Co. LTD.		

版本 REV.	日 期 DATE	DCN NO.	变更内容 DESCRIPTION	制图 DRAWN
B				

塑胶规格图号DRAWING NO. D1251002S

Part No	Dimensions		
	A	B	C
2P		3.00	4.25
3P	2.50	4.25	5.50
4P	3.75	5.50	6.75
5P	5.00	6.75	8.00
6P	6.25	8.00	9.25
7P	7.50	9.25	10.50
8P	8.75	10.50	11.75
9P	10.00	11.75	13.00
10P	11.25	13.00	14.25
11P	12.50	14.25	15.50
12P	13.75	15.50	16.75
13P	15.00	16.75	18.00
14P	16.25	18.00	19.25
15P	17.50	19.25	20.50
16P	18.75	20.50	21.75
17P	20.00	21.75	23.00
18P	21.25	23.00	24.25
19P	22.50	24.25	25.50
20P	23.75	25.50	26.75

4~20P 双卡点

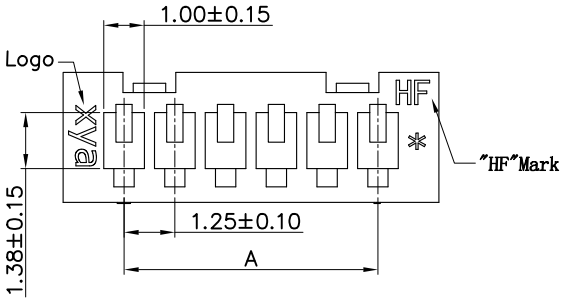

2~3P 单卡点

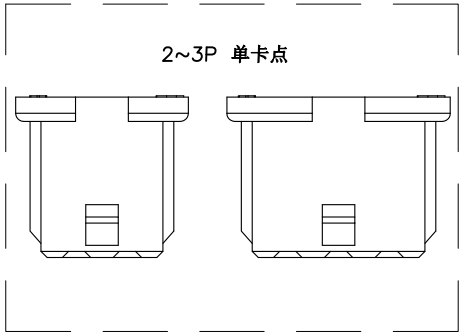

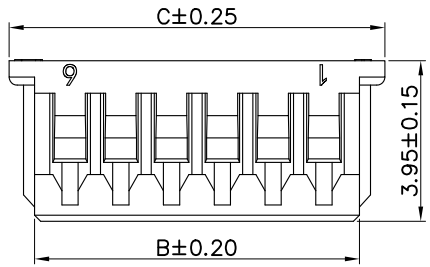

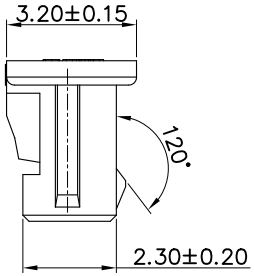

D1251 - XX P - X - HF

① ② ③

① Series No.

② Circuits Number

③ Halogen Free

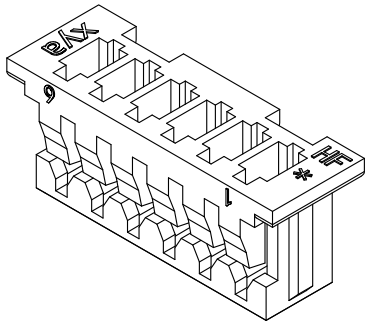

3D VIEW

Specifications:

1. Temperature range: -40℃∽85℃
2. Rated voltage: 125V AC/DC
3. Rated current: 1A AC,DC
4. Withstand voltage: 250V/minute
5. Contact Resistance: 20mΩ max
6. Insulation resistance: 100MΩ min
7. Material: PA66 , UL94V-0 . White

GENERL TOLERANCE		制 图 (DR.)		料 号 PART NO.	D1251-XXP-X-HF	版 本 REV.	A
X.±0.30	X.°±2°	审 核 (CHK.)		品 名 TITLE	P1.25 Housing	页 次 SHEET	1/1
.X±0.25	.X°±1°	核 准 (APPD.)		客户料号 CUTM.NO.			
.XX±0.20	.XX°±0.5°	第1版 (OR.D.)	2014.11.07				
.XXX±0.15	.XXX°±0.5°	单 位 UNITS	MM 比 例 SCALE 1:1				

苏州新亚电通有限公司

SUZHOU XINYA ELECTRONIC COMMUNICATION Co. LTD.

UL Product iQ®

Note: We are enhancing our systems and you may notice duplicate entries/missing/outdated data. During this interim period, please contact our Customer Service at https://www.ul.com/about/locations.

Connectors for Use in Data, Signal, Control and Power Applications - Component

COMPANY

SUZHOU XINYA ELECTRIC COMMUNICATION CO LTD
No.98 Ruyuan Rd
Xiangcheng Industrial District
Suzhou, Jiangsu 215132 China

E216870

Marking: Company name and model designation.
Note: For additional marking information, refer to the Guide Information Page.

Model(s): D1254, D2014, D2018, D7913, S4061, W7913

Model(s): Cat. No. M3560 followed by dash, followed by 02 thru 03.

Model(s): Cat. No. M7060 followed by dash, followed by 02 thru 06, followed by S.

Model(s): Cat. No. M8261 followed by dash, followed by 02 thru 03, followed by S.

Model(s): D1007, followed by -03 thru 06, followed by P

Model(s): D1014, followed by -03 thru 06, followed by P

Model(s): D1202, followed by -02 thru 03, followed by P

Model(s): D1256, followed by -02 thru 12, followed by P

Model(s): DE011-02, followed by -02, followed by P

Model(s): WE011-02, followed by -02, followed by P

Connectors, Model(s): 2361 Series, 3961 Series, 3962 Series, Cat. No. D12515, Cat. No. M7060, Cat. No. M8261, Cat. No. S101 -2 thru -14, Cat. No. S1316, Cat. No. S2013, f/b -2 thru -12, Cat. No. W2012, f/b -4, -6, -8 thru -40, Cat. No. W2017, followed by thru -14, Cat. No. W2325 followed by -2 thru -5, Cat. No. WE011, followed by -02, Cat. Nos. D1004, Cat. Nos. D1006, Cat. Nos. D7913 and W7913, f/b -2, Cat. Nos. DE011, followed by -02, D1002-02 thru D1002-10, D1251-02 thru D1251-15, D1257-02 thru D1257-10, D2001-02P thru D2001-16P, D2006-06P, D2006-08P, D2006-10P, D2006-12P, D2006-14P, D2006-16P, D2006-18P, D2006-20P, D2006-22P, D2006-24P, D2006-26P, D2006-28P, D2006-30P, D2006-32P, D2006-34P, D2006-36P, D2006-38P, D2006-40P, D2008-02 thru D2008-16, D2010-02 thru D2010-15, D2011-02P thru D2011-16P, P2404-02, P2404-03, P2404-04, P2404-05, P2404-06, P2404-07, P2404-08, P2404-09, P2404-10, P2404-15, P2404-20, P2404-25, P2404-30, S1013, S1311-02 thru S1311-15, S1312-10, S1312-20, S1312-30, S1312-40, S1315-02 thru S1315-15, W2010-04, W2010-06, W2010-08, W2010-10, W2010-12, W2010-14, W2010-16, W2010-18, W2010-20, W2010-22, W2010-24, W2010-26, W2010-28, W2010-30, W2010-32, W2010-34, W2010-36, W2010-38, W2010-40, W2011-02 thru W2011-15, W2015-02 thru W2015-16, W2411-02 thru W2411-20, W2415-02 thru W2415-15, W3511-02, W7011-03A, W7011-03A-V01, W7011-04A, W7011-04A-V02, W7011-05A, W7011-05A-V02

Connectors, Model(s): W2511 , followed by 03, 04, 05, 06, 07, or 08.

Last Updated on 2024-12-06

The appearance of a company's name or product in this database does not in itself assure that products so identified have been manufactured under UL Solutions' Follow - Up Service. Only those products bearing the UL Mark should be considered to be Certified and covered under UL Solutions' Follow - Up Service. Always look for the Mark on the product.

UL Solutions permits the reproduction of the material contained in Product iQ subject to the following conditions: 1. The Guide Information, Assemblies, Constructions, Designs, Systems, and/or Certifications (files) must be presented in their entirety and in a non-misleading manner, without any manipulation of the data (or drawings). 2. The statement "Reprinted from Product iQ with permission from UL Solutions" must appear adjacent to the extracted material. In addition, the reprinted material must include a copyright notice in the following format: "©2025 UL LLC."

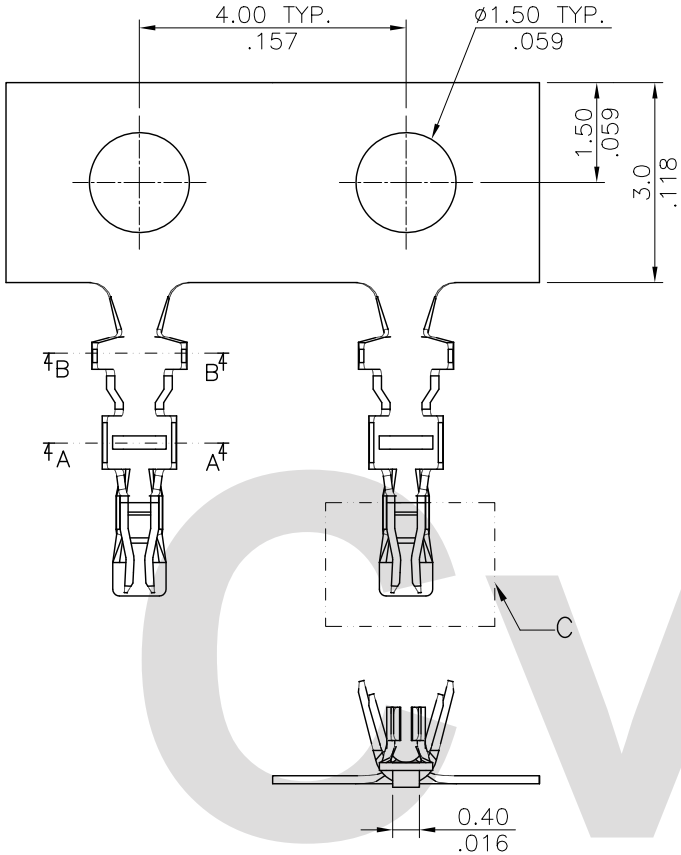

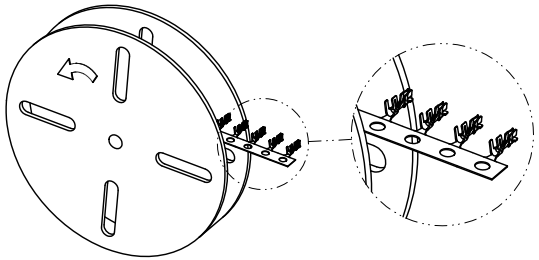

電鍍後捲料方向

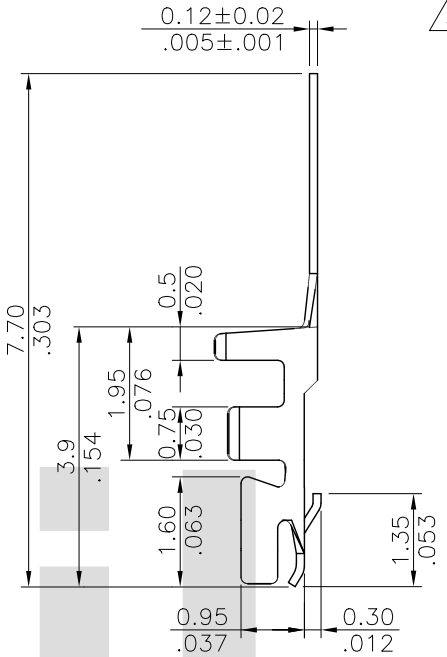

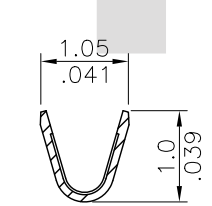

SEC. A–A
SCALE 10/1

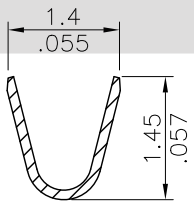

SEC. B–B
SCALE 10/1

△3

Wire Range	Insulation Diameter	Reel Q'ty
AWG #28~#32	0.65~0.92(mm)	16,000 PCS.

Ordering Code:

CI14 T01 1 P E 0
① ② ③ ④ ⑤ ⑥

① Series No.
② Type: T01= AWG #28~ #32
③ Plating: 1= Tin Plated over Cu
④ Material: P= Phosphor Bronze
⑤ Plating method: E= Pre-tinned
⑥ Option: 0= Standard

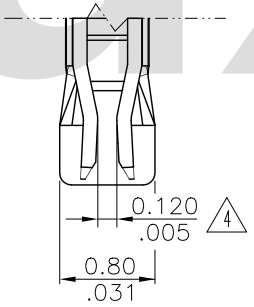

DETAIL C
SCALE: 15/1

RoHS Compliant

SYM	NAME	DATE	REVISIONS
△4	Tim	05/10-10'	ECN10155
△3	Eager	09/03-09'	ECN09452
△2	Eager	06/18-09'	ECN09310
△1	Eager	06/05-09'	Change Plating Method

CVILUX CORP
2010.06.01
ISSUED

		DATE
DRAWN BY:	Tim	5/10-10'
ENGINEER:	Clark	5/10-10'
CHECKED BY:	David	5/10-10'
APPROVED BY:	Alex	5/10-10'

UNIT: mm / inch

TOLERANCE UNLESS OTHERWISE SPECIFIED

.X	± 0.25/.010	X°	± 1°
.XX	± 0.15/.006	.X°	±
.XXX	± 0.05/.002	.XX°	±

TITLE: FOR CI14 SERIES CRIMP TERMINAL

MATERIAL:

FINISH:

瀚荃股份有限公司
CviLux Corporation

DRAWING NO.	CI1403SC	PART NO.	CI14T011PE0
SCALE	8 / 1	SHEET	1 OF 1

Material:

Glass filled polyester UL 94V-0,
Color Nature

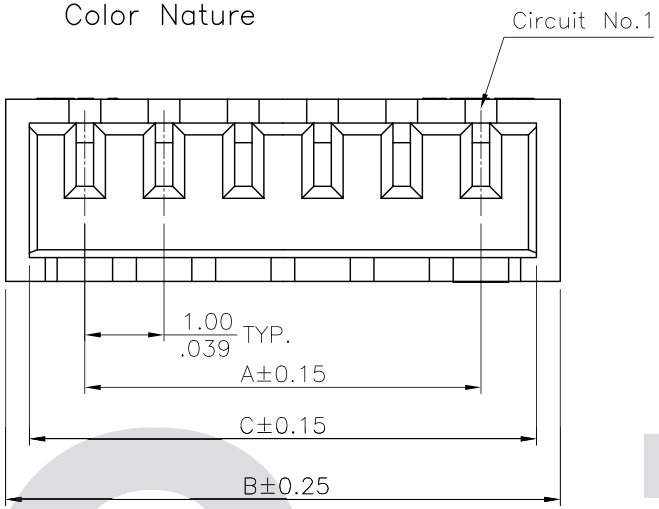

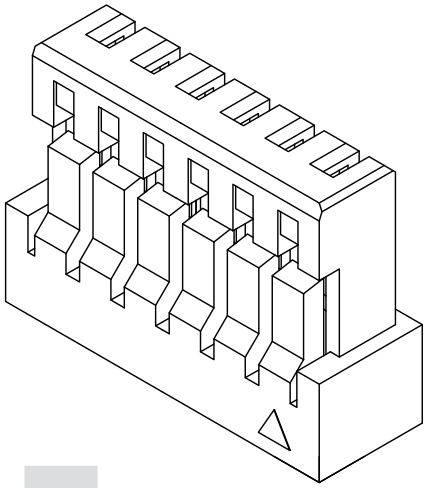

Ordering Code

CI14 ① ** ② S ③ 000A ④ - NH ⑤

① Series No.
② No. of Circuits: 02~20 Pin
③ S= Connector housing
④ Other option:
000A= Holes
⑤ Other option:
-NH= Halogen-Free

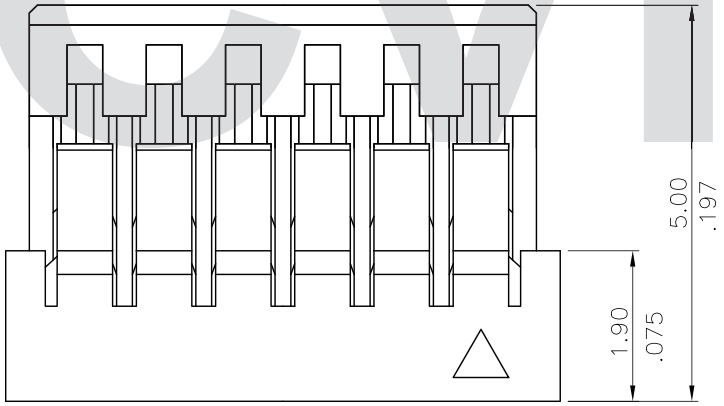

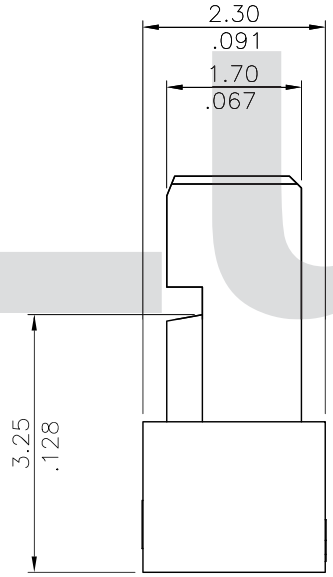

DIM. A = 1.00 x NO. OF SPACES
DIM. B = DIM. A + 2.00
DIM. C = DIM. A + 1.40
* AVAILABLE IN 2 THROUGH 20

Halogen-Free

RoHS Compliant

CviLux

SYM	NAME	DATE	REVISIONS			DATE
4			CVILUX CORP 2010.04.20 ISSUED			
3				DRAWN BY:	Tim	4/15-10'
2				ENGINEER:	Clark	4/15-10'
1				CHECKED BY:	David	4/15-10'
				APPROVED BY:	David	4/15-10'

UNIT: mm / inch

TOLERANCE UNLESS OTHERWISE SPECIFIED

.X ± 0.30/.012	X.° ± 1°
.XX ± 0.20/.008	.X° ±
.XXX ± 0.10/.004	.XX° ±

TITLE: CI14 SERIES HOUSING

MATERIAL:

CUSTOMER:

瀚荃股份有限公司
CviLux Corporation

DRAWING NO.	CI1420SA	PART NO.	CI14**S000A-NH
SCALE	10 / 1	SHEET	1 OF 1

iq.ul.com

PROSPECTOR® CLICK TO CONTINUE

View additional material information including performance and processing data

The information presented on the UL Prospector datasheet was acquired by UL Prospector from the producer of the material. UL Prospector makes substantial efforts to assure the accuracy of this data. However, UL Prospector assumes no responsibility for the data values and strongly encourages that upon final material selection, data points are validated with the material supplier.

Component - Plastics E44716

Guide Information

SOLVAY ENGINEERING PLASTICS GBU

QUARTIER BELLE-ETOILE, AVE RAMBOZ, BOITE POSTALE 64, ST FONS CEDEX 69192 FR

A 50H1 (r3)(f2)

Polyamide 66 (PA66), unfilled "Technyl", furnished as pellets

Color	Min. Thk (mm)	Flame Class	HWI	HAI	RTI Elec	RTI Imp	RTI Str
ALL	0.4	V-0	4	3	130	105	120
	0.75	V-0	2	3	130	105	120
	1.5	V-0	2	3	130	105	120
	3.0	V-0	2	3	130	105	120

Comparative Tracking Index (CTI): 0

Dielectric Strength (kV/mm): -

High-Voltage Arc Tracking Rate (HVTR): 0

Dimensional Stability (%): -

Inclined Plane Tracking (IPT) kV: 1.5

Volume Resistivity (10^x ohm-cm): -

Surface Resistivity (10^x ohm-cm):

High Volt, Low Current Arc Resis (D495): 6

(f2) - Subjected to one or more of the following tests: Ultraviolet Light, Water Exposure or Immersion in accordance with UL 746C, where the acceptability for outdoor use is to be determined by UL.

(r3) - Virgin and regrind up to 50% by weight inclusive have the same basic material characteristics

NOTE - Materials designated "Technyl" may be prefixed by the letters "TY".

ANSI/UL 94 small-scale test data does not pertain to building materials, furnishings and related contents. ANSI/UL 94 small-scale test data is intended solely for determining the flammability of plastic materials used in the components and parts of end-product devices and appliances, where the acceptability of the combination is determined by UL.

Report Date: 2004-12-14

Last Revised: 2016-08-02

© 2020 UL LLC

IEC and ISO Test Methods

Test Name	Test Method	Units	Thk (mm)	Value
Flammability	IEC 60695-11-10	Class (color)	0.4	V-0 (ALL)
			0.75	V-0 (ALL)
			1.5	V-0 (ALL)
			3.0	V-0 (ALL)
Glow-Wire Flammability (GWFI)	IEC 60695-2-12	°C	0.4	960
			0.75	960
			1.5	960
			3.0	960
Glow-Wire Ignition (GWIT)	IEC 60695-2-13	°C	0.4	960
			0.75	960
			1.5	775
			3.0	700
IEC Comparative Tracking Index	IEC 60112	Volts (Max)	-	-
IEC Ball Pressure	IEC 60695-10-2	°C	-	190
ISO Heat Deflection (1.80 MPa)	ISO 75-2	°C	-	-
ISO Tensile Strength	ISO 527-2	MPa	-	-
ISO Flexural Strength	ISO 178	MPa	-	-
ISO Tensile Impact	ISO 8256	kJ/m^2	-	-
ISO Izod Impact	ISO 180	kJ/m^2	-	-
ISO Charpy Impact	ISO 179-2	kJ/m^2	-	-

RoHS

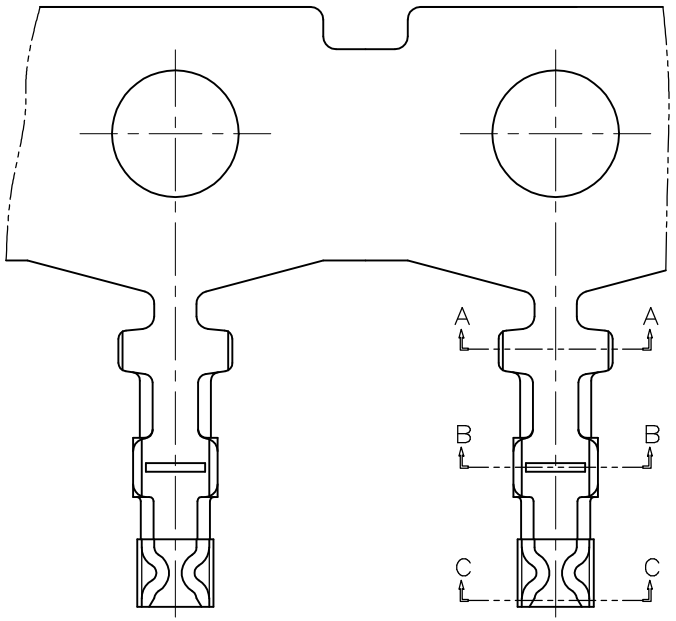

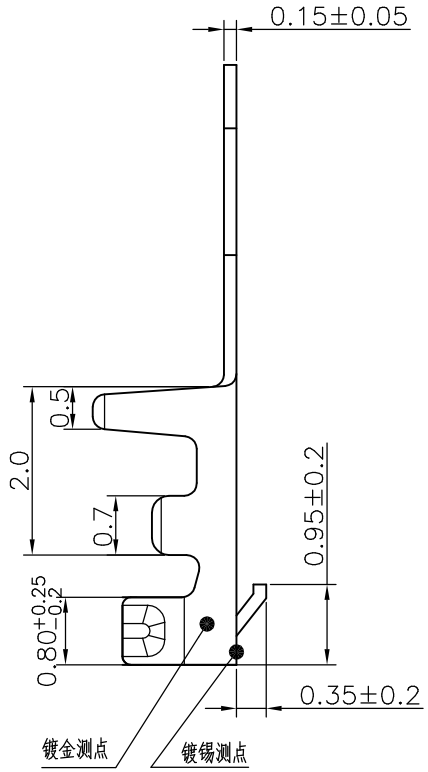

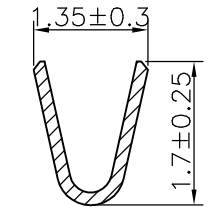

Section A–A

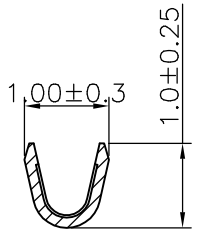

Section B–B

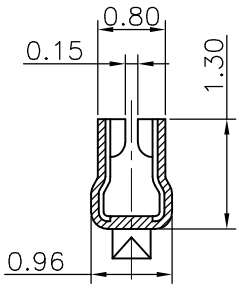

Section C–C

Note:11251TOP–XX–D–NK

NK:无印字

表示：D TYPE

Finish

2E––Tin–plated

5A––Gold flash

Part No	Wire Range	Insulation O.D	Material	Finish	Qty/reel
11251TOP–2E–D–NK	AWG#28~#32	1.00mm(Max)	Phosphor Bronze	Ni 30u"Min Tin 100u"Min	15,000pcs
11251TOP–5A–D–NK	AWG#28~#32	1.00mm(Max)	Phosphor Bronze	Gold flash	15,000pcs

REV.	REVISION RECORD	DATE
C0	新图面发行	13.11.26
C1	新增电镀规格	16.11.07
C2	更换公司名称	16.12.26

UNIT: MM

SIZE: A4

GENERAL TOLERANCES	
LINEAR	ANGLES
0.0±0.25	X° REF±6°
0.00±0.15	X° ±3°
0.000±0.08	X° X'±2°

SCALE: 1:1	NAME	DATE
APPROVED	郭正桃	16.12.26
DESIGNER	伍文聪	16.12.26
DRAWN	邓群庄	16.12.26

JCTC® 胜蓝科技股份有限公司

TERMINAL&CONNECTORS东莞市富智达电子科技有限公司

TITLE: MX1.25 端子

PART.NO: 11251TOP-XX-D-NK

DWG.NO: ENDE05

REV: C2 SHEET: 1/1

环保物料

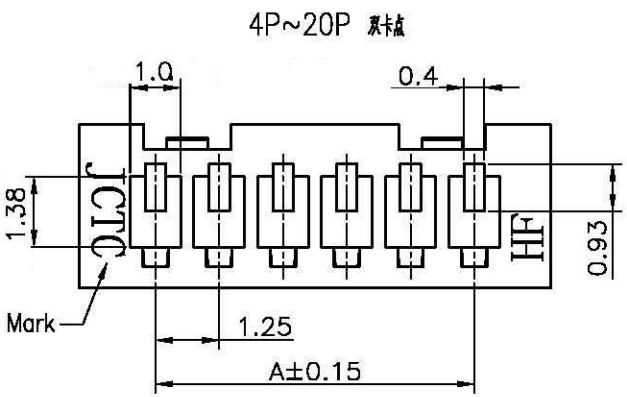

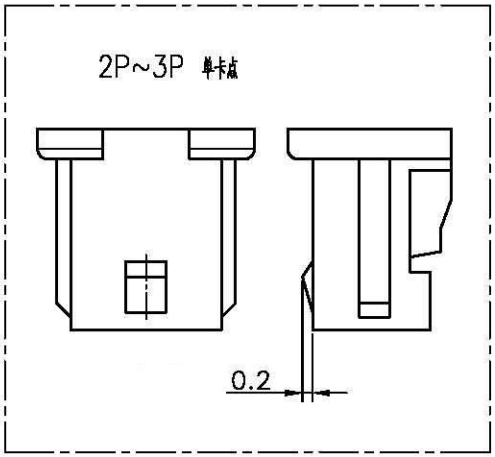

Specifications:
Rated Voltage : 125V AC/DC
Rated Current : 1A AC,DC
Withstand Voltage : 250V AC/minute
Contact Resistance : 20mΩ(MAX.)
Insulation Resistance : 100MΩ(MIN.)
Temperature Range :-40°C~+85°C

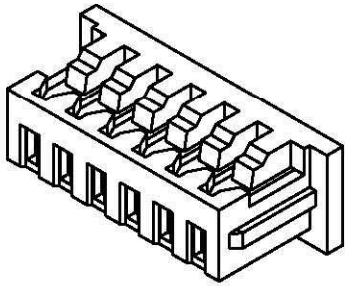

Dimensional Ordering Infarmation:

Part No	Dimensions A	B	C
2P		3.00	4.25
3P	2.50	4.25	5.50
4P	3.75	5.50	6.75
5P	5.00	6.75	8.00
6P	6.25	8.00	9.25
7P	7.50	9.25	10.50
8P	8.75	10.50	11.75
9P	10.00	11.75	13.00
10P	11.25	13.00	14.25
11P	12.50	14.25	15.50
12P	13.75	15.50	16.75
13P	15.00	16.75	18.00
14P	16.25	18.00	19.25
15P	17.50	19.25	20.50
16P	18.75	20.50	21.75
17P	20.00	21.75	23.00
18P	21.25	23.00	24.25
19P	22.50	24.25	25.50
20P	23.75	25.50	26.75

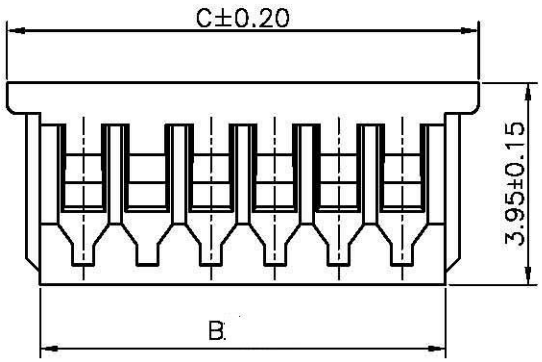

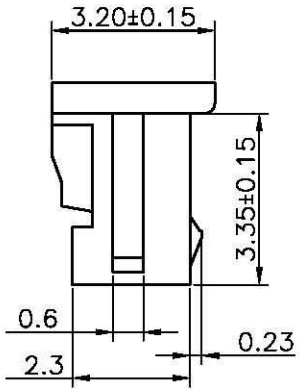

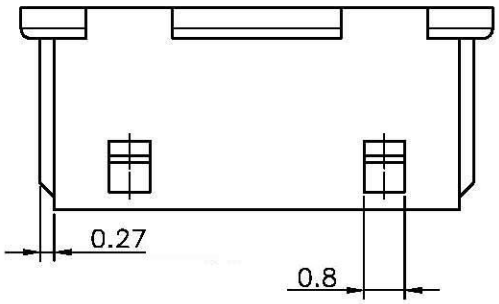

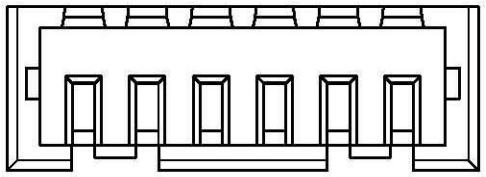

11251H00-NPX-XX-HF-NK
① ② ③④ ⑤ ⑥ ⑦

① Series No.
② H90 : Side Contact
H00 : Up Contact
③ No. of Circuits
④ X : Product color(A--Y)
Blank : Natural type
⑤ PT : PBT
Blank : Nylon 66
⑥ HF : Halogen Free
⑦ NK : No Mark
Blank : Mark

Suitable for JCTC 11251 series terminal

Part No.	Material	Color
11251H00-NP	Nylon 66,UL94V-0	本色
11251H00-NP-NK	Nylon 66,UL94V-0	本色
11251H00-NP-PT	PBT,UL94V-0	本色
11251H00-NP-HF	Nylon 66,UL94V-0	本色
11251H00-NP-HF-NK	Nylon 66,UL94V-0	本色
11251H00-NPA	Nylon 66,UL94V-0	黑色
11251H00-NPA-NK	Nylon 66,UL94V-0	黑色
11251H00-NPE	Nylon 66,UL94V-0	黄色
11251H00-NPE-NK	Nylon 66,UL94V-0	黄色

版次REV.	日 期 DATE	变 更 内 容 DESCRIPTION	审 核 CHK.	核 准 APPD.
C1	10.08.03	图面整理	龚友连	王志刚
C0	09.11.25	换图框发行	龚友连	唐海江

一般公差GENERAL TOLERANCE
X.X ±0.25 X° ±5°
X.XX ±0.15 X.X' ±2'
X.XXX ±0.08 ▲ MAJOR DIM.
单位UNIT mm

绘 图 DR.	陈 千
校 对 CHK.	欧阳小强
审 核 CHK.	龚友连
核 准 APPD.	王志刚

JCTC 东莞市胜蓝电子有限公司
——富强电子厂——

品名TITLE
MX 1.25mm PITCH HOUSING

料号 PART NO.
11251H00-NPX-XX-XX-XX
文件编号 NUMBER
ENDE05

比例SCALE	SHEET	版次 REV.
1/1	1/1	C1

ONLINE CERTIFICATIONS DIRECTORY



ECBT2.E338796
Connectors for Use in Data, Signal, Control and Power Applications - Component

If you notice a change to your ECBT2 Listing Card, click here to learn more.

Page Bottom

Connectors for Use in Data, Signal, Control and Power Applications - Component

See General Information for Connectors for Use in Data, Signal, Control and Power Applications - Component

SHENGLAN TECHNOLOGY CO LTD E338796
No.4 Hexing Rd
Shatou Southern District
Changan Town
Dongguan, Guangdong 523846 CHINA

Connectors, Model(s) Cat. No. 11002H00, follow by -2X, follow by 5, 6, 8, 9, 10, 12, 15, 17, 18, 20, 25, follow by P, follow by A thru Z or 1 thru 9, follow by -A thru -Z or -1 thru -9, follow by A thru Z or 1 thru 9, follow by -A thru -Z, follow by A thru Z.

Connectors, Model(s) Cat. No. 11002W00, follow by -2X, follow by 5, 6, 8, 9, 10, 12, 15, 20, 25, follow by P, follow by A thru Z or 1 thru 9, follow by -A thru -Z or -1 thru -9, follow by A thru Z or 1 thru 9, follow by -A thru -Z, follow by A thru Z.

Connectors, Model(s) Cat. No. 11002W90, follow by -2X, follow by 5, 6, 8, 9, 10, 15, 20, 25, follow by P, follow by A thru Z or 1 thru 9, follow by -A thru -Z or -1 thru -9, follow by A thru Z or 1 thru 9, follow by -A thru -Z, follow by A thru Z.

Connectors, Model(s) Cat. No. 11004H, followed by -2x10 or -2x15, followed by PL.

Connectors, Model(s) Cat. No. 11006H00, followed by -2X10, -2X15 or -2X20, followed by P.

Connectors, Model(s) Cat. No. 11252H, followed by -2x, followed by 5, 10, 15 or 20, followed by P.

Connectors, Model(s) Cat. No. 11252W, followed by -2X, followed by 5, 10, 15 or 20, followed by P.

Connectors, Model(s) Cat. No. 11253H, followed by -20 or -30, followed by P.

Connectors, Model(s) Cat. No. 11253W, followed by -20 or -30, followed by P.

Connectors, Model(s) Cat. No. 11258H00, follow by -4, -5, -6, -7, -8, -9, -10, -11, -12, -13, -14, -15, -20, follow by P, follow by A thru Z or 1 thru 9, follow by -L, follow by -A thru -Z or -1 thru -9, follow A thru Z or 1 thru 9.

Connectors, Model(s) Cat. No. 11258W90, follow by -S, follow by -4, -5, -6, -7, -8, -9, -10, -11, -12, -13, -14, -15, -20, follow by P, follow by A thru Z or 1 thru 9, follow by -L, follow by -A thru -Z or -1 thru -9, follow by A thru Z or 1 thru 9.

Connectors, Model(s) Cat. No. 11500H00, followed by -2 thru -15, followed by P.

Connectors, Model(s) Cat. No. 11500W00, followed by -2 thru -15, followed by P.

Connectors, Model(s) Cat. No. 12002H00, follow by -2 thru -16, follow by P, follow by A thru Z or 1 thru 9, follow by -L, follow by -A thru -Z or -1 thru -9, follow by A thru Z or 1 thru 9.

Connectors, Model(s) Cat. No. 12002W00, follow by -2 thru -16, follow by P, follow by A thru Z or 1 thru 9, follow by -L, follow by -A thru -Z or -1 thru -9, follow by A thru Z or 1 thru 9.

Connectors, Model(s) Cat. No. 12002W90, follow by -2 thru -16, follow by P, follow by A thru Z or 1 thru 9, follow by -L, follow by -A thru -Z or -1 thru -9, follow by A thru Z or 1 thru 9.

Connectors, Model(s) Cat. No. 12003H, followed by -2x, followed by 2 thru 17, followed by P.

Connectors, Model(s) Cat. No. 12009H00, followed by -2X2, -2X3 or -2X4, followed by P.

Connectors, Model(s) Cat. No. 12504H00, followed by -2 thru -15, followed by P, followed by -L.

Connectors, Model(s) Cat. No. 12505H00, followed by -2 thru -15 or -20, followed by P.

Connectors, Model(s) Cat. No. 12505W00, follow by -2 thru -15, follow by P, follow by A thru Z or 1 thru 9, follow by -A thru -Z or -1 thru -9, follow by -A thru -Z or -1 thru -9, follow by A thru Z or 1 thru 9, follow by -A thru -Z, follow by A thru Z.

Connectors, Model(s) Cat. No. 12505W90, follow by -2 thru -15, follow by P, follow by A thru Z or 1 thru 9, follow by -A thru -Z or -1 thru -9, follow by -A thru -Z or -1 thru -9, follow by A thru Z or 1 thru 9, follow by -A thru -Z, follow by A thru Z.

Connectors, Model(s) Cat. No. 12541H, followed by -2x, followed by 1 thru 20, followed by P.

Connectors, Model(s) Cat. No. 12543H, followed by -2 thru -20, followed by P.

Connectors, Model(s) Cat. No. 12547H00, followed by -3 thru -8, followed by P.

Connectors, Model(s) Cat. No. 13502W90, followed by -2P, followed by A thru Z, followed by -A thru -Z, or -0 thru -9, followed by -A thru -Z, or -0 thru -9, followed by -A thru -Z, or -0 thru -9, followed by -A thru -Z, or -0 thru -9.

Connectors, Model(s) Cat. No. 13962H00, 13962W00 and 13962W90, followed by -2P thru -10P, followed by A thru Z, followed by -A thru -Z, or -0 thru -9, followed by -A thru -Z, or -0 thru -9.

Connectors, Model(s) Cat. No. 22001H, followed by -2 thru -16, followed by P.

Connectors, Model(s) Cat. No. 22501H, followed by -2 thru -14, followed by P.

Connectors, Model(s) Cat. Nos. 10500H and 10500W, followed by -41 or -51, followed by P.

Connectors, Model(s) Cat. Nos. 11001H and 11001W, followed by -30, followed by P.

Connectors, Model(s) Cat. Nos. 11002H and 11002W, followed by -2 thru -20, followed by P.

Connectors, Model(s) Cat. Nos. 11003H and 11003W, followed by -2 thru -30, followed by P.

Connectors, Model(s) Cat. Nos. 11005H and 11005W, followed by -2X, followed by 2 thru 25, followed by P.

Connectors, Model(s) Cat. Nos. 11251H and 11251W, followed by -2 thru -15, followed by P.

Connectors, Model(s) Cat. Nos. 11254H00, 12006H, 12006W, 12504H and 12504W, followed by -2 thru -15, followed by P.

Connectors, Model(s) Cat. Nos. 11255H, 11255W, 11256H and 11256W, followed by -2 thru -30, followed by P.

Connectors, Model(s) Cat. Nos. 11257H, follow by -4 thru -15, followed by PL.

Connectors, Model(s) Cat. Nos. 11257W, 12503H00 and 12503W00, follow by -2 thru -15, followed by P.

Connectors, Model(s) Cat. Nos. 11501H and 11501W, followed by -2 thru -13, followed by P.

Connectors, Model(s) Cat. Nos. 11501H00 and 11501W00, followed by -14 or -15, followed by P.

Connectors, Model(s) Cat. Nos. 12001H and 12001W, followed by -2 thru -16, followed by P.

Connectors, Model(s) Cat. Nos. 12002H and 12002W, followed by -2x, followed by 2 thru 15, followed by P.

Connectors, Model(s) Cat. Nos. 12004H, 12004W and 12005W, follow by -2 thru -16, followed by P.

Connectors, Model(s) Cat. Nos. 12005H, follow by -2 thru -16, followed by PL.

Connectors, Model(s) Cat. Nos. 12501H and 12501W, followed by -2 thru -16, followed by P.

Connectors, Model(s) Cat. Nos. 12502H and 12502W, followed by -2 thru -15, followed by P.

Connectors, Model(s) Cat. Nos. 50801H and 50801W, follow by -2 thru -24, followed by P.

Connectors, Model(s) Cat. Nos. 51274H-7P and 51275H-7P.

Model(s) BCUM-200A-PE, BICF-200A-PE, HS-0021-PC-GY, HS-0023-PC-GY

Marking: Company name and model designation on the device or carton.
Last Updated on 2018-11-15

© 2018 UL LLC

The appearance of a company's name or product in this database does not in itself assure that products so identified have been manufactured under UL's Follow-Up Service. Only those products bearing the UL Mark should be considered to be Certified and covered under UL's Follow-Up Service. Always look for the Mark on the product.

UL permits the reproduction of the material contained in the Online Certification Directory subject to the following conditions: 1. The Guide Information, Assemblies, Constructions, Designs, Systems, and/or Certifications (files) must be presented in their entirety and in a non-misleading manner, without any manipulation of the data (or drawings). 2. The statement "Reprinted from the Online Certifications Directory with permission from UL" must appear adjacent to the extracted material. In addition, the reprinted material must include a copyright notice in the following format: "© 2018 UL LLC".

This document is the property of Tarng Yu Enterprise and is delivered on the express condition that it is not to be disclosed, reproduced or used, in whole or in part, for manufacture or sale by anyone other than Tarng Yu Enterprise without its prior consent, and that no right is granted to disclose or to use any information in this document.

REV	ECN NO.	DESCRIPTION	DATE	APP'D
C/3	N/A	ADD FINISH PLATED(B*)	12/25/19'	Paul
C/4	N/A	TEST POINT OF PLATE	09/09/24'	Paul
C/5	N/A	MODIFY FINISH PLATED (B*:50u" NICKEL PLATED)	05/10/25'	Chuer Xie

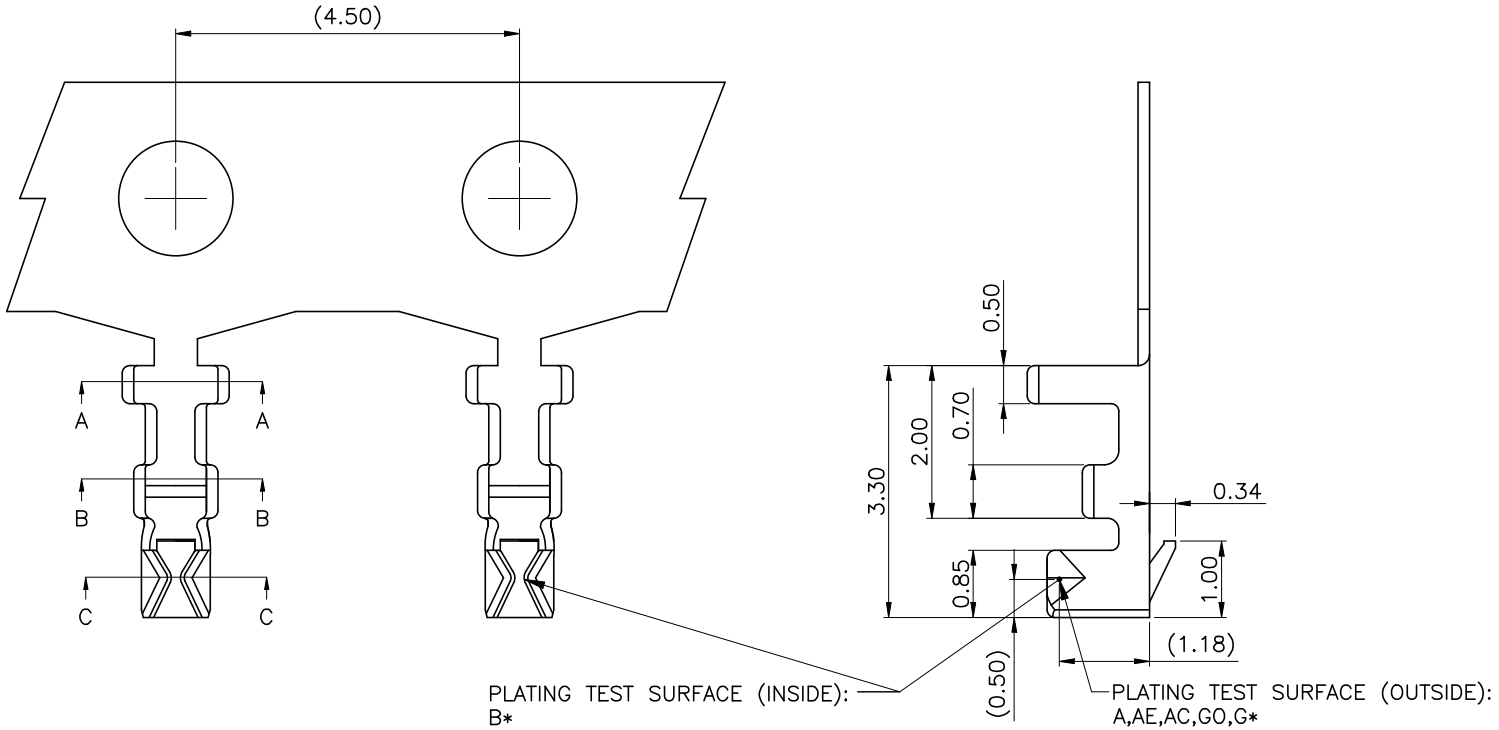

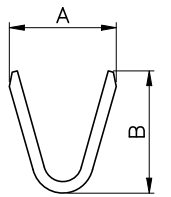

Section A–A

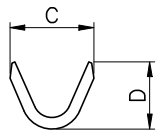

Section B–B

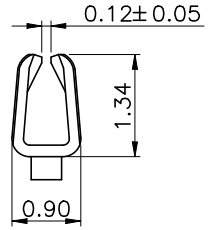

Section C–C

CONTACT INFORMATION:

Part No.	Wire Range	Insulation O.D.	DIM.(mm)			
			A	B	C	D
TU1252TPO–X	AWG#28~#32	ø0.50~1.00mm	1.40	1.60	1.10	0.90
TU1252TPL–X	AWG#32~#34	ø0.40~0.60mm	1.20	1.00	1.10	0.90
TU1252TPH–X	AWG#26~#28	ø1.00mm(Max.)	1.40	1.60	1.20	1.10

NOTES:
1. MATERIAL: PHOSPHOR BRONZE, t=0.15mm
2. FINISH: A--TIN-PLATED OVER 15u"NICKEL
   AE--PRESSING BEFORE BRIGHT-60u"TIN PLATED OVER 15u"NICKEL
   AC--PRESSING BEFORE MATTE-60u"TIN PLATED OVER 15u"NICKEL
   GO--GOLD FLASH OVER 15u"NICKEL
   G*--GOLD *u" OVER 50u" NICKEL
   B*--*u" TIN PLATED ON CONTACT AREA INSIDE, OVER 50u"NICKEL
3. APPLICABLE WIRE RANGE: SEE CONTACT INFORMATION
4. INSULATION O.D.: SEE CONTACT INFORMATION
5. USE WITH: TU1252 SERIES HOUSING
6. ORDERING CODE: TU1252TPX-X
   O--STANDARD
   L--LOW CRIMP HEIGHT
   H--HIGH CRIMP HEIGHT
   FINISH SEE NOTE 2

TOLERANCE	
X.X	±0.25
X.XX	±0.15
ANGULAR	3'
UNLESS OTHERWISE SPECIFIED	

APPROVALS		DATE
DRAWN	Chuer Xie	05/15/25'
CHK'D	Carter Shi	05/15/25'
APP'D	Paul Chen	05/15/25'
UNITS mm	SCALE 1:1	SIZE: A4

唐虞企業股份有限公司
TARNG YU ENTERPRISE CO., LTD.

PART NO.	TU1252TPX-X
DRAWING NO.	EN-TU1252TPX-X
SHEET 1 OF 2	

TITLE:
WIRE TO BOARD,
PITCH 1.25mm, CRIMP TYPE,
CONTACT

REV. C/5

This document is the property of Tarng Yu Enterprise and is delivered on the express condition that it is not to be disclosed, reproduced or used, in whole or in part, for manufacture or sale by anyone other than Tarng Yu Enterprise without its prior consent, and that no right is granted to disclose or to use any information in this document.

REV	ECN NO.	DESCRIPTION	DATE	APP'D
C/2	N/A	ADD FINISH(MATTE TIN) AND ADD HIGH CRIMP HEIGHT SPECIFICATION	04/07/16'	Paul
C/3	N/A	ADD FINISH PLATED(B*)	12/25/19'	Paul
C/4	N/A	TEST POINT OF PLATE	09/09/24'	Paul

PCAKING MATERIAL

PART NAME	DIM(mm)
CARTON	470*470*210

PCAKING CAPACITY

PART NO.	PCS/RE	RE/BC	PCS/BC
TU1252TPX-X	15,000PCS/RE	8 RE/BC	120,000 PCS/BC

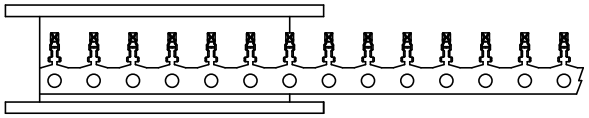

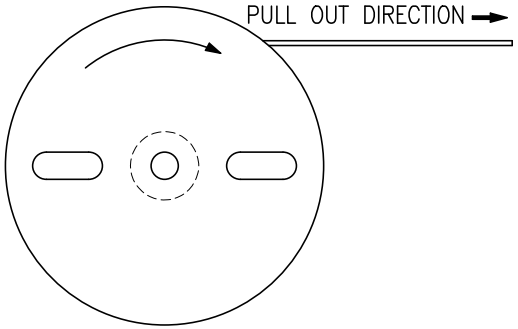

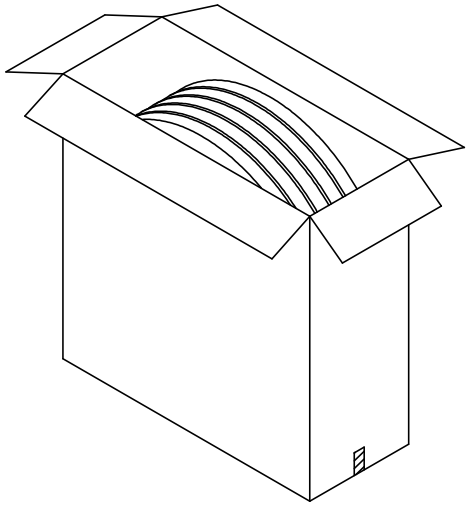

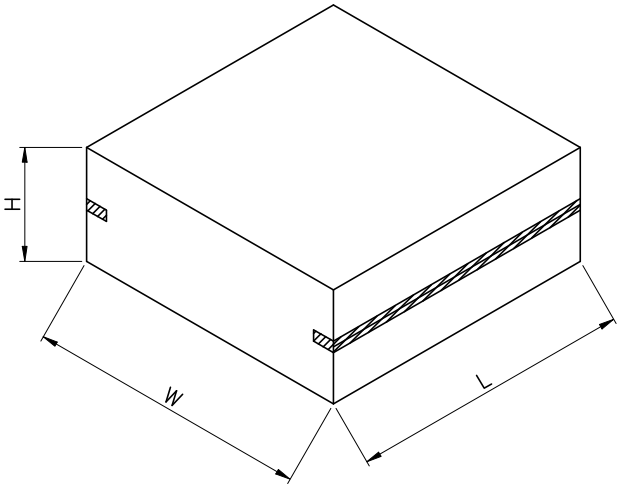

TOLERANCE		APPROVALS		DATE	
X.X	±0.25	DRAWN	Chuer Xie	05/15/25'	唐虞企業股份有限公司 TARNG YU ENTERPRISE CO., LTD.
X.XX	±0.15	CHK'D	Carter Shi	05/15/25'	PART NO. TU1252TPX-X
ANGULAR	3'	APP'D	Paul Chen	05/15/25'	DRAWING NO. EN-TU1252TPX-X
UNLESS OTHERWISE SPECIFIED		UNITS mm	SCALE 1:1	SIZE: A4	SHEET 2 OF 2

TITLE: WIRE TO BOARD, PITCH 1.25mm, CRIMP TYPE, CONTACT

REV. C/5

This document is the property of Tarng Yu Enterprise and is delivered on te express condition that it is not to be disclosed, reproduced or used, in whole or in part, for manufacture or sale by anyone other than Tarng Yu Enterprise without its prior consent, and that no right is granted to disclose or to use any information in this document.

Engineer Drawing

REV	ECN NO.	DESCRIPTION	DATE	DRAWN
C/3	N/A	ADD 20PIN SPECIFICATION	09/23/14'	Ziwen Kong
C/4	N/A	ADD 17~19PIN SPECIFICATION	08/26/19'	Cong Wang

COLOR TABLE	
(VOID)	WHITE
C1	BLACK
C2	BROWN
C3	RED
C4	ORANGE
C5	YELLOW
C6	GREEN
C7	BLUE
C8	PURPLE
C9	GREY
CW	DARK RED
CM	CREAM

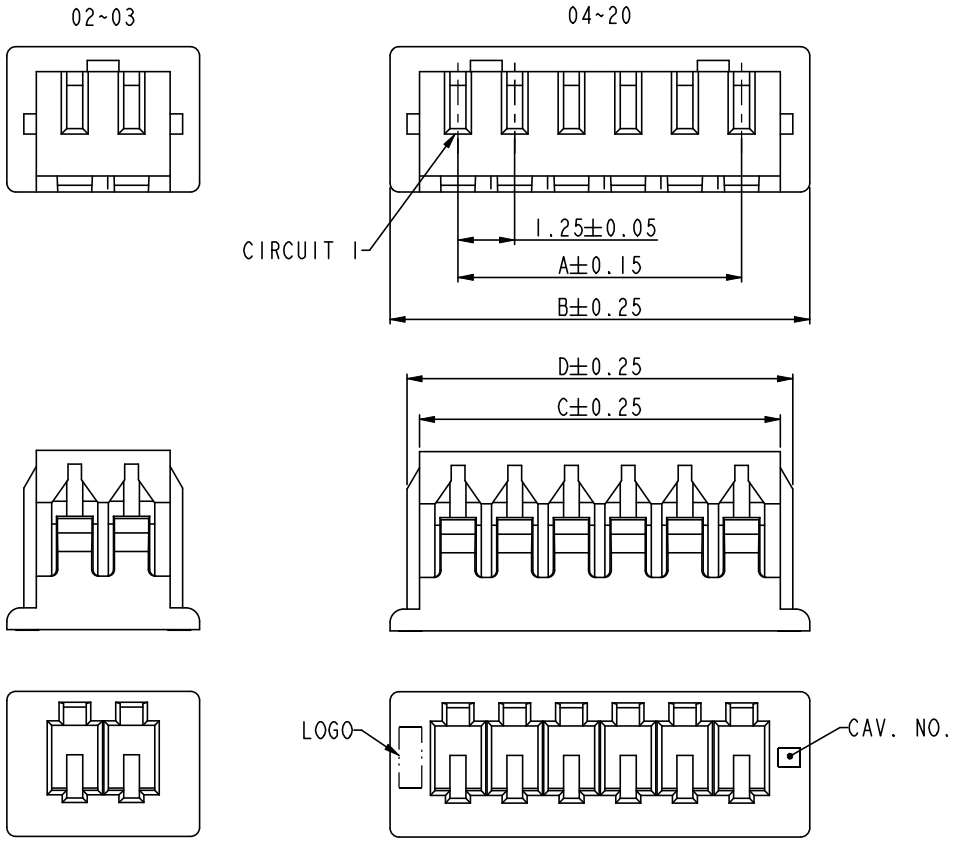

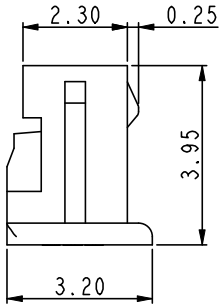

PIN	A	B	C	D
02	--	4.25	2.95	3.50
03	2.50	5.50	4.20	4.75
04	3.75	6.75	5.45	6.00
05	5.00	8.00	6.70	7.25
06	6.25	9.25	7.95	8.50
07	7.50	10.50	9.20	9.75
08	8.75	11.75	10.45	11.00
09	10.00	13.00	11.70	12.25
10	11.25	14.25	12.95	13.50
11	12.50	15.50	14.20	14.75
12	13.75	16.75	15.45	16.00
13	15.00	18.00	16.70	17.25
14	16.25	19.25	17.95	18.50
15	17.50	20.50	19.20	19.75
16	18.75	21.75	20.45	21.00
17	20.00	23.00	21.70	22.25
18	21.25	24.25	22.95	23.50
19	22.50	25.50	24.20	24.75
20	23.75	26.75	25.45	26.00

INDEX	PART NAME	MATERIAL
1	HOUSING	(HF) NYLON 66, UL94-V0; COLOR: SEE ORDERING CODE

NOTES

1. USE WITH: TUI252 CRIMP TERMINAL
2. MATES WITH: TUI252 SERIES WAFER / TYI252 FEMALE HOUSING
3. ORDERING CODE: TUI252HNO-NP-X-NL

NO. OF PINS
02: 2 PINS
03: 3 PINS
...

INSULATION COLOR
SEE COLOR TABLE

HALOGEN FREE

TOLERANCE

X.X ±0.25

X.XX ±0.15

ANGULA 3°

UNLESS OTHERWISE SPECIFIED

APPROVALS	DATE
DRAWN Cong Wang	08/26/19'
CHK'D Carter Shi	08/26/19'
APP'D Paul Chen	08/26/19'

UNITS mm | SCALE 1.000 | SIZE:A4 | SHEET 1 OF 2

唐虞企業股份有限公司
TARNG YU ENTERPRISE CO., LTD.

PART NO. TUI252HNO-NP-X-NL

DRAWING NO. EN-TUI252HNO-NP-X-NL

TITLE:
W TO B CONNECTOR,
PITCH 1.25 mm, SINGLE ROW,
CRIMP, INSULATOR

REV.C/4

This document is the property of Tarng Yu Enterprise and is delivered on te express condition that it is not to be disclosed, reproduced or used, in whole or in part, for manufacture or sale by anyone other than Tarng Yu Enterprise without its prior consent, and that no right is granted to disclose or to use any information in this document.

Engineer Drawing

REV	ECN NO.	DESCRIPTION	DATE	DRAWN
C/3	N/A	ADD 20PIN SPECIFICATION	09/23/14'	Ziwen Kong
C/4	N/A	ADD 17~19PIN SPECIFICATION	08/26/19'	Cong Wang

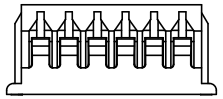

CONNECTOR

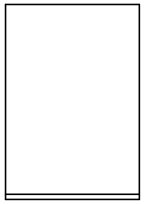

BAG

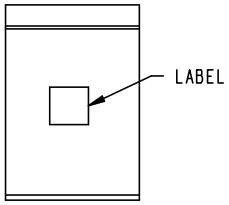

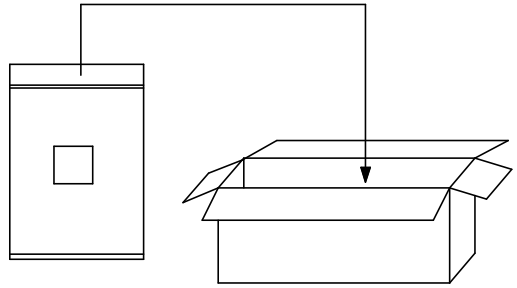

CARTON

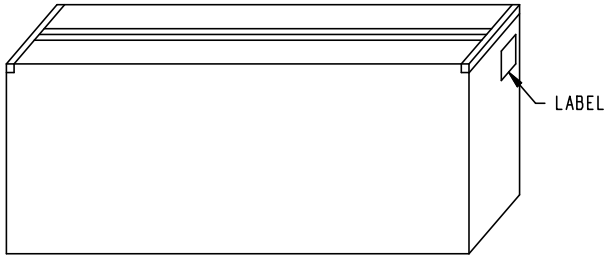

PIN	PCS/BAG	BAG/BC	PCS/BC	PIN	PCS/BAG	BAG/BC	PCS/BC
02	1000	200	200000	12	1000	60	60000
03	1000	180	180000	13	1000	60	60000
04	1000	180	180000	14	1000	60	60000
05	1000	150	150000	15	1000	60	60000
06	1000	140	140000	16	1000	60	60000
07	1000	100	100000	17	1000	60	60000
08	1000	80	80000	18	1000	60	60000
09	1000	80	80000	19	1000	60	60000
10	1000	80	80000	20	1000	60	60000
11	1000	80	80000				

NOTES
1. MATERIAL:
   CARTON: FIBREBOARD, CORRUGATED, DOUBLE WALL.
   PE BAG: POLYETHYLENES, TRANSPARENT COLOR.
2. CARTON DIMENSION: 400*280*280

TOLERANCE	APPROVALS	DATE	唐虞企業股份有限公司 TARNG YU ENTERPRISE CO., LTD.	
X.X ±0.25	DRAWN Cong Wang	08/26/19'		
X.XX ±0.15	CHK'D Carter Shi	08/26/19'	PART NO. TUI252HNO-NP-X-NL	TITLE: W TO B CONNECTOR, PITCH 1.25 mm, SINGLE ROW, CRIMP, INSULATOR
ANGULA 3°	APP'D Paul Chen	08/26/19'	DRAWING NO. EN-TUI252HNO-NP-X-NL	
UNLESS OTHERWISE SPECIFIED	UNITS mm SCALE 1.000	SIZE:A4	SHEET 2 OF 2	REV.C/4

UL Product iQ™

ECBT2.E191023 - Connectors for Use in Data, Signal, Control and Power Applications - Component

Connectors for Use in Data, Signal, Control and Power Applications - Component

See General Information for Connectors for Use in Data, Signal, Control and Power Applications - Component

TARNG YU ENTERPRISE CO LTD E191023
43 WU-CHUN 6TH RD
WU-KU INDUSTRIAL PARK
NEW TAIPEI, 248 TAIWAN

Connectors, Model(s) TB1262HNO, followed by 1X, followed by 2 through 15 or 02 through 09, may be followed by 1 through 15 alphanumeric code

Connectors, Model(s) TB1561HNV and TB1561HNR, followed by 02 through 13, may be followed by P, may be followed by 1 through 15 alphanumeric code

Connectors, Model(s) TB2061, followed by HNV, followed by 2 through 16 or 02 through 09, may be followed by P, may be followed by 1 through 15 alphanumeric code

Connectors, Model(s) TB2061HNR, followed by 2 through 16 or 02 through 09, may be followed by P, may be followed by 1 through 15 alphanumeric code

Connectors, Model(s) TB3061, followed by HNR, followed by 2 through 16 or 02 through 09, may be followed by P, may be followed by 1 through 15 alphanumeric code

Connectors, Model(s) TB3061, followed by HNV, followed by 2 through 16 or 02 through 09, may be followed by P, C or PC, may be followed by 1 through 15 alphanumeric code

Connectors, Model(s) TB6061, followed by HNO, followed by 2 through 15 or 02 through 09, may be followed by P, may be followed by 1 through 15 alphanumeric code

Connectors, Model(s) TF2542HNO, followed by 1X, followed by 2 through 15 or 02 through 09, may be followed by 1 through 15 alphanumeric code

Connectors, Model(s) TL2080PPSR, followed by -AE, followed by -30, followed by 1 through 30 alphanumeric digits or blank

Connectors, Model(s) TL2460WNR, followed by -01 thru -03, may be followed by 2 or 5, may be followed by 1, 2, 3 or blank, may be followed by 1 through 10 alphanumeric codes or blank, may be followed by 0, may be followed by R or blank, may be followed by 1 through 30 alphanumeric codes.

Connectors, Model(s) TL2460WNR, followed by -01 thru -03, may be followed by 2 or 5, may be followed by 1, 2, 3 or blank, may be followed by 1 through 10 alphanumeric codes or blank, may be followed by 4, 8 or 9, may be followed by R or blank, may be followed by 1 through 30 alphanumeric codes.

Connectors, Model(s) TL2460WNR, followed by -01 thru -03, may be followed by S or blank, may be followed by D, may be followed by R, may be followed by A, B, C or blank, may be followed by 1 through 10 alphanumeric codes or blank, may be followed by M7, M10 or blank, may be followed by 1 through 30 alphanumeric codes.

Connectors, Model(s) TL2460WNR, followed by -01 thru -03, may be followed by S or blank, may be followed by R, may be followed by A, B, C or blank, may be followed by 1 through 10 alphanumeric codes or blank, may be followed by 1 through 30 alphanumeric codes.

Connectors, Model(s) TL3061WNR, followed by -01 thru -03, followed by 5, followed by 0 or 1, followed by one alphanumeric digit, followed by 0, followed by 1 through 30 alphanumeric digits or blank.

Connectors, Model(s) TL3061WNR, followed by -03, followed by 5, followed by 0 or 1, followed by one alphanumeric digit, followed by 1, followed by 1 through 30 alphanumeric digits or blank.

Connectors, Model(s) TL3061WNR, followed by -03, followed by 5, followed by 2 or 3, followed by one alphanumeric digit, followed by 0, followed by 1 through 30 alphanumeric digits or blank.

Connectors, Model(s) TL4060WNR followed by -01S thru -03S, may be followed by R or blank, may be followed by A thru E or blank, may be followed by 1 through 30 alphanumeric codes or blank.

Connectors, Model(s) TL4060WNR, followed by -01 thru -03, may be followed by 5, may be followed by 0 thru 5, may be followed by 1 through 10 alphanumeric codes or blank, may be followed by 0, may be followed by R or blank, may be followed by 1 through 30 alphanumeric codes or blank.

Connectors, Model(s) TL4060WNR, followed by -01 thru -03, may be followed by 5, may be followed by 0 thru 5, may be followed by 1 through 10 alphanumeric codes or blank, may be followed by 2, may be followed by R or blank, may be followed by 1 through 30 alphanumeric codes or blank.

Connectors, Model(s) TL4060WNR, followed by -01S thru -03S, may be followed by H or R, may be followed by A thru E or blank, may be followed by 1 through 10 alphanumeric codes or blank, may be followed by M7, may be followed by 1 through 30 alphanumeric codes or blank.

Connectors, Model(s) TP0501WNV followed by 20, 40 or 50, followed by F or M, may be followed by 1 through 15 alphanumeric code

Connectors, Model(s) TP1001WNV-41 followed by F or M, may be followed by 1 through 15 alphanumeric code

Connectors, Model(s) TP4522, followed by BE, R or S, followed by 3 through 12 or 03 through 09, may be followed by 1 through 15 alphanumeric code

Connectors, Model(s) TP6932, followed by BE, R or S, followed by 2 through 16 or 02 through 09, may be followed by P, may be followed by 1 through 15 alphanumeric code

Connectors, Model(s) TS2016HNO followed by -10, followed by 1 thru 2 alphanumeric digits or blank, followed by -1 thru 4 alphanumeric digits or blank, followed by -1 thru 2 alphanumeric digits or blank, followed by -1 thru 2 alphanumeric digits or blank, followed by -1 thru 2 alphanumeric digits or blank, followed by -1 thru 2 alphanumeric digits or blank, followed by -1 thru 2 alphanumeric digits or blank, followed by -1 thru 2 alphanumeric digits or blank, followed by -1 thru 2 alphanumeric digits or blank.

Connectors, Model(s) TS2016WNV followed by -10, followed by 1 thru 2 alphanumeric digits or blank, followed by 1 thru 2 alphanumeric digits or blank, followed by -1 thru 2 alphanumeric digits or blank, followed by 1 thru 2 alphanumeric digits or blank, followed by 1 thru 2 alphanumeric digits or blank, followed by -1 thru 2 alphanumeric digits or blank, followed by -1 thru 2 alphanumeric digits or blank, followed by -1 thru 2 alphanumeric digits or blank, followed by -1 thru 2 alphanumeric digits or blank, followed by -1 thru 2 alphanumeric digits or blank, followed by -1 thru 2 alphanumeric digits or blank, followed by -1 thru 2 alphanumeric digits or blank, followed by -1 thru 2 alphanumeric digits or blank.

Connectors, Model(s) TU or TF, followed by 5012HNO, followed by 2 through 28 or 02 through 09, may be followed by P, followed by L, N or Y, followed by T or E, followed by 2, 4, 6 or 8, followed by A or AE or GO, followed by two alphanumerical digits, may be followed by 1 through 15 alphanumeric code

Connectors, Model(s) TU or TF, followed by 6012HNO, followed by 2 through 25 or 02 through 09, may be followed by P, followed by L, N or Y, followed by T or E, followed by 0, 2, 4, 6 or 8, followed by A or AE or GO, followed by two alphanumerical digits, may be followed by 1 through 15 alphanumeric code

Connectors, Model(s) TU1001HNO, followed by 1X, followed by 02 through 15 or 20, may be followed by P, may be followed by 1 through 15 alphanumeric code

Connectors, Model(s) TU1001HNO, followed by 2X, followed by 10, 15, 20 or 25, may be followed by P, may be followed by 1 through 15 alphanumeric code

Connectors, Model(s) TU1001WNV and TU1001WNR, followed by 1X, followed by 02 through 15 or 20, may be followed by PS or S, may be followed by 1 through 15 alphanumeric code

Connectors, Model(s) TU1001WNV, followed by 2X10, 2X15, 2X20 or 2X25, may be followed by PS, S, SB or PSB, may be followed by 1 through 15 alphanumeric code

Connectors, Model(s) TU1003HNO, followed by 1X14, 1X20, 1X30 14, 20 or 30, may be followed by P, may be followed by 1 through 15 alphanumeric code

Connectors, Model(s) TU1003WNR, followed by 1X14, 1X20 or 1X30, 14, 20 or 30, may be followed by PS, S, SI or PSI, may be followed by 1 through 15 alphanumeric code

Connectors, Model(s) TU1007HNO, followed by 08, 14, 20 or 30, may be followed by P, B or PB, may be followed by 1 through 15 alphanumeric code

Connectors, Model(s) TU1007WNR, followed by 08, 14, 20 or 30, may be followed by P, followed by SB or SIB, may be followed by 1 through 15 alphanumeric code

Connectors, Model(s) TU1202HNO followed by -02 thru -12, followed by -M0, followed by one thru thirty alphanumeric digits or blank.

Connectors, Model(s) TU1202HNO, followed by -02K thru -12K, followed by one thru thirty alphanumeric digits or blank.

Connectors, Model(s) TU1202HNO, followed by -04, followed by one thru thirty alphanumeric digits or blank.

Connectors, Model(s) TU1202HNO, followed by -06B thru -09B, followed by one thru thirty alphanumeric digits or blank.

Connectors, Model(s) TU1202HNO-06A followed by one thru thirty alphanumeric digits or blank.

Connectors, Model(s) TU1202W, followed by N or G, followed by V, followed by -02 thru -12, followed by 00 or 02, followed by 01H16.

Connectors, Model(s) TU1202W, followed by N or G, followed by V, followed by -02 thru -12, followed by SA, followed by two alphanumeric digits or blank, followed by one thru thirty alphanumeric digits or blank.

Connectors, Model(s) TU1202W, followed by N or G, followed by V, followed by -04, followed by 0001H17.

Connectors, Model(s) TU1202W, followed by N or G, followed by V, followed by -04BA, followed by two alphanumeric digits or blank, followed by one thru thirty alphanumeric digits or blank.

Connectors, Model(s) TU1212HNO, followed by 2 through 30 or 02 through 09, may be followed by P, may be followed by 1 through 15 alphanumeric code

Connectors, Model(s) TU1212WBR, followed by 2 through 30 or 02 through 09, may be followed by PS or S, may be followed by 1 through 15 alphanumeric code

Connectors, Model(s) TU1213HNO followed by 2 through 10, 15, 20, 25, 30, 31 or 02 through 09, may be followed by P, may be followed by 1 through 15 alphanumeric code

Connectors, Model(s) TU1213WNR and TU1213WNV followed by 21 or 31, followed by PSBD or SBD, may be followed by 1 through 15 alphanumeric code

Connectors, Model(s) TU1213WNR and TU1213WNV followed by 5, 7, 9, 05, 07, 09, 11, 13, 15, 17, 19, 21 or 31, followed by PSD or SD , may be followed by 1 through 15 alphanumeric code

Connectors, Model(s) TU1213WNR followed by 2 through 10, 15, 20, 25, 30, 31 or 02 through 09, may be followed by PS or S, may be followed by 1 through 15 alphanumeric code

Connectors, Model(s) TU1213WNR followed by 20 or 30, may be followed by PSB, SB, SIB or PSIB, may be followed by 1 through 15 alphanumeric code

Connectors, Model(s) TU1217HNO, followed by 2 through 10, 12, 20, 25, 30 or 02 through 09, may be followed by P, may be followed by 1 through 15 alphanumeric code

Connectors, Model(s) TU1252, followed by HNO, followed by 2 through 15 or 02 through 09, may be followed by P, may be followed by 1 through 15 alphanumeric code

Connectors, Model(s) TU1252, followed by WNR or WNV, followed by 2 through 15 or 02 through 09, may be followed by P or PS or S, may be followed by 1 through 15 alphanumeric code

Connectors, Model(s) TU1253, followed by H, HNO, WNR or WNV, followed by 2 through 15 or 02 through 09, may be followed by P, may be followed by 1 through 15 alphanumeric code

Connectors, Model(s) TU1257, followed by HNO, may be followed by 2, 1X or 2X, followed by 2 through 15 or 20 or 02 through 09, may be followed by P, may be followed by 1 through 15 alphanumeric code

Connectors, Model(s) TU1257, followed by WNR or WNV, may be followed by 1 or 1X followed by 2 through 15 or 20 or 02 through 09, may be followed by P, may be followed by 1 through 15 alphanumeric code

Connectors, Model(s) TU1257, followed by WNV, followed by 2 or 2X, followed by 5through 15 or 20 or 05 through 09, may be followed by PS or S, may be followed by 1 through 15 alphanumeric code

Connectors, Model(s) TU1501, followed by HNO, WNR or WNV, followed by 2 through 13 or 02 through 09, may be followed by P, may be followed by 1 through 15 alphanumeric code

Connectors, Model(s) TU1501WNR and TU1501WNV, followed by 02 thru 13, may be followed by PS or S, may be followed by 1 through 15 alphanumeric code

Connectors, Model(s) TU1502HNO and TU1502WNR, followed by 02 or 03, may be followed by P, may be followed by 1 through 15 alphanumeric code

Connectors, Model(s) TU1503HNO followed by -03 thru -10, followed by 1 through 30 alphanumeric digits or blank.

Connectors, Model(s) TU1503WNR followed by -03 thru -10, followed by S, followed by A, B, C or blank, followed by G or blank, followed by 1 through 30 alphanumeric digits or blank.

Connectors, Model(s) TU1513HNO followed by -02 thru -10, followed by blank, "/", "." or 1 through 5 alphanumeric code in parentheses or not.

Connectors, Model(s) TU1513WNV followed by -02 thru -10, followed by S, followed by blank, "/", "." or 1 through 5 alphanumeric code in parentheses or not.

Connectors, Model(s) TU2001, followed by HNO, WNR or WNV, followed by 2 through 16 or 02 through 09, may be followed by P, may be followed by 1 through 15 alphanumeric code

Connectors, Model(s) TU2001WNR and TU2001WNV, followed by 02 thru 16, may be followed by PS or S, may be followed by 1 through 15 alphanumeric code

Connectors, Model(s) TU2002, followed by HNO, WNR or WNV, followed by 2 through 15 or 02 through 09, may be followed by P, may be followed by 1 through 15 alphanumeric code

Connectors, Model(s) TU2003, followed by HNO, may be followed by 1, 1X, 2 or 2X followed by 2 through 40, or 02 through 09, may be followed by P , may be followed by 1 through 15 alphanumeric code..

Connectors, Model(s) TU2003, followed by HNO, may be followed by 2 or 2X, followed by 4 through 40 or 04 through 09, may be followed by PR or R, may be followed by 1 through 15 alphanumeric code.

Connectors, Model(s) TU2003, followed by WNR, WNV, WBR or WBV, may be followed by 1, 1X, 2 or 2X, followed by 2 through 40 or 02 through 09, may be followed by P, may be followed by 1 through 15 alphanumeric code.

Connectors, Model(s) TU2004, followed by HNO, WNR or WNV, followed by 2 through 15 or 02 through 09, may be followed by P, may be followed by 1 through 15 alphanumeric code

Connectors, Model(s) TU2005, followed by HNO, WNR or WNV, followed by 2X, followed by 3 through 16 or 03 through 09, may be followed by P, may be followed by 1 through 15 alphanumeric code

Connectors, Model(s) TU2005HNO, TU2005WNV and TU2005WNR, followed by 2X02 thru 2X15, may be followed by PK or K, may be followed by 1 through 15 alphanumeric code

Connectors, Model(s) TU2006, followed by HNO or WNR, followed by 2 through 15 or 02 through 09, may be followed by P, may be followed by 1 through 15 alphanumeric code

Connectors, Model(s) TU2006, followed by WNV, followed by 2 through 15 or 02 through 09, may be followed by P or PF or F, may be followed by 1 through 15 alphanumeric code

Connectors, Model(s) TU2007HNO, TU2007WNV and TU2007WNR, followed by 2X, followed by 2 through 16 or 02 through 09, may be followed by P, may be followed by 1 through 15 alphanumeric code

Connectors, Model(s) TU2008HNO, TU2008WNV and TU2008WNR, followed by 02 thru 15, may be followed by P, may be followed by 1 through 15 alphanumeric code

Connectors, Model(s) TU2013HNO, followed by -02 thru -07, -11 or -12, followed by blank, "/", "." or 1 through 5 alphanumeric code in parentheses or not.

Connectors, Model(s) TU2013HNO-08 followed by blank, "/", "." or 1 through 5 alphanumeric code in parentheses or not.

Connectors, Model(s) TU2013HNO-09 followed by blank, "/", "." or 1 through 5 alphanumeric code in parentheses or not.

Connectors, Model(s) TU2013HNO-10 followed by blank, "/", "." or 1 through 5 alphanumeric code in parentheses or not.

Connectors, Model(s) TU2013WNR, followed by -02 thru -07, -11 or -12, followed by 1 through 2 alphanumeric digits or blank, followed by one alphanumeric digit or blank, followed by 0, 1 or blank, followed by one alphanumeric digit or blank, followed by 1 through 2 alphanumeric digits or blank, followed by 1 through 30 alphanumeric digits or blank.

Connectors, Model(s) TU2013WNR, followed by -02 thru -07, -11 or -12, followed by S, followed by 1 through 3 alphanumeric digits or blank, followed by 1 through 3 alphanumeric digits or blank, followed by -M8, -NL or blank, followed by blank, "/", "." or 1 through 3 alphanumeric code in parentheses or not.

Connectors, Model(s) TU2013WNR-08 followed by 1 through 2 alphanumeric digits or blank, followed by one alphanumeric digit or blank, followed by 0, 1 or blank, followed by one alphanumeric digit or blank, followed by 1 through 2 alphanumeric digits or blank, followed by 1 through 30 alphanumeric digits or blank.

Connectors, Model(s) TU2013WNR-08 followed by S, followed by 1 through 3 alphanumeric digits or blank, followed by 1 through 3 alphanumeric digits or blank, followed by -M8, -NL or blank, followed by blank, "/", "." or 1 through 3 alphanumeric code in parentheses or not.

Connectors, Model(s) TU2013WNR-09 followed by 1 through 2 alphanumeric digits or blank, followed by one alphanumeric digit or blank, followed by 0, 1 or blank, followed by one alphanumeric digit or blank, followed by 1 through 2 alphanumeric digits or blank, followed by 1 through 30 alphanumeric digits or blank.

Connectors, Model(s) TU2013WNR-09 followed by S, followed by 1 through 3 alphanumeric digits or blank, followed by 1 through 3 alphanumeric digits or blank, followed by -M8, -NL or blank, followed by blank, "/", "." or 1 through 3 alphanumeric code in parentheses or not.

Connectors, Model(s) TU2013WNR-10 followed by 1 through 2 alphanumeric digits or blank, followed by one alphanumeric digit or blank, followed by 0, 1 or blank, followed by one alphanumeric digit or blank, followed by 1 through 2 alphanumeric digits or blank, followed by 1 through 30 alphanumeric digits or blank.

Connectors, Model(s) TU2013WNR-10 followed by S, followed by 1 through 3 alphanumeric digits or blank, followed by 1 through 3 alphanumeric digits or blank, followed by -M8, -NL or blank, followed by blank, "/", "." or 1 through 3 alphanumeric code in parentheses or not.

Connectors, Model(s) TU2019HNO followed by -10, followed by one thru thirty alphanumeric digits or blank.

Connectors, Model(s) TU2019W followed by one thru two alphanumeric digits or blank, followed by R, followed by -10, followed by one thru thirty alphanumeric digits or blank, followed by one thru thirty alphanumeric digits or blank, followed by one alphanumeric digit or blank, followed by one thru thirty alphanumeric digits or blank.

Connectors, Model(s) TU3001, followed by HNO, WNR or WNV, followed by 2 through 15 or 20, or 02 through 09, may be followed by P, may be followed by 1 through 15 alphanumeric code

Connectors, Model(s) TU3002, followed by HNO, WNR or WNV, followed by 2 through 16 or 02 through 09, may be followed by P, may be followed by 1 through 15 alphanumeric code

Connectors, Model(s) TU3003, followed by HNO, WNR or WNV, followed by 2 through 15 or 02 through 09, may be followed by P, may be followed by 1 through 15 alphanumeric code

Connectors, Model(s) TU3004, followed by HNO, WNR or WNV, followed by 2 through 20 or 02 through 09, may be followed by P, may be followed by 1 through 15 alphanumeric code

Connectors, Model(s) TU3005, followed by HNO, WNR or WNV, followed by 2 through 13 or 02 through 09, may be followed by P, may be followed by 1 through 15 alphanumeric code

Connectors, Model(s) TU3006, followed by HNO, WNR or WNV, followed by 2 through 20 or 02 through 09, may be followed by P, may be followed by 1 through 15 alphanumeric code

Connectors, Model(s) TU3007, followed by HNO, WNR or WNV, followed by 2 through 15 or 02 through 09, may be followed by P, may be followed by 1 through 15 alphanumeric code

Connectors, Model(s) TU3008, followed by HNO, WNR or WNV, followed by 2 through 25 or 02 through 09, may be followed by P, may be followed by 1 through 15 alphanumeric code

Connectors, Model(s) TU3009HNO and TU3009WNV, followed by 02 thru 15, may be followed by P, may be followed by 1 through 15 alphanumeric code

Connectors, Model(s) TU3501HNO-02, may be followed by P, may be followed by 1 through 15 alphanumeric code

Connectors, Model(s) TU3501WNR-02, may be followed by PS or S, may be followed by 1 through 15 alphanumeric code

Connectors, Model(s) TU4001, followed by HNO, followed by 2 through 5 or 02 through 05, may be followed by P, may be followed by 1 through 15 alphanumeric code

Connectors, Model(s) TU4001, followed by WNR, followed by 2 through 5 or 02 through 05, may be followed by P, PS or S, maybe followed by 04, 08 or 12, may be followed by 1 through 15 alphanumeric code

Connectors, Model(s) TU5002, followed by HNO, followed by 2 through 20 or 02 through 09, may be followed by P, C or PC, may be followed by 1 through 15 alphanumeric code

Connectors, Model(s) TU5002, followed by WNR or WNV, followed by 2 through 20 or 02 through 09, may be followed by P, may be followed by 1 through 15 alphanumeric code

Connectors, Model(s) TU5003, followed by HNO, followed by 2 through 12 or 02 through 09, may be followed by P, may be followed by 1 through 15 alphanumeric code

Connectors, Model(s) TU5004, followed by HNO, followed by 2 through 6 or 02 through 06, may be followed by P, may be followed by 1 through 15 alphanumeric code

Connectors, Model(s) TU5004, followed by WNR or WNV, followed by 2 through 12 or 02 through 09, may be followed by P, may be followed by 1 through 15 alphanumeric code

Connectors, Model(s) TU5005, followed by HNO, followed by 2 or 2X, followed by 2 through 40 or 02 through 09, may be followed by P or PR or R, may be followed by 1 through 15 alphanumeric code

Connectors, Model(s) TU5005, followed by HNO, may be followed by 1 or 1X, followed by 2 through 40 or 02 through 09, may be followed by P, may be followed by 1 through 15 alphanumeric code

Connectors, Model(s) TU5005, followed by HNO, may be followed by 1 or 1X, followed by 4 or 04, followed by PK or K, may be followed by 1 through 15 alphanumeric code

Connectors, Model(s) TU5005, followed by WNR, WNV, WBR or WBV, may be followed by 1, 1X 2 or 2X, followed by 2 through 40 or 02 through 09, may be followed by P, may be followed by 1 through 15 alphanumeric code

Connectors, Model(s) TU5006, followed by HNO, may be followed by 1 or 1X, followed by 2 through 25 or 02 through 09, may be followed by P, PF, F, K or PK, may be followed by 1 through 15 alphanumeric code

Connectors, Model(s) TU5006, followed by WNR or WNV, may be followed by 1 or 1X, followed by 2 through 25 or 02 through 09, may be followed by P, may be followed by 1 through 15 alphanumeric code

Connectors, Model(s) TU6001, followed by HNO, WNR or WNV, followed by 2 through 12 or 02 through 09, may be followed by P, may be followed by 1 through 15 alphanumeric code

Connectors, Model(s) TU6002, followed by HNO, followed by 2 through 16 or 02 through 09, may be followed by P, may be followed by 1 through 15 alphanumeric code

Connectors, Model(s) TU6002, followed by WNR or WNV, followed by 2 through 16 or 02 through 09, may be followed by P, C or PC, may be followed by 1 through 15 alphanumeric code

Connectors, Model(s) TU6003HNO, followed by 06, followed by K, followed by 1 through 9 or 01 through 09, may be followed by 1 through 15 alphanumeric code

Connectors, Model(s) TU6003WNV, followed by 06 or 12, may be followed by P, F or PF, may be followed by 1 through 15 alphanumeric code

Connectors, Model(s) TU6004HNO, followed by 02 through 06, may be followed by P, may be followed by 1 through 15 alphanumeric code

Connectors, Model(s) TU6004WNV and TU6004WNR, followed by 02 through 06, may be followed by P, C or PC, may be followed by 1 through 15 alphanumeric code

Connectors, Model(s) TU6005HNO, followed by 02 through 09, may be followed by P, may be followed by 1 through 15 alphanumeric code

Connectors, Model(s) TU6005WNV and TU6005WNR, followed by 02 through 09, may be followed by P, C or PC, may be followed by 1 through 15 alphanumeric code

Connectors, Model(s) TU6007, TU6008, followed by HNO, WBV or WNV, followed by 1 through 6 or 01 through 06, may be followed by P, may be followed by 1 through 15 alphanumeric code

Connectors, Model(s) TY1081HNO, followed by 1, 2, 3, 1X, 2X or 3X, followed by 1 through 5 or 01 through 05, may be followed by P, may be followed by 1 through 15 alphanumeric code

Connectors, Model(s) TY1082HNO, followed by 1, 2, 3, 1X, 2X or 3X, followed by 1 through 5 or 01 through 05, may be followed by P, PW or W, may be followed by 1 through 15 alphanumeric code

Connectors, Model(s) TY1252HNO, followed by 02 through 10, may be followed by P, may be followed by 1 through 15 alphanumeric code

Connectors, Model(s) TY1381, followed by HNO followed by 2, 3, 4, 6, 9, 12, 15, 02, 03, 04, 06, 09, 1X02, 1X03, 1X04, 2X2, 2X02, 2X03, 3X03, 3X04 or 3X05, may be followed by P, may be followed by 1 through 15 alphanumeric code

Connectors, Model(s) TY1382, followed by HNO followed by 2 1X02, 2x2 or 2X02, may be followed by P, may be followed by 1 through 15 alphanumeric code

Connectors, Model(s) TY1382, followed by HNO followed by 2, 3, 4, 6, 9, 12, 15, 02, 03, 04, 06, 09, 1X02, 1X03, 1X04, 2X2, 2X02, 2X03, 3X03, 3X04 or 3X05, followed by PW or W, may be followed by 1 through 15 alphanumeric code

Connectors, Model(s) TY1501HNO, followed by 02 thru 13, may be followed by P, may be followed by 1 through 15 alphanumeric code

Connectors, Model(s) TY1581, followed by HNO followed by 2, 3, 4, 6, 9, 12, 15, 02, 03, 04, 06, 09, 1X02, 1X03, 1X04, 2X03, 3X03, 3X04 or 3x05, followed by PL or L, may be followed by 1 through 15 alphanumeric code

Connectors, Model(s) TY1581, TY1582, followed by HNO followed by 1, 2, 3, 4, 5, 6, 9, 12, 15, 01, 02, 03, 04, 05, 06, 09, 1X01, 1X02, 1X03, 1X04, 1X05, 2X2, 2X02, 2X03, 3X03, 3X04 or 3X05, may be followed by P, W or PW, may be followed by 1 through 15 alphanumeric code

Connectors, Model(s) TY1582, followed by HNO followed by 2, 3, 4, 6, 9, 12, 15, 02, 03, 04, 1X02, 1X03, 1X04, 2X03, 3X03, 3X04 or 3x05, followed by PL, L, LW or PLW, may be followed by 1 through 15 alphanumeric code

Connectors, Model(s) TY2081, followed by HNO followed by 1, 2, 3, 4, 6, 9, 12, 15, 01, 02, 03, 04, 06, 09, 1X01, 1X02, 1X03, 1X04, 2X2, 2X02, 2X03, 3X03, 3X04 or 3X05, may be followed by P, may be followed by 1 through 15 alphanumeric code

Connectors, Model(s) TY2082, followed by HNO followed by 1, 2, 3, 4, 6, 9, 12,15, 01, 02, 03, 04, 06, 09, 1X01, 1X02, 1X03, 1X04, 2X2, 2X02, 2X03, 3X03, 3X04 or 3X05, may be followed by P, W or PW, may be followed by 1 through 15 alphanumeric code

Connectors, Model(s) TY2083, TY2084, followed by HNO, followed by 2 through 10 or 02 through 09, may be followed by P, may be followed by 1 through 15 alphanumeric code

Connectors, Model(s) TY2361, followed by HNO, followed by 1X1, 1X2, 1X3, 1X4, 1X5, 2X2, 2X3, 3X3, 3X4, 3X5, 1X01, 1X02, 1X03, 1X04, 1X05, 2X02, 2X03, 3X03, 3X04 or 3X05, followed by PL or L, may be followed by 1 through 15 alphanumeric code

Connectors, Model(s) TY2361, TY2362, followed by HNO, followed by 1X1, 1X2, 1X3, 1X4, 1X5, 2X2, 2X3, 3X3, 3X4, 3X5, 1X01, 1X02, 1X03, 1X04, 1X05, 2X02, 2X03, 3X03, 3X04 or 3X05, may be followed by P, W or PW, may be followed by 1 through 15 alphanumeric code

Connectors, Model(s) TY2362, followed by HNO, followed by 1X1, 1X2, 1X3, 1X4, 2X3, 3X3, 3X4, 3X5, 1X01, 1X02, 1X03, 1X04, 2X03, 3X03, 3X04 or 3X05, followed by PL, L, LW or PLW, may be followed by 1 through 15 alphanumeric code

Connectors, Model(s) TY3081, TY3082, followed by HNO, followed by 2 through 12 or 02 through 09, may be followed by P, PW or W, may be followed by 1 through 15 alphanumeric code

Connectors, Model(s) TY3083, followed by HNO, followed by 2 through 20 or 02 through 09, may be followed by P, may be followed by 1 through 15 alphanumeric code

Connectors, Model(s) TY3084, followed by HNO, followed by 2 through 12 or 02 through 09, may be followed by P, may be followed by 1 through 15 alphanumeric code

Connectors, Model(s) TY3085HNO followed by -1x02 thru -1x12, followed by C, E or blank, followed by 1 through 30 alphanumeric digits or blank.

Connectors, Model(s) TY3085HNO followed by -2x01 thru -2x12, followed by D, E or blank, followed by 1 through 30 alphanumeric digits or blank.

Connectors, Model(s) TY3085HNO, followed by 1X02 thru 1X12 or 2X01 thru 2X12, may be followed by P, may be followed by 1 through 15 alphanumeric code

Connectors, Model(s) TY3086HNO followed by -1x02 thru -1x12, followed by C or blank, followed by 1 through 30 alphanumeric digits or blank.

Connectors, Model(s) TY3086HNO followed by -2x01 thru -2x12, followed by C or blank, followed by 1 through 30 alphanumeric digits or blank.

Connectors, Model(s) TY3086HNO, followed by 1X02 thru 1X12 or 2X01 thru 2X12, may be followed by P, W or PW, may be followed by 1 through 15 alphanumeric code

Connectors, Model(s) TY3086WNR followed by -1x02 thru -1x12, followed by 1 or 2, followed by F, followed by -0 thru -5, -A thru -F, -N or -P, followed by 1 through 30 alphanumeric digits or blank.

Connectors, Model(s) TY3086WNR followed by -1x02 thru -1x12, followed by 5, followed by 0, followed by -0 thru -5, -A thru -F, -N or -P, followed by 1 through 30 alphanumeric digits or blank.

Connectors, Model(s) TY3086WNR followed by -1x02 thru -1x12, followed by S, followed by -GO, -G3, -G5, -G10, -G15, -G30, -AC, -AC100, -AC150, -AE, -AE100, -AE150, -GOAC or -G15AC, followed by 1 through 30 alphanumeric digits or blank.

Connectors, Model(s) TY3086WNR followed by -2x01 thru -2x12, followed by 1 or 2, followed by F, followed by -0 thru -5, -A thru -F, -N or -P, followed by 1 through 30 alphanumeric digits or blank.

Connectors, Model(s) TY3086WNR followed by -2x01 thru -2x12, followed by 5, followed by 0, followed by -0 thru -5, -A thru -F, -N or -P, followed by 1 through 30 alphanumeric digits or blank.

Connectors, Model(s) TY3086WNR, followed by -2x01 thru -2x12, followed by F or S, followed by -GO, -G3, -G5, -G10, -G15, -G30, -AC, -AC100, -AC150, -AE, -AE100, -AE150, -GOAC or -G15AC, followed by 1 through 30 alphanumeric digits or blank.

Connectors, Model(s) TY3086WNR, followed by 1X02 thru 1X12, may be followed by PF, PS, F, S, SF or PSF, may be followed by 1 through 15 alphanumeric code

Connectors, Model(s) TY3086WNR, followed by 2X01 thru 2X12, followed by PF, PS, F, S, SE or PSE, may be followed by 1 through 15 alphanumeric code

Connectors, Model(s) TY3086WNV followed by -1x02 thru -1x12, followed by 1 or 4, followed by 0, followed by -0 thru -5, -A thru -F, -N or -P, followed by 1 through 30 alphanumeric digits or blank.

Connectors, Model(s) TY3086WNV followed by -1x02 thru -1x12, followed by S, followed by -GO, -G3, -G5, -G10, -G15, -G30, -AC, -AC100, -AC150, -AE, -AE100, -AE150, -GOAC or -G15AC, followed by 1 through 30 alphanumeric digits or blank.

Connectors, Model(s) TY3086WNV followed by -2x01 thru -2x12, followed by 1 or 4, followed by 0, followed by -0 thru -5, -A thru -F, -N or -P, followed by 1 through 30 alphanumeric digits or blank.

Connectors, Model(s) TY3086WNV followed by -2x01 thru -2x12, followed by S or blank, followed by -GO, -G3, -G5, -G10, -G15, -G30, -AC, -AC100, -AC150, -AE, -AE100, -AE150, -GOAC or -G15AC, followed by 1 through 30 alphanumeric digits or blank.

Connectors, Model(s) TY3086WNV, followed by 1X02 thru 1X12 or 2X01 thru 2X12, may be followed by P, PS, F, S, SE or PSE, may be followed by 1 through 15 alphanumeric code

Connectors, Model(s) TY3501HNO-02, may be followed by P, may be followed by 1 through 15 alphanumeric code

Connectors, Model(s) TY4001HNO, followed by 02 thru 05, may be followed by P, may be followed by 1 through 15 alphanumeric code

Connectors, Model(s) TY4281, followed by HNO, followed by 2x or 2X, followed by 1 through 12 or 01 through 09, may be followed by P, may be followed by 1 through 15 alphanumeric code

Connectors, Model(s) TY4282, followed by HNO, followed by 2x or 2X followed by 1 through 12 or 01 through 09, may be followed by P, W or PW, may be followed by 1 through 15 alphanumeric code

Connectors, Model(s) TY5006HNO, followed by 1X02 thru 1X12, may be followed by P, may be followed by 1 through 15 alphanumeric code

Connectors, Model(s) TY5083HNO-03, may be followed by P, may be followed by 1 through 15 alphanumeric code

Connectors, Model(s) TY5084HNO-03, followed by PA or A, may be followed by 1 through 15 alphanumeric code

Connectors, Model(s) TY5084HNO-03, may be followed by P, may be followed by 1 through 15 alphanumeric code

Connectors, Model(s) TY5085HNO-02, may be followed by P, may be followed by 1 through 15 alphanumeric code

Connectors, Model(s) TY5086HNO-02, may be followed by P, may be followed by 1 through 15 alphanumeric code

Connectors, Model(s) TY6351HNO and TY6352HNO, followed by 1X1, 1X2, 1X3, 1X4, 2X3, 3X3, 3X4, 3X5, 1X01, 1X02, 1X03, 1X04, 2X03, 3X03, 3X04 or 3X05, may be followed by P, may be followed by 1 through 15 alphanumeric code

Connectors, Model(s) TY8081, TY8082, followed by HNO, followed by 4 or 04, may be followed by P, may be followed by 1 through 15 alphanumeric code

Connectors, Model(s) TY8082, followed by WNR or WNV, followed by 4 or 04, may be followed by R, may be followed by 1 through 15 alphanumeric code

Model(s) Cat. No. TL3060WNV, followed by 2X02, followed by one thru thirty alphanumeric digits or blank.

Model(s) Cat. No. TU2015HNO, followed by -04 thru -12, followed by one thru thirty alphanumeric digits or blank.

Model(s) Cat. No. TU2015WGR, followed by -04 thru -12, followed by one thru thirty alphanumeric digits or blank.

Model(s) TP1251P followed by one alphanumeric digit or blank, followed by P, followed by -2X08, followed by one alphanumeric digit or blank, followed by one alphanumeric digit or blank, followed by one alphanumeric digit or blank, followed by one thru two alphanumeric digits or blank, followed by one thru thirty alphanumeric digits or blank.

Model(s) TP1251R followed by one alphanumeric digit or blank, followed by P, followed by -2X08, followed by one alphanumeric digit or blank, followed by one alphanumeric digit or blank, followed by one alphanumeric digit or blank, followed by one thru two alphanumeric digits or blank, followed by one thru thirty alphanumeric digits or blank.

Model(s) TS2016HNO, followed by -10, followed by -1 through -30 alphanumeric digits or blank.

Model(s) TS2016WNV, followed by -10, followed by 5, followed by 1 through 30 alphanumeric digits or blank, followed by -1 through -30 alphanumeric digits or blank, followed by 1 through 30 alphanumeric digits or blank, followed by 1 through 30 alphanumeric digits or blank, followed by 1 through 30 alphanumeric digits or blank.

Marking: Company name or tradename "TYU" and model designation on the device or carton.

Last Updated on 2020-02-19

在此資料庫中出現的公司名稱或產品，並不代表其產品本身的製造有經過UL 後續檢驗服務的把關。僅有附 UL 標誌的產品才可被視為取得認證，並涵蓋在UL 後續檢驗服務範疇裡。請務必確認產品上是否有此標誌。

UL 允許複製線上認證目錄中所包含的資料，但必須符合以下條件：1.指南資訊、零組件、構造、設計、系統和/或認證 (檔案) 必須以完整的方式呈現，且不得誤導、不得操弄這些資料 (或圖繪) 。2.「經 UL 許可自線上認證目錄轉載」的聲明，必須顯示在擷取的資料旁。此外，轉載的資料必須包含以下格式的版權聲明： "© 2020 UL LLC"