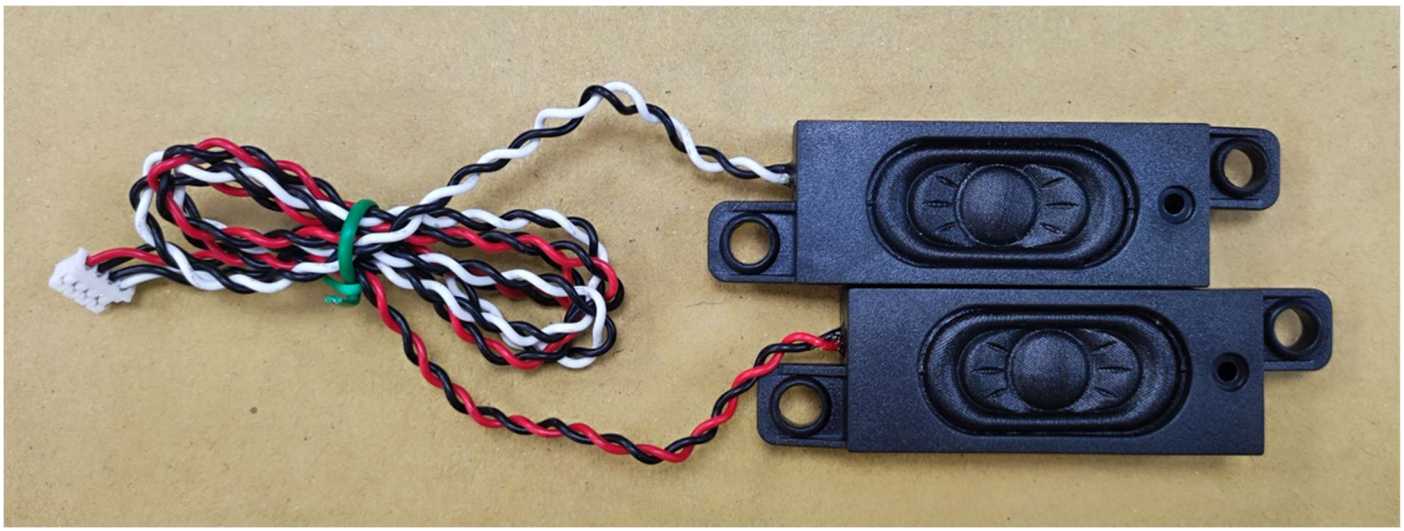

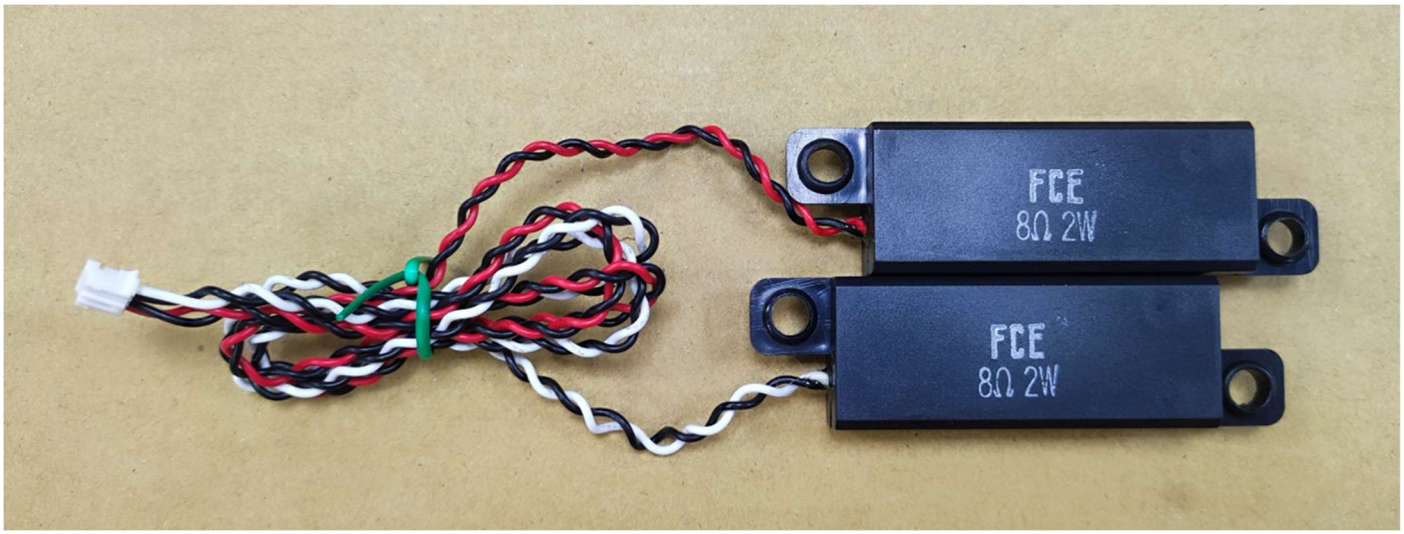
FCE
8Ω 2W
FCE
8Ω 2W

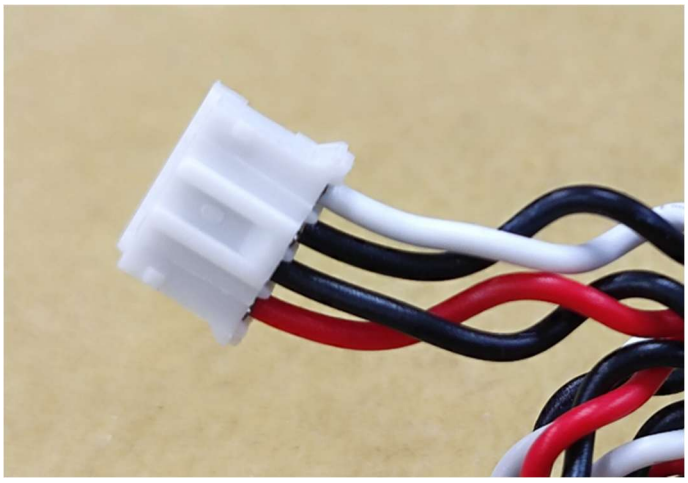

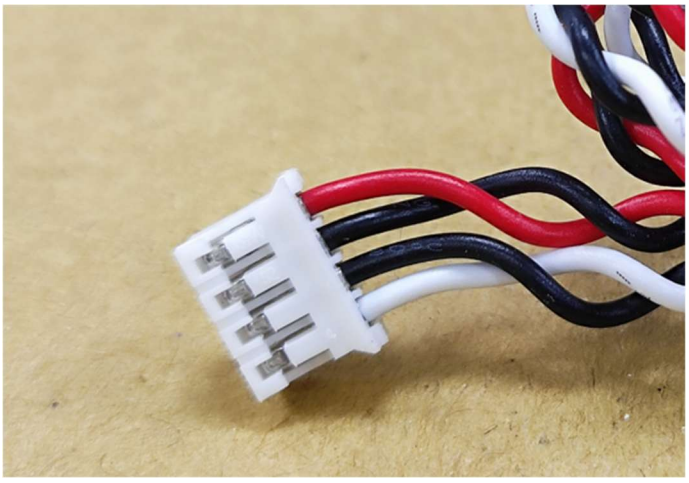

FCE 泉州豐勤電子有限公司

規 格 認 定 書

SPECIFICATION FOR APPROVAL

客户名称 CUSTOMER	钰纬科技开发股份有限公司
产品名称 PRODUCT	**SoundBox**
客户型号 CUSTOMER PART No.	**3ZSK800B843**
本厂型号 MODEL No.	**2040IVBOX-77(GP)**
环保要求 ENVIRONMENT REQUEST	**RoHS**
日期 DATE	**2025-08-27**

尊敬的客户： **非常感谢您在百忙之中确认敝公司送来的样品。如果样品符合贵公司的产品要求，请在此承认书上签字认可。如果我们的样品与贵公司所需产品存在差异，请指正。** **BEST REGARDS!**	版 本 C
客户接受 This specification is received： 接受日 DATE：	

拟制 Drafted by	审核 Checked by	批准 Approved by
陈海建	余强	谢甘霖

豐群（臺灣）電子有限公司 新北市板橋區民生路二段232號1F之8

豐勤（泉州）電子有限公司 福建省泉州市洛江區村院街3號

TEL: +886-2-8252-2781 +86-595-22632579
FAX: +886-2-8252-2782 +86-595-22639258
http://www.qzfce.com

SPECIFICATIONS	CUSTOMER PART No.	3ZSK800B843
	MODEL No.	2040IVBOX-77(GP)

目录 TABLE OF CONTENTS

序号 No.	项目 ITEM	页码 PAGE
	目录 Table of contents	1
	修订记录 Revision	2
1	测试条件 Test Condition	3
2	一般规范 General Specifications	3
3	扬声器模式特性 Speaker Mode Characteristics	4
4	扬声器模式测量示意图 Speaker Mode Measurement Diagram	4
5	扬声器模式频率响应 Speaker Mode Frequency Response	5
6	环境试验特性 Environmental Characteristics	6
7	产品外观 Product Outside View	7
8	线材图 Wire Diagram	8
9	产品包装 Product Packing View	9

SPECIFICATIONS	CUSTOMER PART No.	3ZSK800B843
	MODEL No.	2040IVBOX-77(GP)

修订记录 REVISIONS RECORD

REVISION	DATE	ITEM/CONTENT	DESIGNED	APPD.BY
A	2013.10.18		邓小慧	谢甘霖
B	2025.08.15	振膜增加花纹	陈海建	谢甘霖
C	2025.08.27	客户料号由“3ZSK800B840”变更为“3ZSK800B843”	陈海建	谢甘霖

SPECIFICATIONS	CUSTOMER PART No.	3ZSK800B843
	MODEL No.	2040IVBOX-77(GP)

1. 测试条件 TEST CONDITION

Unless otherwise specified,the standard range of atmospheric conditions for making measurements and tests are as follows (无特定要求时如下述测试条件) : 5℃~ 35℃, 25% ~85%RH, 860 HPA ~1060 HPA.
If there is no doubt about the results,measurement shall be made with in the following limits （当判定有疑义的场合如下述测试条件）:20℃±2℃,60% ~ 70%RH,860 HPA ~1060 HPA.

2. 一般规范 GENERAL SPECIFICATIONS

No.	ANALYSIS ITEMS	SPECIFICATIONS
2.1	外形尺寸 Main dimensions（Unit: mm）	57.5X23.0X14.5H
2.2	功能模式 Transducing function	SoundBox
2.3	重量 Unit weight	33.8g
2.4	交流阻抗 Impedance	8Ω ±15%　at 1.0kHz 1.0Vrms Sine Wave .
2.5	直流电阻 Dc resistance	7.2Ω ±10%
2.6	工作温度 Operating temperature	- 10℃ ～ +50℃
2.7	贮存温度 Storage temperature	- 10℃ ～ +55℃

SPECIFICATIONS	CUSTOMER PART No.	3ZSK800B843
	MODEL No.	2040IVBOX-77(GP)

3. 扬声器模式特性 SPEAKER MODE CHARACTERISTICS (FOR NEAR SOUND FIELD AT 20℃)

No.	ANALYSIS ITEMS	SPECIFICATIONS	CONDITIONS
3.1	谐振频率 Resonance frequency	1100（±220）Hz	1.0V Sine wave
3.2	频率范围 Frequency range	670~20KHz	
3.3	灵敏度 S.P.L. (0dB=20 ubar)	83dB ±3dB	At 1W/1M(1000,1200,1500,2000Hz)
3.4	额定功率(入箱功率）Rated power	2.0 W	
3.5	最大功率(入箱功率）MAX. Power	3.0 W	
3.6	失真 Distortion	5% max.	At 1W / 1kHz
3.7	纯音检听 Operation test	sine wave. 正弦波 4.47 V 50~ 5kHz .	

4. 扬声器模式测量示意图 SPEAKER MODE MEASUREMENT DIAGRAM

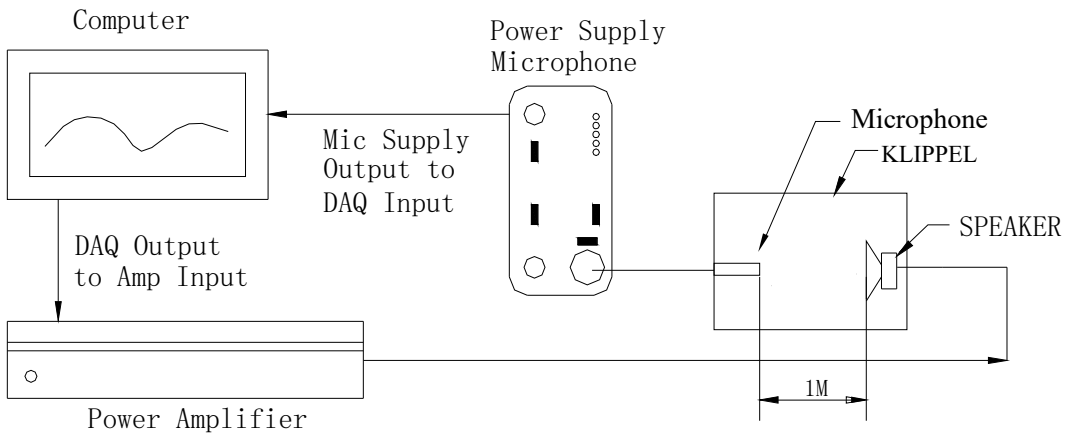

(Fig. 1)

SPECIFICATIONS	CUSTOMER PART No.	3ZSK800B843
	MODEL No.	2040IVBOX-77(GP)

5. 扬声器模式频率响应 SPEAKER MODE FREQUENCYRESPONSE

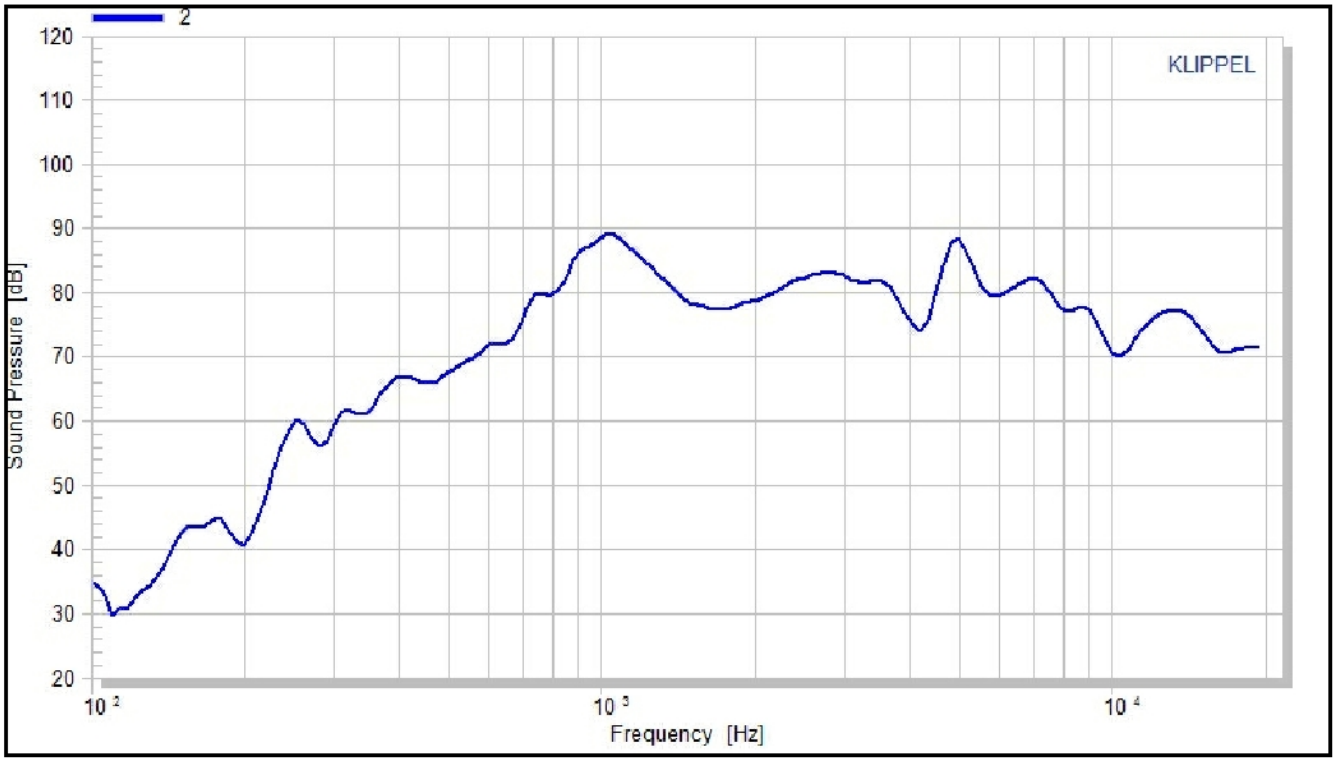

SPECIFICATIONS	CUSTOMER PART No.	3ZSK800B843
	MODEL No.	2040IVBOX-77(GP)

6. 环境试验特性 ENVIRONMENTAL CHARACTERISTICS

No.	ANALYSIS ITEMS	CONDITIONS
6.1	工作温度 Operating temperature range	-10℃ ～+50℃
6.2	贮存温度 Storage temperature range	-10℃ ～+55℃
6.3	外观检测 Appearance	Should not exist any obstacle to be harmful to normal operation : damages \ cracks \ rusts and distortions etc.
6.4	试验后检测 Results of after test	Sensitivity difference shall be within (3dB) and should satisfy the test described under item 3.7 after each following test.
6.5	拉力试验 Terminal strength	Capable of withstanding **(2N)** load for **(10 sec.)** without resulting in any damage or rejection .
6.6	高温试验 High temperature durability	After having been in a test chamber for **16 hours** at the condition of **+55℃** ±3℃ and then let **6 hours** in a room .
6.7	低温试验 Low temperature durability	After having been in a test chamber for **16 hours** at the condition of **-10℃** ±3℃ and then let **6 hours** in a room .
6.8	湿度试验 Humidity durability	After having been in a test chamber for **48 hours** at the condition of **+40℃**±2℃ **90%~95%** RH and then let **6 hours** in a room .
6.9	温度循环试验 Temperature cycle durability	Low temperature **-10 ℃** ±2℃ (1 hour) / high temperature **+55**±2℃ (1 hour) : 1 cycle , total 5 cycles and then let 6 hours in a room .
6.10	振动试验（捆包状态） Vibration durability（PACK）	Frequency Range:10Hz ~ 55Hz~10Hz Amplitude : 0.35mm Duration : 2h per axis=10 cycles ; 3 axis
6.11	滑落冲击试验 Drop impact test	Speaker magnetic circuit part of the fall line a distance of 600mm ± 25mm. Angle A is 60 ° ± 5 °. 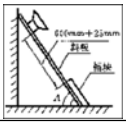
6.12	绝缘抵抗 Insulation resistance	Voice coil and magnetic circuit terminal and cone frame between the metal parts of the insulation resistance of not less than 1 1MΩ 音圈引出端与盆架和磁路的金属部分之间的绝缘电阻不小 **1MΩ**
6.13	负载试验 Load test	White Noise with Weighted Filter 4.47 Volts. (RMS) 48 Hrs.

SPECIFICATIONS	CUSTOMER PART No.	3ZSK800B843
	MODEL No.	2040IVBOX-77(GP)

7.产品外观 PRODUCT OUTSIDE VIEW

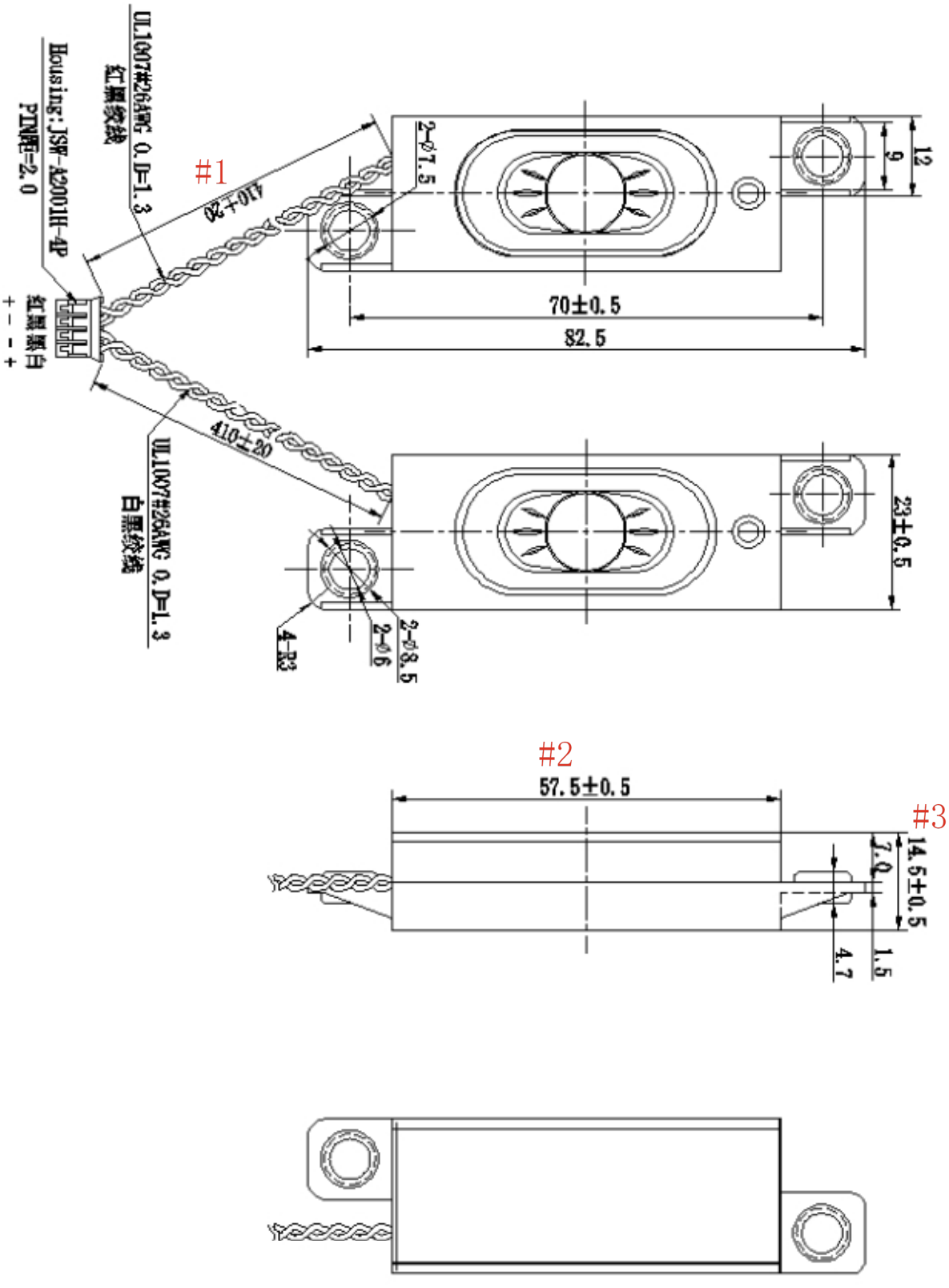

SPECIFICATIONS	CUSTOMER PART No.	3ZSK800B843
	MODEL No.	2040IVBOX-77(GP)

8.线材图 WIRE DIAGRAM

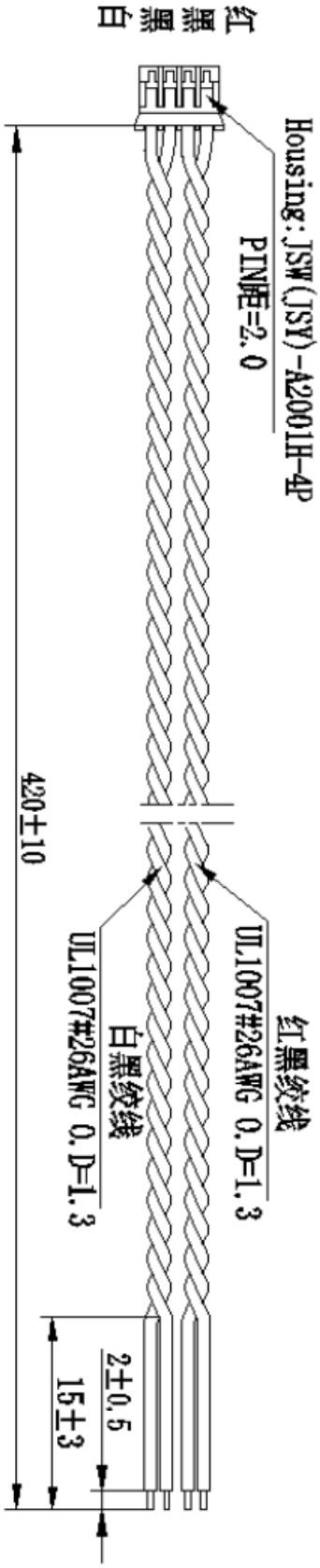

SPECIFICATIONS	CUSTOMER PART No.	3ZSK800B843
	MODEL No.	2040IVBOX-77(GP)

9.产品包装 PRODUCT PACKING VIEW

版次	A

整箱要件	音箱	盖板	内包装盒	外包装箱
规　格	2040IVBOX-77(GP)	450×435×7	450×435×32	465×450×190
料　号		BZ-GB-0004	BZ-XSH-0001	BZ-WZX-0031
材　料		纸	PET	纸
数量/箱	200×2个	6个	5个	1个
重量/件	33.8g			
备　注			40×2个音箱/盒	5盒/箱

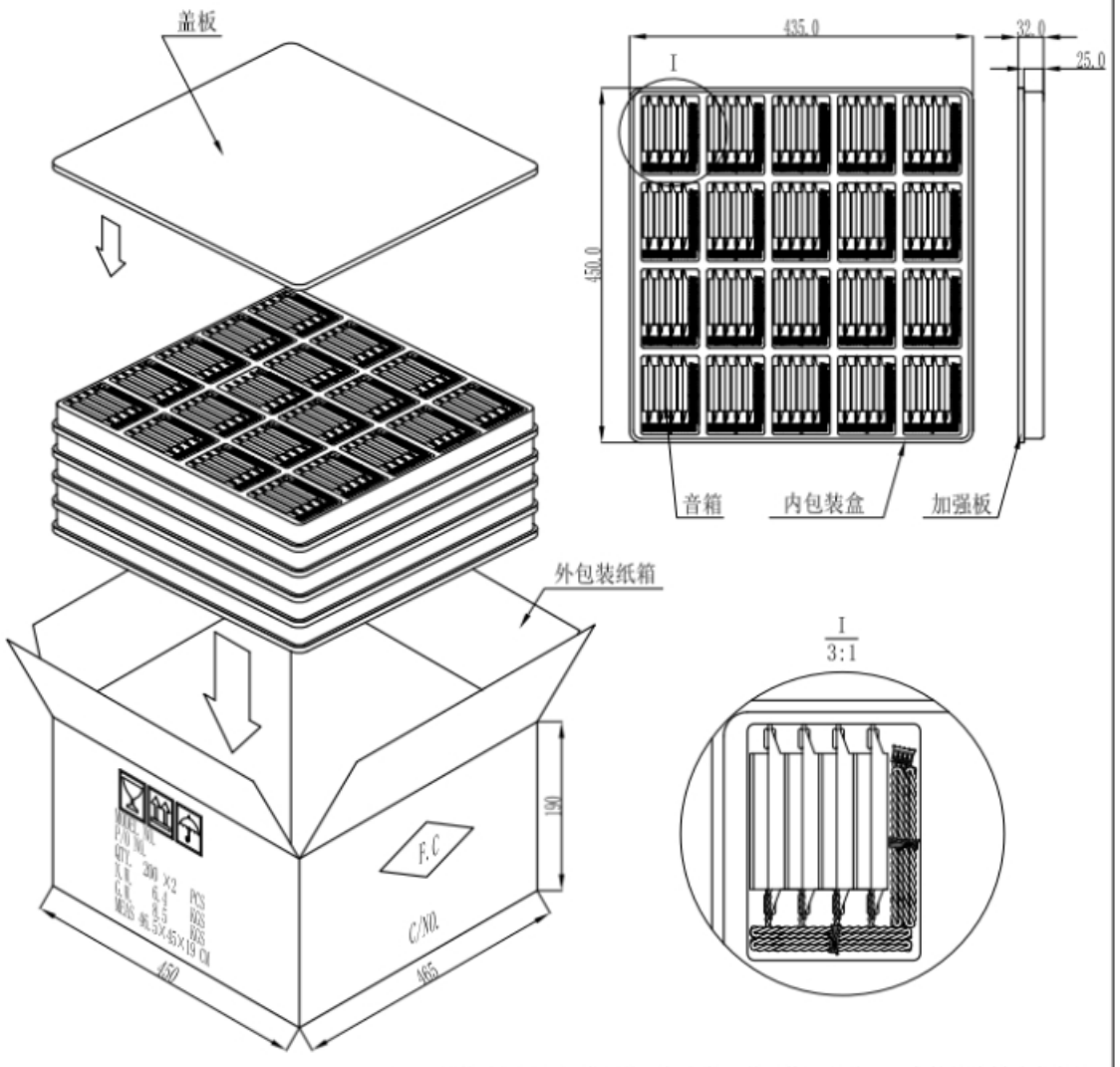

注：包装时如图示振膜面统一朝左装入单元格，左边一对音箱的线材放在底部，右边一对音箱的线材放在最右边即最后一个音箱的背面。

2040IVBOX-77(GP)包装明细			图　号	FC-BZMX-0350		
设　计			比　例	1:7.5	数　量	200×2pcs/箱
制　图			净　重	6.8kg/箱	毛　重	8.9kg/箱
审　核			泉州豐勤電子有限公司 QUANZHOU FENGQIN ELECTRONIC CO.,LTD.			
批　准						