Product Specification Sheet
产品规格书

Customer 客户名称	DIVA
Model Name 产品型号	CCSF240-000A
Qisda P/N Qisda 物料号	EM.6ED10.00G
Diva P/N Diva 物料号	2AAD698003T (T0211)
LCM Model LCM 型号	G240UAN01.2
Date 日期	2025-09-26
Version 版本	V1.4



Customer's Approval		REHEO	
Approved By	Date	Prepared By Liangwei.Chen	Date 2025.09.26
Approved By	Date	Checked By Noya.He Chuangchuang.Dong June.Xu	Date 2025.09.26
Approved By	Date	Approved By John.Wang	Date 2025.09.26

Revision History

Version	Revise Date	Page	Content	Author
V1.0	2025/01/22	29	Initial Release	Liangwei.Chen
V1.1	2025/02/28	29	N.W.&G.W. Data updates	Liangwei.Chen
V1.2	2025/07/18		The chromaticity coordinate error is modified to 0.03	Liangwei.Chen
		19	Optimize the packaging scheme and add the pallet packaging method.	
		30	The appearance inspection specifications are updated.	
V1.3	2025/09/18	29-30	Packaging update	Liangwei.Chen
V1.4	2025/09/26	25-26	BOX LABEL DEFINE update	Liangwei.Chen

Table of Contents

1.GENERAL SPECIFICATIONS 4

2.ABSOLUTE MAXIMUM RATINGS 4

3. ABSOLUTE MAXIMUM RATINGS 5

4. INTERFACE SPECIFICATIONS 8

5. OPTICAL CHARACTERISTIC 12

6.PIN ASSIGNMENT 15

7.BLOCK DIAGRAM 16

8.QUALITY ASSURANCE 17

9.LCM PRODUCT LABEL DEFINE 23

10.PRECAUTION FOR USING LCM 27

11.OUTLINE DRAWING 28

12.PACKAGE INFORMATION 30

1.GENERAL SPECIFICATIONS

Parameter	Specifications	Unit
Screen Size	24 (diagonal)	inch
Display Format	1920(H) x (R,G,B) x1080(V)	dot
Outline Dimension	572.5(H) x 377.9(V) x 19.75(D)	mm
Active Area	518.4(H) x 291.6(V)	mm
Pixel Pitch	0.270(H) x 0.270(V)	mm
Pixel Configuration	R.G.B. Vertical Stripe	
Display Mode	AHVA mode, Normally Black	
Surface treatment	AR&AFCoating	
Back-light	LED	
View Direction	All	
Weight	4000	g
Our components and processes are compliant to RoHS & REACH & Halogen Free standard		

2.ABSOLUTE MAXIMUM RATINGS

Parameter	Symbol	MIN.	MAX.	Unit	Remark
Logic/LCD Drive Voltage	V_{DD}	-0.3	16.5	V	Note1,2
Operating Temperature	Top	0	50	°C	
Storage Temperature	Tst	-20	60	°C	
Operation Humidity	Tst	5	90	%RH	
Storage Humidity	Hst	5	90	%RH	

Note 1: With in Ta (25 °C)

Note 2: Permanent damage to the device may occur if exceed maximum values

Note 3: For quality performance, please refer to IIS (Incoming Inspection Standard).

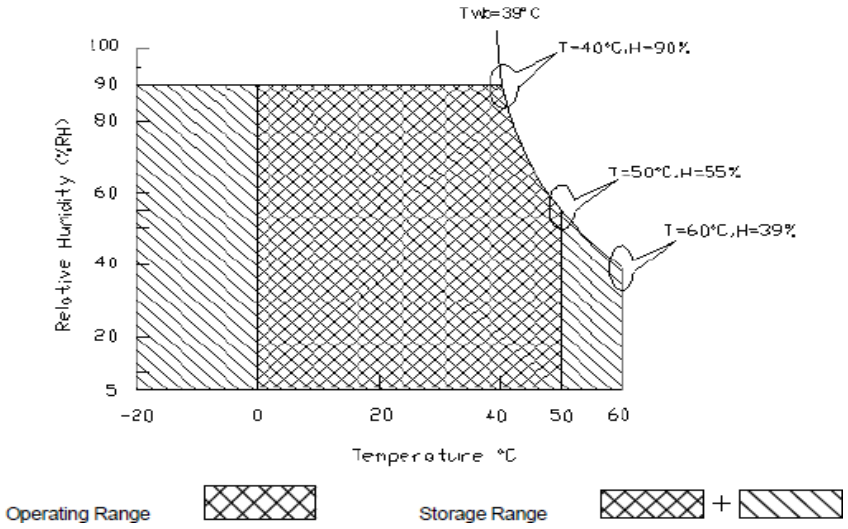

3. ABSOLUTE MAXIMUM RATINGS

3.1 TFT LCD Module

3.1.1 Power Specification

Input power specifications are shown as follows

Item	Symbol	Min.	Typ.	Max.	Unit	Remark
VDD	Logic/LCD Drive Voltage	10.8	12.0	13.2	V	+/-10%
IDD	VDD Current	-	(0.7)	(0.9)	A	Vin=12V, White Pattern, at 60Hz
Irush	LCD Inrush Current	-	-	3	A	Note1
PDD	VDD Power	-	8.4	10.8	W	Vin=12V, White Pattern, at 60Hz
VDDrp	Allowable Logic/LCD Drive Ripple Voltage	-	-	300	[mV]p-p	With panel loading

Note1：Measurement conditions:

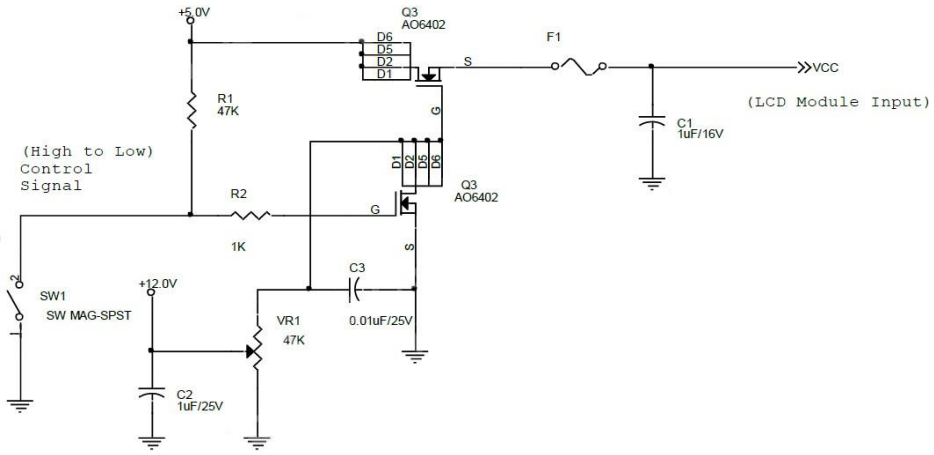

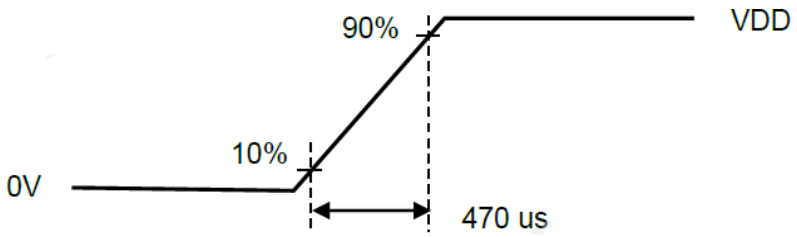

VDD rising time

3.1.2.LVDS DC Signal Electrical Characteristics

Input signals shall be low or Hi-Z state when VDD is off

Item	Symbol	Min.	Typ.	Max.	Unit	Remark
Differential Input High Threshold	VTH	-	-	+100	mV	VICM = 1.2V
Differential Input Low Threshold	VTL	-100	-	-	mV	
Input Differential Voltage	| VID |	100	-	600	mV	
Differential Input Common Mode Voltage	VICM	+1.0	+1.2	+1.5	V	VTH/VTL=+-200mV

Note 1: LVDS Signal Waveform

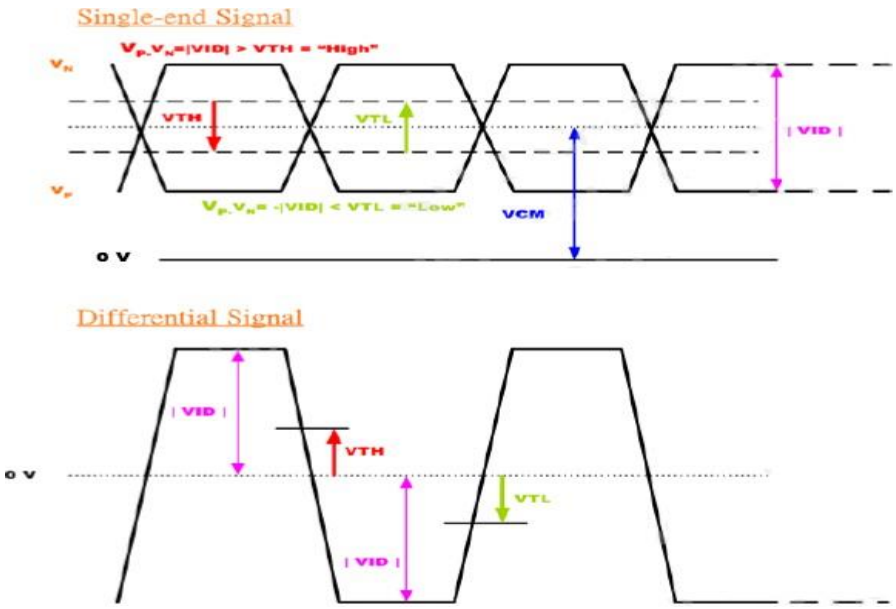

3.2 Backlight Unit

3.2.1LED Backlight Unit : Driver Connector

Pin No.	Symbol	Function	Note
1	VDD	LED Power Supply(Typ +24V)	Note1
2	VDD	LED Power Supply(Typ +24V)	Note1
3	VDD	LED Power Supply(Typ +24V)	Note1
4	VDD	LED Power Supply(Typ +24V)	Note1
5	VDD	LED Power Supply(Typ +24V)	Note1
6	GND	Ground	Note2
7	GND	Ground	Note2
8	GND	Ground	Note2
9	GND	Ground	Note2
10	GND	Ground	Note2
11	NC	Do not connect	
12	On/Off	High: LED ON(3.3V); Low: LED OFF	
13	IC	Internally Connected, Keep Open	
14	PWM	PWM; duty 10%~100%	

Note1:AII VDD LED power pins shall be connected to+24.0V(typ.)
Note2:AII GND pins shall be grounded Metal bezel is internally connected to GND

3.2.2 Parameter guideline for LED

Following characteristics are measured under a stable condition using an inverter at 25℃ (Room Temperature):

LED characteristics

Item	Symbol	Min.	Typ.	Max.	Unit	Remark
LED Power Consumption	PLED	-	16.38	18.5	W	IF =65 mA, Ta= 25℃
LED Lifetime	LTLED	50,000	-	-	Hrs	IF =65 mA, Ta= 25℃

Note 1: Calculator value for reference PLED = VF (Normal Distribution) * IF (Normal Distribution) /Efficiency

Note 2: The LED life-time define as the estimated time to 50% degradation of initial luminous

Backlight input signal characteristics

Item	Symbol	Min.	Typ.	Max.	Unit	Remark
Input Voltage	VDD	19.0	24.0	31.0	V	
Input Current	I_{VDD}	-	0.8	-	A	100% PWM Duty
Power Consumption	P_{VDD}	-	19.2	21.84	W	100% PWM Duty
Inrush Current	Irush LED	-	-	6	A	at rising time=470us
Dimming Frequency	F_{PWM}	0.1	0.2	20	kHZ	
Swing Voltage		3	3.3	5	V	
Dimming Duty 200~5K		5	-	100	%	
Dimming Duty 5K~20K		15	-	100	%	
LED Forward Current	I_F	-	65	-	mA	Ta = 25℃
LED Forward Voltage	V_F	-	-	-	V	
		-	36	40.8	V	I_F=65mA, Ta= 25℃
		-	-	-		

Note1: Measured on panel VLED

4. INTERFACE SPECIFICATIONS

4.1 Pixel Format Image

Following figure shows the relationship between input signal and LCD pixel format

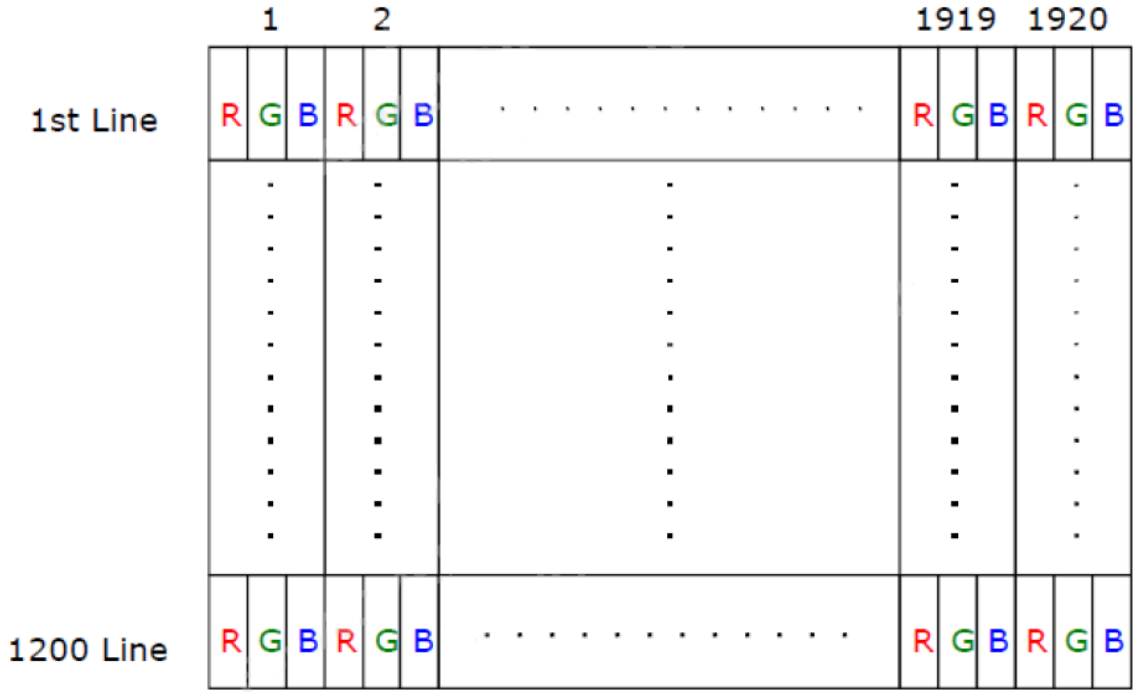

4.2 The Input Data Format

Data Mapping of JEIDA Format

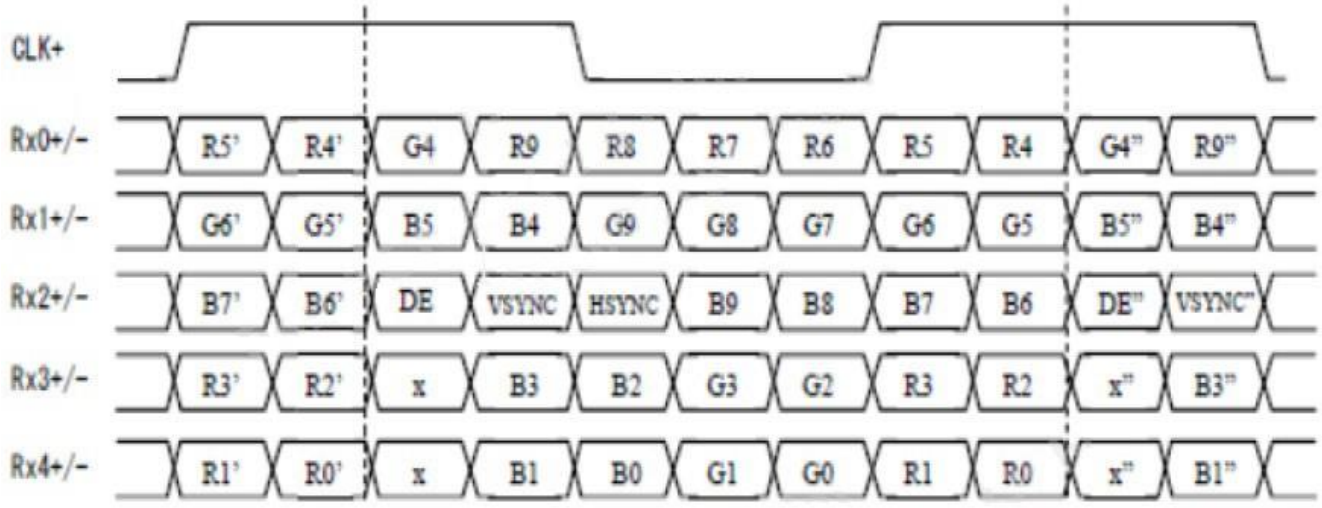

4.3 interface Timing

4.3.1 Timing Characteristics

Signal		Symbol	Min.	Typ.	Max.	Unit
Clock Frequency		$1/T_{Clock}$	59.5	77	85	MHz
Vertical Section	Period	T_V	1214	1235	1734	T_{Line}
	Active	T_{VD}	1200	1200	1200	T_{Line}
	Blanking	T_{VB}	14	35	534	T_{Line}
Horizontal Section	Period	T_H	1000	1040	1428	T_{Clock}
	Active	T_{HD}	960	960	960	T_{Clock}
	Blanking	T_{HB}	40	80	468	T_{Clock}
Frame Rate		F	49	60	66	Hz

Note: DE mode only.

4.3.2 input Timing Diagram

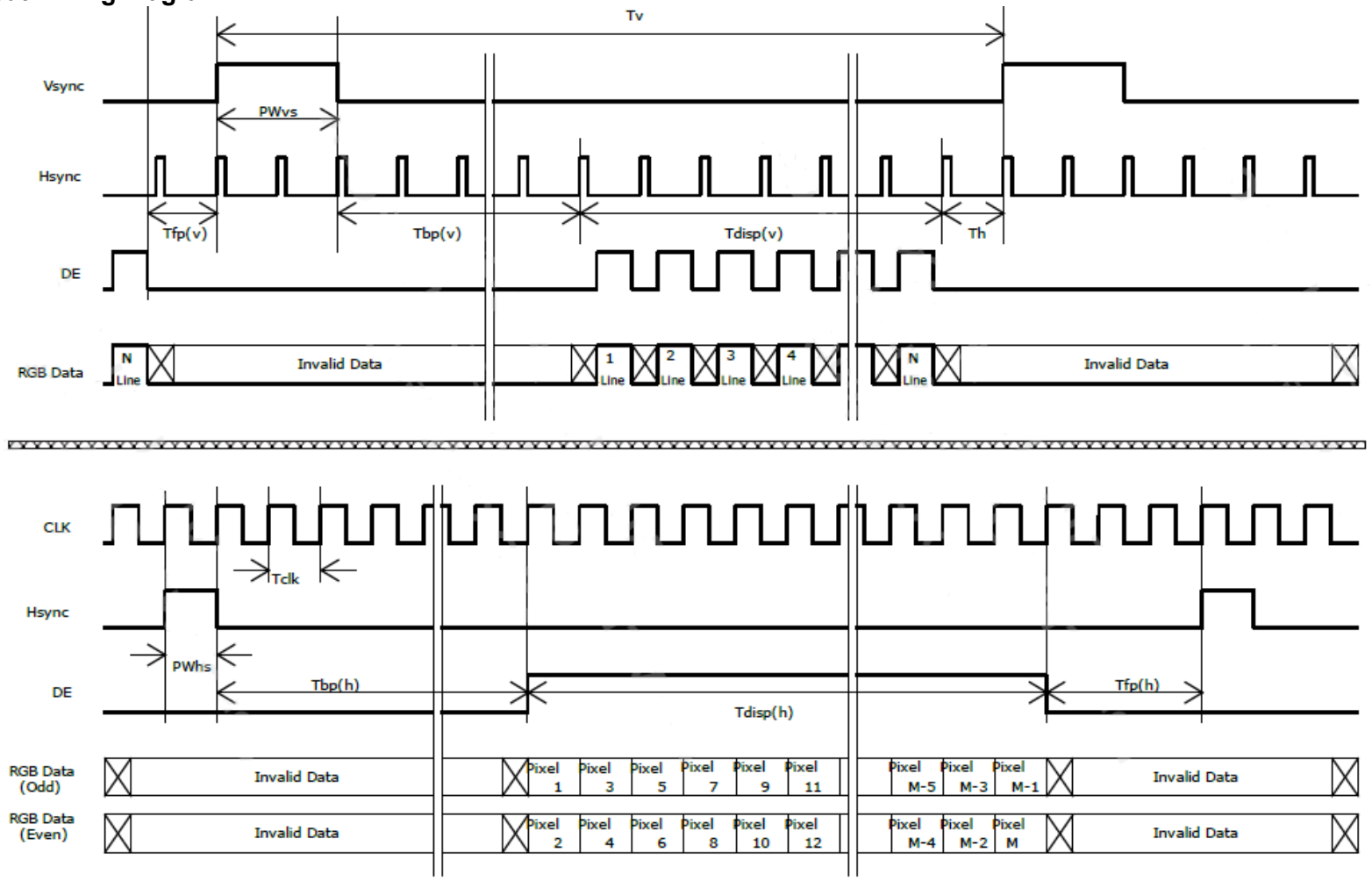

4.4 Power ON/OFF Sequence

VDD power and lamp on/off sequence is as below. Interface signals are also shown in the chart.
Signals from any system shall be Hi-Z state or low level when VDD is off.

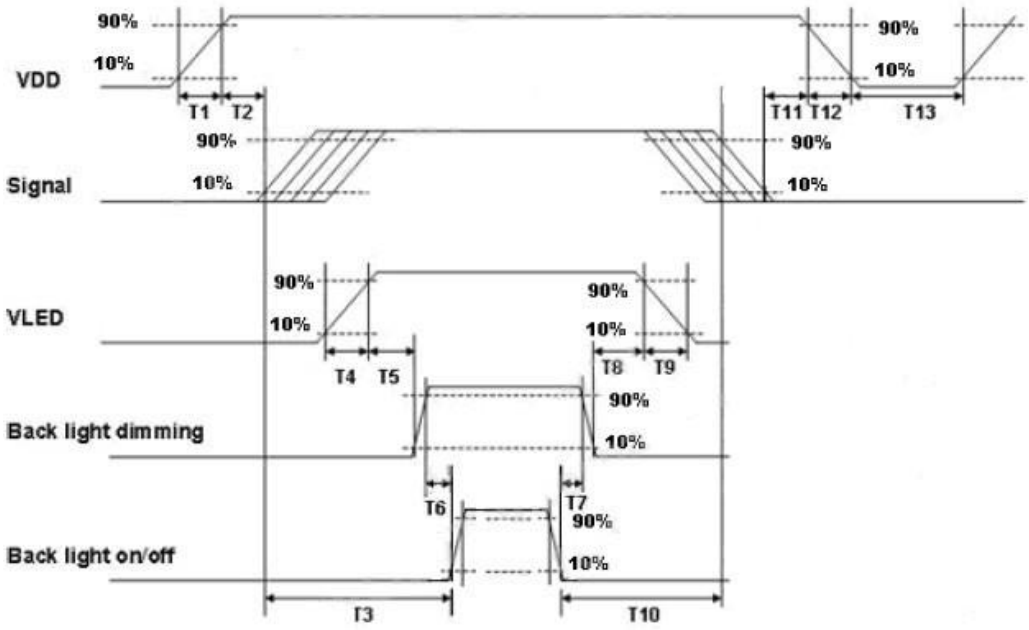

Power ON/OFF sequence timing

Parameter	Value				Remark
	Min.	Typ.	Max.	Units	
T1	0.5	-	10	ms	
T2	30	40	50	ms	
T3	200	-	-	ms	
T4	0.5	-	10	ms	
T5	10	-	-	ms	
T6	10	-	-	ms	
T7	0	-	-	ms	
T8	10	-	-	ms	
T9	-	-	10	ms	
T10	110	-	-	ms	
T11	0	16	50	ms	
T12	0	-	10	ms	
T13	1000	-	-	ms	

The above on/off sequence should be applied to avoid abnormal function in the display. Please make sure to turn off the power when you plug the cable into the input connector or pull the cable out of the connector.

5. OPTICAL CHARACTERISTIC

Parameter		Symbol	Condition	MIN.	TYP.	MAX.	Unit	Remarks
Viewing Angle	Horizontal	θ_x^+	Center CR≥10	--	85	89	deg	Note 1,4
		θ_x^-		--	85	89		
	Vertical	θ_Y^+		--	85	89		
		θ_Y^-		--	85	89		
Contrast Ratio		CR	at optimized viewing angle	1260	1800	--		Note 1,3
Response time	Rise+ Fall	Tr+ Tf	Center $\theta x= \theta_y=0°$	-	22	--	ms	Note 1,6
Uniformity		B-uni	$\theta x= \theta_y=0°$	75	-	--	%	Note1,5
Brightness		L	$\theta x= \theta_y=0°$	320	400	--	cd/㎡	Note 1,2
Chromaticity		x_W	Center $\theta x=\theta y =0°$	Typ. -0.03	0.313	Typ. +0.03		Note 1,7
		y_W			0.329			
		x_R			0.689			
		y_R			0.309			
		x_G			0.212			
		y_G			0.730			
		x_B			0.146			
		y_B			0.061			

The following optical specifications shall be measured in a darkroom or equivalent state (ambient luminance ≤1 lux, and at room temperature). The operation temperature is 25°C±2°C.. The measurement method is shown in Note1.

Note1:The method of optical measurement:

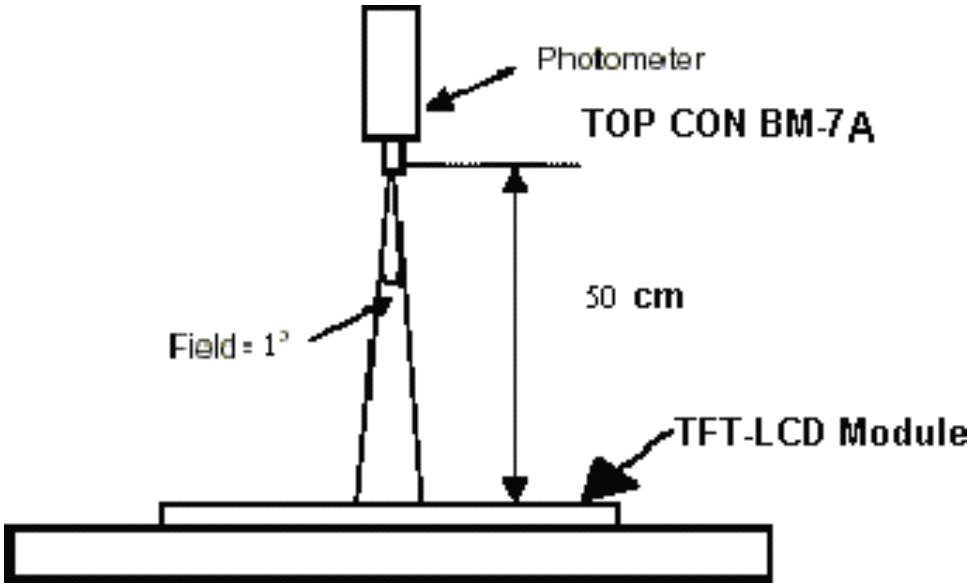

Note 2: Measured at the center area of the panel and at the viewing angle of the $\theta x=\theta y =0°$

Note 3: Definition of Contrast Ratio (CR):

$$CR = \frac{\text{Luminance with all pixels in white state}}{\text{Luminance with all pixels in Black state}}$$

Note 4: Definition of Viewing Angle

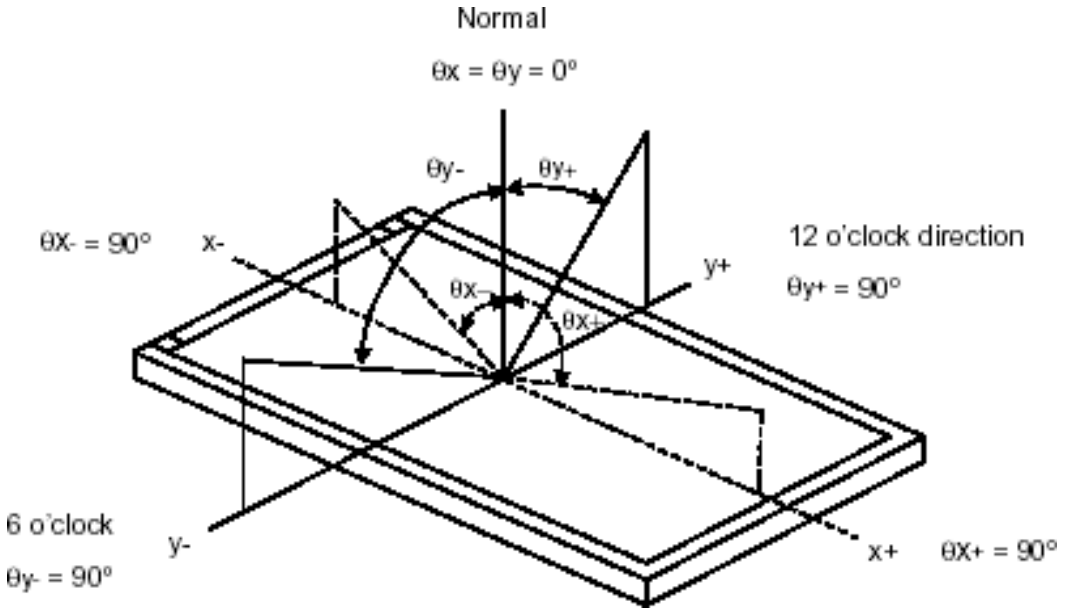

Note 5: Definition of Brightness Uniformity (B-uni):

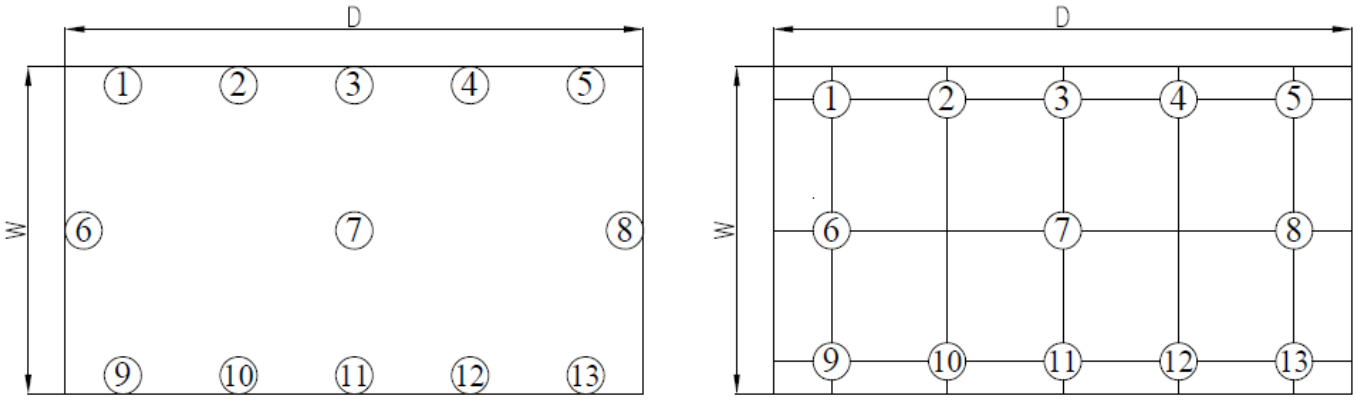

$$\text{B-uni} = \frac{\text{Minimum luminance of 13 points}}{\text{Maximum luminance of 13 points}}$$ (Note 5).

Note 6: Definition of Response Time:
The Response Time is set initially by defining the “Rising Time (Tr)” and the “Falling Time (Tf)” respectively. Tr and Tf are defined as following figure.

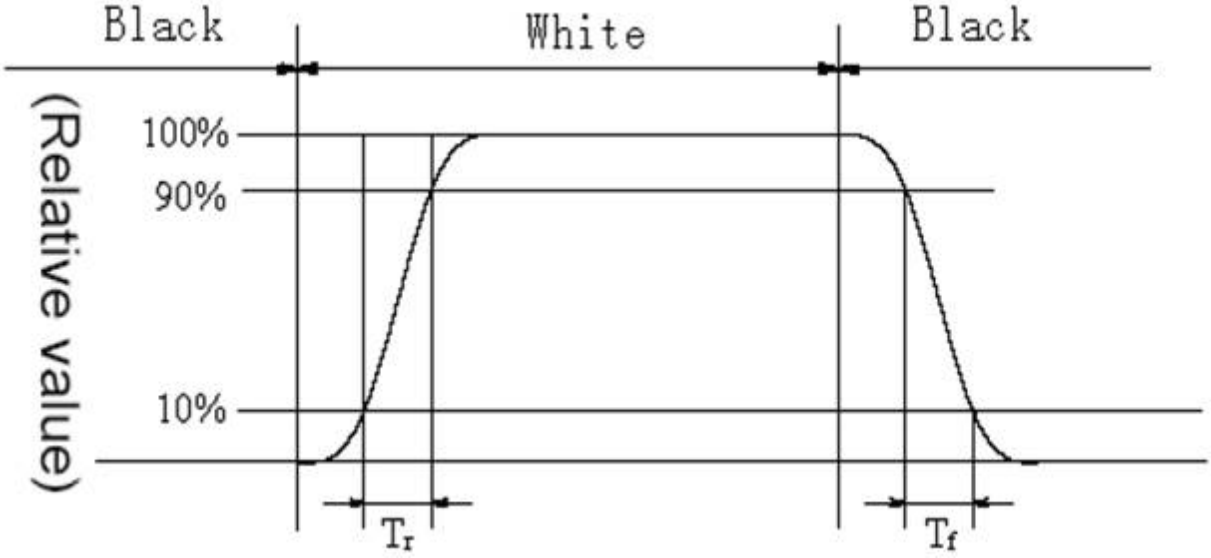

Note 7: Definition of Chromaticity:
The color coordinates (xW,yW),(xR,yR),(xG,yG),and (xB,yB) are obtained with all pixels in the viewing field at white, red, green, and blue states, respectively.

6.PIN ASSIGNMENT

Pin No.	Symbol	Function	Note
1	GND	Ground	Note2
2	IC	Internally connected & keep open	
3	IC	Internally connected & keep open	
4	IC	Internally connected & keep open	
5	IC	Internally connected & keep open	
6	IC	Internally connected & keep open	
7	GND	Ground	
8	IC	Internally connected & keep open	
9	NC	No contact	
10	NC	No contact	
11	GND	Ground	Note3
12	RO0N	ODD Pixel Data	Note3
13	RO0P	ODD Pixel Data	Note3
14	RO1N	ODD Pixel Data	Note3
15	RO1P	ODD Pixel Data	Note3
16	RO2N	ODD Pixel Data	Note3
17	RO2P	ODD Pixel Data	Note3
18	GND	Ground	Note2
19	ROCLKN	ODD Pixel Clock	Note3
20	ROCLKP	ODD Pixel Clock	Note3
21	GND	Ground	Note2
22	RO3N	ODD Pixel Data	Note3
23	RO3P	ODD Pixel Data	Note3
24	RO4N	ODD Pixel Data	Note3
25	RO4P	ODD Pixel Data	Note3
26	GND	Ground	Note2
27	GND	Ground	Note2
28	REON	Even Pixel Data	Note3
29	REOP	Even Pixel Data	Note3
30	RE1N	Even Pixel Data	Note3
31	RE1P	Even Pixel Data	Note3
32	RE2N	Even Pixel Data	Note3
33	RE2P	Even Pixel Data	Note3
34	GND	Ground	Note2
35	RECLKN	ODD Pixel Clock	Note3
36	RECLKP	ODD Pixel Clock	Note3
37	GND	Ground	Note2
38	RE3N	Even Pixel Data	Note3
39	RE3P	Even Pixel Data	Note3
40	RE4N	Even Pixel Data	Note3
41	RE4P	Even Pixel Data	Note3

42	GND	Ground	Note2
43	GND	Ground	Note2
44	GND	Ground	Note2
45	GND	Ground	Note2
46	GND	Ground	Note2
47	NC	No contact	
48	VDD	LCD Power Supply(typ+12.0V)	Note1
49	VDD	LCD Power Supply(typ+12.0V)	Note1
50	VDD	LCD Power Supply(typ+12.0V)	Note1
51	VDD	LCD Power Supply(typ+12.0V)	Note1

Note1: AII VDD LCD power pins shall be connected to +12.0V(typ.)
Note2: AII GND pins shall be grounded Metal bezel is internally connected to GND
Note3: Rx n+ and Rx n-(n=0,1,2,3,4) shall be wired by twist-pairs or side by side FPC patterns respectively

7.BLOCK DIAGRAM

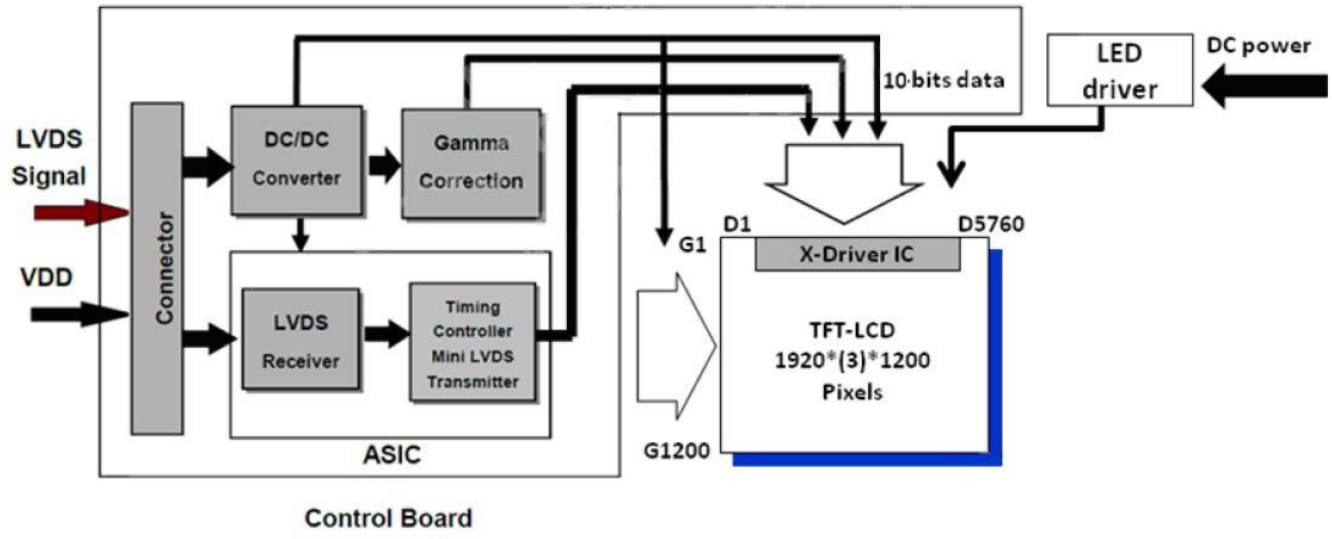

8.QUALITY ASSURANCE

8.1 Test Condition

8.1.1 Temperature and Humidity(Ambient Temperature)

Temperature : 25 ±5°C

Humidity : 65 ± 5%

8.1.2 Operation

Unless specified otherwise, test will be conducted under function state.

8.1.3 Container

Unless specified otherwise, vibration test will be conducted to the product itself without putting it in a container.

8.1.4 Test Frequency

In case of related to deterioration such as shock test. It will be conducted only once.

8.1.5 Test Method

Reliability Test Item & Level			Remark
No.	**Test Item**	**Test Level**	
1	High Temperature Storage Test	Ta=60°C,240hrs	IEC60068-2-2
2	Low Temperature Storage Test	Ta=-20°C,240hrs	IEC60068-2-1
3	High Temperature Operation Test	Ta=50°C,240hrs	IEC60068-2-2
4	Low Temperature Operation Test	Ta=0°C,240hrs	IEC60068-2-1
5	High Temperature and High Humidity (No operation)	T=50°C,80%RH,240hrs	IEC60068-2-3
6	Thermal Cycling Test (No operation)	-20°C /30min, 60/ °C 30min, 100 cycles	IEC60068-2-14
7	Vibration test (Package)	Frequency:10~55HZ Amplitude:1.5mm Sweep time:11min Test period:6Cycles for each direction of X,Y,Z	IEC60068-2-6
8	Drop test (Package)	Height :60cm 1 conner,3edges,6surfaces	IEC60068-2-32
9	Electrostatic Discharge Test	State: operating Location: LCM/TP surface Condition:150pf 330Ω Contact +/- 8kV Air +/-15kV Criteria: Class B	IEC61000-4-2

8.2 Inspection condition

8.2.1 Inspection conditions

8.2.1.1 Inspection Distance : 35 cm

8.2.1.2 View Angle :

(1) Inspection under operating condition : 0°-30°

(2) Inspection under non-operating condition : 0°-30°

8.2.1.3 Appearance inspection time: ≦15 second

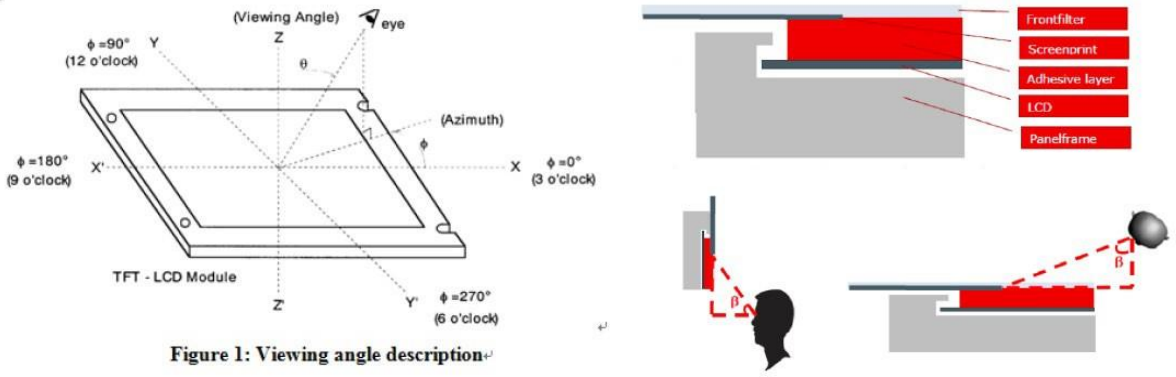

Figure 1: Viewing angle description

8.2.2 Environment conditions :

Ambient Temperature :		25±5℃
Ambient Humidity :		65±5%
Ambient Illumination	Cosmetic Inspection	820 ~1290lux
	Functional Inspection	300 ~ 500lux

8.2.3 Definition of applicable Zones

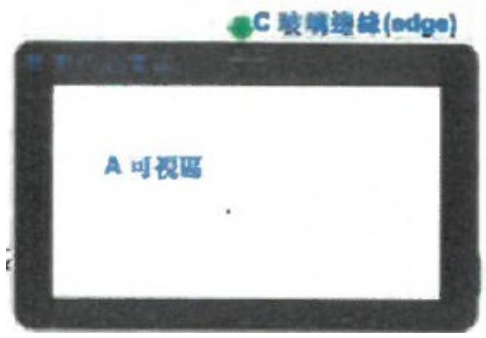

Area	Inspection Area
A	Active area
B	Coating area
C	Glass edge

8.2.4 Inspection Parameters

Appearance and Functional Inspection Criteria (D: diameter, L: length; W: width, Z: height, T: glass thickness, n： number)

<table>
<tr><th>Inspection item</th><th>Inspection standard</th><th>Description</th></tr>
<tr><td>No image</td><td>Prohibited</td><td></td></tr>
<tr><td>Image abnormal</td><td>Prohibited</td><td></td></tr>
<tr><td>Line defect</td><td>Prohibited</td><td> 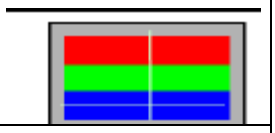 </td></tr>
<tr><td>Mura</td><td colspan="2">It is acceptable that the defect can not be seen with 2% ND filter.</td></tr>
<tr><td>Light leakage inspection</td><td colspan="2">It is required to be inspected in the dark room with dark pattern， edge brightness <0.8 Cd/m² ,other area brightness＜0.7 Cd/m² ;display port signal is used for measurement. Ambient Illumination :0~2Lux</td></tr>
<tr><td>Dot
(NOTE1)</td><td>
<table>
<tr><td rowspan="2">Item</td><td>Acceptable</td></tr>
<tr><td>Visible area</td></tr>
<tr><td>Bright dot</td><td>0</td></tr>
<tr><td>Small Bright dot （R/G/B）</td><td>5</td></tr>
<tr><td>Dark dot</td><td>4</td></tr>
<tr><td>Dark adjacent dots</td><td>2</td></tr>
</table>
</td><td> 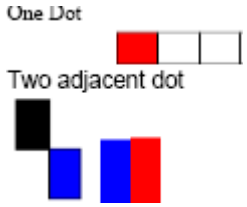
</td></tr>
<tr><td>Foreign material in dot shape
(NOTE5)</td><td>
<table>
<tr><td>Area</td><td>SPEC (unit: mm)</td><td>Acceptable</td></tr>
<tr><td rowspan="3">A</td><td>D≦0.2</td><td>Ignored</td></tr>
<tr><td>0.2<D≦0.5</td><td>3</td></tr>
<tr><td>D＞0.5</td><td>0</td></tr>
</table>
</td><td> 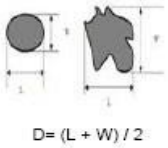
</td></tr>
<tr><td>Foreign material in line shape
(NOTE4)</td><td>
<table>
<tr><td>Area</td><td>SPEC(unit: mm)</td><td>Acceptable</td></tr>
<tr><td rowspan="3">A/B</td><td>W≤0.07 and L ≤2.0 or W≤0.10 and L ≤0.3</td><td>Ignored</td></tr>
<tr><td>0.07 <W≤ 0.1, 0.3<L ≤ 2.0</td><td>3</td></tr>
<tr><td>W > 0.1， L > 2mm</td><td>0</td></tr>
</table>
</td><td> 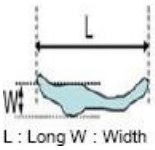
</td></tr>
<tr><td>Scratch
(NOTE4)</td><td>
<table>
<tr><td>Area</td><td>SPEC (unit: mm)</td><td>Acceptable</td></tr>
<tr><td rowspan="2">Circular</td><td>D≦0.50</td><td>4</td></tr>
<tr><td>D＞0.5</td><td>0</td></tr>
<tr><td rowspan="2">Linear</td><td>W≤0.05 and L≤2mm</td><td>Ignored</td></tr>
<tr><td>W＞0.05， L＞2mm</td><td>0</td></tr>
</table>
</td><td> 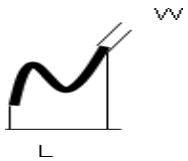
</td></tr>
</table>

<table>
<tr><td>Bubbles
(NOTE5)</td><td><table>
<tr><th>Area</th><th>SPEC (unit: mm)</th><th>Acceptable</th></tr>
<tr><td rowspan="2">A</td><td>D≦0.5</td><td>4</td></tr>
<tr><td>D＞0.5</td><td>0</td></tr>
</table></td><td> 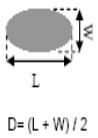
</td></tr>
<tr><td>Crack</td><td>Prohibited</td><td> 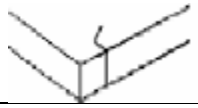 </td></tr>
<tr><td>Edge processing</td><td><table>
<tr><th>Area</th><th>SPEC (unit: mm)</th><th>Acceptable</th></tr>
<tr><td rowspan="3">B/C
正面
直视</td><td>D≦0.1</td><td>Ignored</td></tr>
<tr><td>0.1＜D≤0.3, distance >10cm</td><td>2</td></tr>
<tr><td>D＞0.3</td><td>0</td></tr>
</table></td><td> 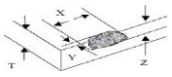
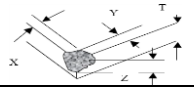 </td></tr>
<tr><td>Tape exposed</td><td><table>
<tr><th>Area</th><th>SPEC (unit: mm)</th><th>Acceptable</th></tr>
<tr><td>A</td><td>Prohibited</td><td>0</td></tr>
</table></td><td></td></tr>
<tr><td>Water marks</td><td><table>
<tr><th>Area</th><th>SPEC (unit: mm)</th><th>Acceptable</th></tr>
<tr><td>A</td><td>Prohibited</td><td>0</td></tr>
</table></td><td></td></tr>
<tr><td>Ink</td><td><table>
<tr><th>SPEC (unit: mm)</th><th>Acceptable</th></tr>
<tr><td>word unclear, inverted, mistake, break line</td><td>0</td></tr>
</table></td><td></td></tr>
<tr><td>Coating particle</td><td><table>
<tr><th>Area</th><th>SPEC (unit: mm)</th><th>Acceptable</th></tr>
<tr><td rowspan="3">B</td><td>D≦0.15</td><td>Ignored</td></tr>
<tr><td>0.15＜D≤0.4, distance >50cm</td><td>3</td></tr>
<tr><td>D＞0.4</td><td>0</td></tr>
</table></td><td></td></tr>
<tr><td>Saw Edge of Coating</td><td><table>
<tr><th>Area</th><th>SPEC (unit: mm)</th><th>Acceptable</th></tr>
<tr><td>B</td><td>D≤0.25mm</td><td>Acceptable</td></tr>
</table></td><td></td></tr>
<tr><td>Coating pin hole-Pervious to light</td><td><table>
<tr><th>Area</th><th>SPEC (unit: mm)</th><th>Acceptable</th></tr>
<tr><td rowspan="4">B</td><td>D≦0.2</td><td>Ignored</td></tr>
<tr><td>patching allow ,thickness≦0.3mm, 0.2＜D≤0.5, distance >50cm</td><td>8</td></tr>
<tr><td>patching allow ,thickness≦0.3mm , 0.5＜D≤1.0, distance >50cm</td><td>5</td></tr>
<tr><td>D＞1.0</td><td>0</td></tr>
</table></td><td></td></tr>
<tr><td>Lack of ink
（inspect from front if ink dropped on edge）</td><td><table>
<tr><th>Area</th><th>SPEC (unit: mm)</th><th>Acceptable</th></tr>
<tr><td rowspan="2">B</td><td>W≤0.25mm， distance >10cm</td><td>Ignored</td></tr>
<tr><td>W＞0.25mm</td><td>0</td></tr>
</table></td><td></td></tr>
<tr><td>Ink overflowed</td><td><table>
<tr><th>Area</th><th>SPEC (unit: mm)</th><th>Acceptable</th></tr>
<tr><td>B</td><td>Ink overflowing on front is not allowed, ignore if overflowing on back.</td><td>Ignored</td></tr>
</table></td><td></td></tr>
<tr><td>Function</td><td>Prohibited</td><td></td></tr>
</table>

Note:1: (a)Bright Dark point defect is defined as point defect of R,G,B with area >1/2 dot respectively
(b) Incomplete Bright point: < 1/2dot bright area is defined as incomplete bright point.
(c)Definition of distribution of point defect is as follows:
-minumum separation between dark point defects should be larger than 15mm..

Note:2 The external inspection should be conducted at the distance 35± 5cm between the eyes of inspctor and the panel .

Note:3 Luminance measurement for contrast ratio is at the distance 50± 5cm between the detective head and the panel with ambient illuminance less than 1 lux. Contrast ratio is obtained at optimum view angle.

Note:4 W-Width in mm , L-length of Max.(L1,L2) in mm.

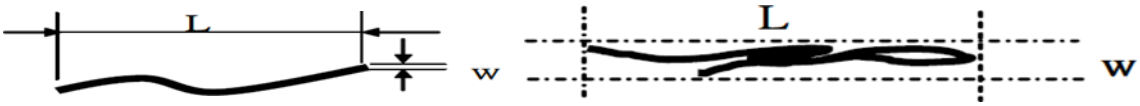

Note:5 Spot Foreign Material (W≧L/4)

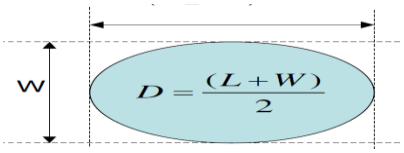

Note:6 The corlor that reflected on the surface should be according to sample

Note:7 The defect is not counted(means ignore) no matter the distance

Note:8 The ripple SPEC should be judged according to sample

Note:9 Foreign materail（dot scratch）judgement: it can be judged as OK if within the scope of dot shape.

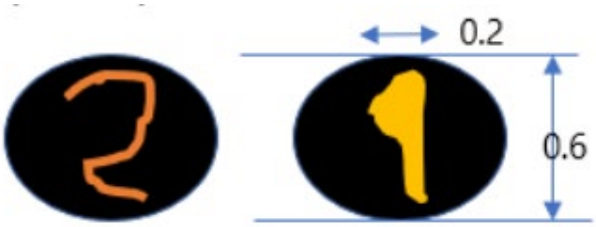

Note:10 There is an invisible disconnection in one line, or the disconnected line can be seen from another angle of refraction.

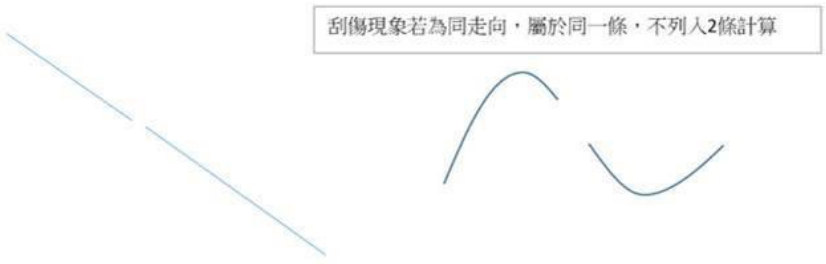

8.2.5 Sampling Condition

Unless otherwise agree in written, the sampling inspection shall be applied to the incoming inspection of customer.

Lot size: Quantity of shipment lot per model.
Sampling type: normal inspection, single sampling
Sampling table: MIL-STD-105E

Inspection level: Level II

	Definition	
Class of defects	AQL 0.65%	It is a defect that is likely to result in failure or to reduce materially the usability of the product for the intended function.
	AQL 1.5%	It is a defect that will not result in functioning problem with deviation classified.

9. LABEL DEFINE

9.1 LCM PRODUCT LABEL DEFINE

Product Label style:



Bar Code Define:

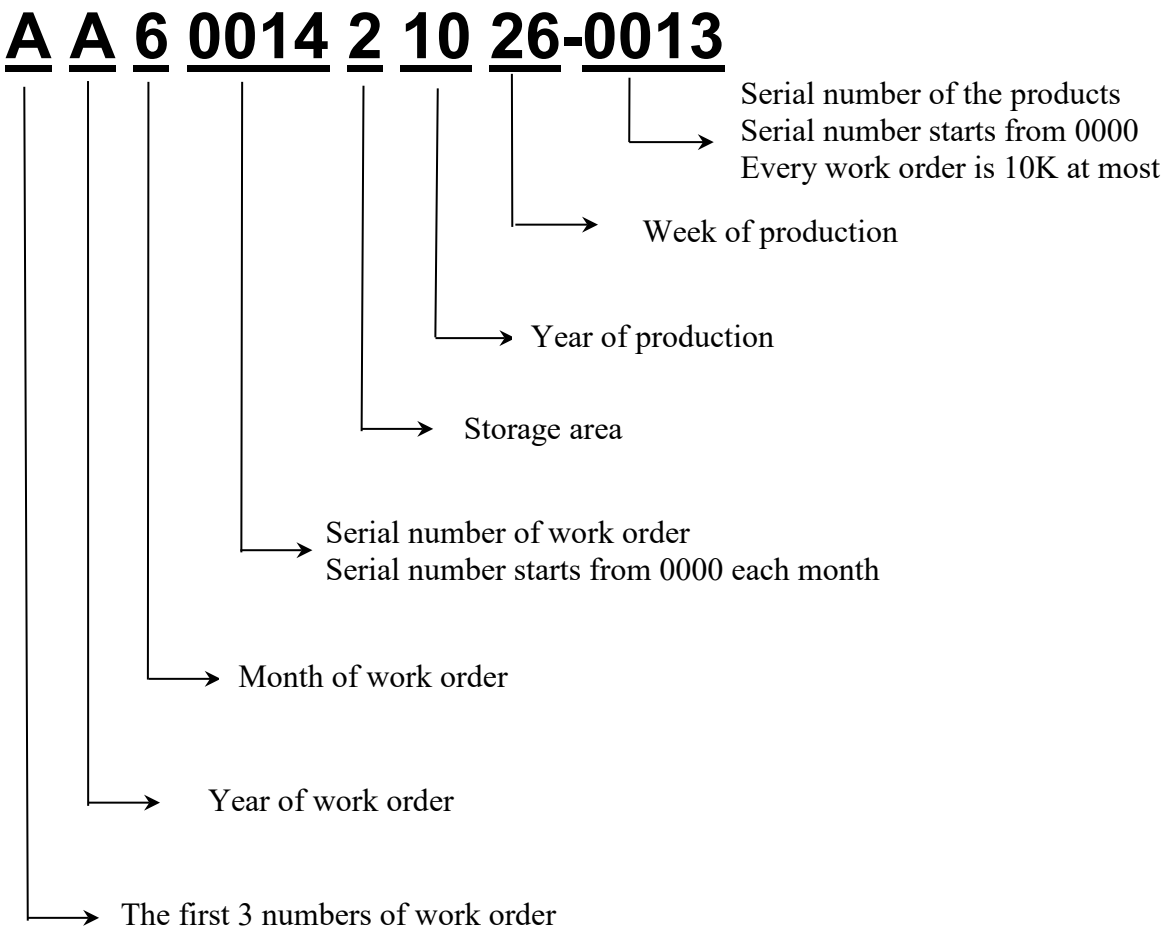

Product Name Define:

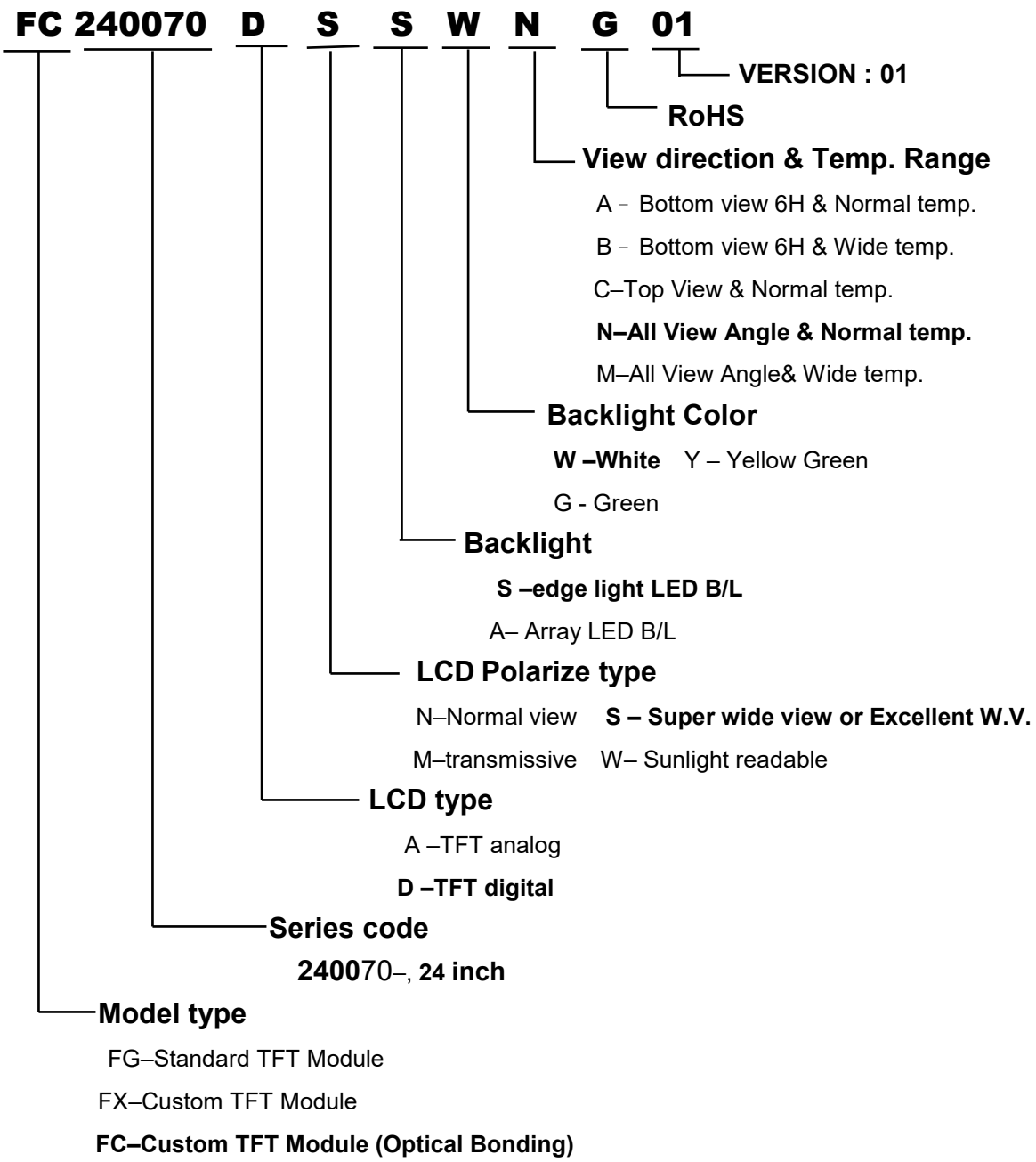

9.2. TLCM PRODUCT LABEL DEFINE

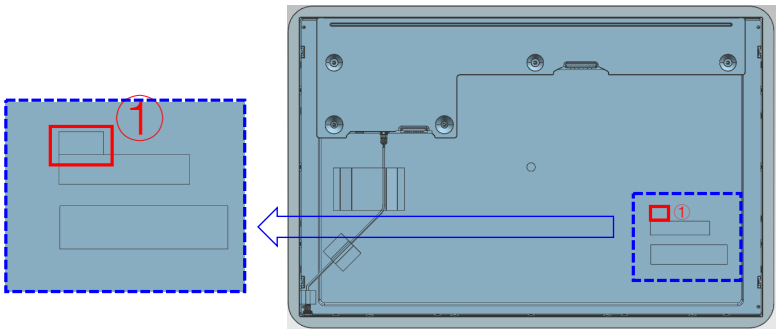

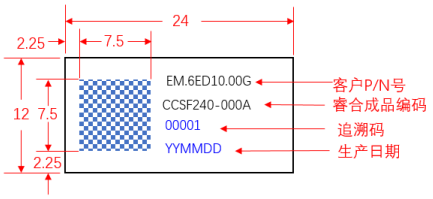

* 二维码编码规则：

EM.6ED10.00G_CCSF240-000A_00001_YYMMDD

客户P/N号　睿合成品编码　5位追溯码，次日更新　生产日期，YY为年份末2位

Attachment Position and definition of Module Label

9.3. BOX LABEL DEFINE

9.3.1 BOX LABEL 1

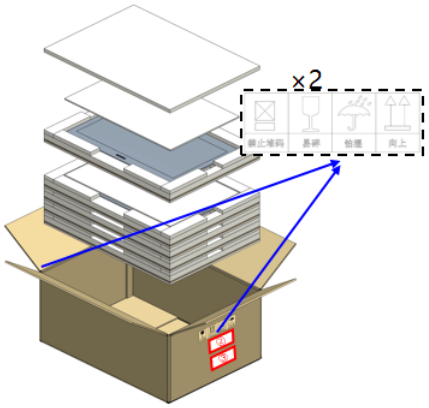

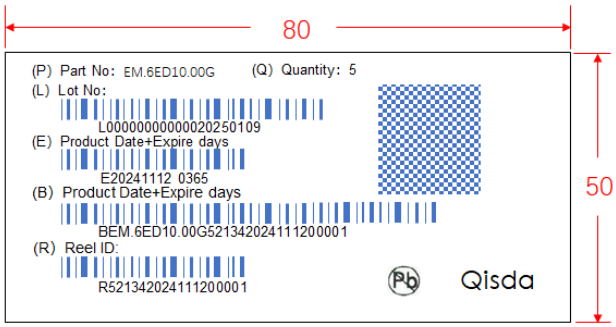

二维码中的内容应包括L码、E码、B码及R码，每项内容用“;”分开，且内容只放于一行之中：注意E码当中有空格

L0000000000xxxxxxxxxx;

E20240304 0365;

BEM.6ED10.00G;

R003372024030400001;

10、客户的代码有2个：

①.台湾钰纬：52134

②.苏州钰纬：82588

出货时需根据客户来选择客户代码。

1、一维码使用精度为7μ的code128码，二维码使用精度为23μ的DataMtrix码；

2、P码：客户P/N号；

3、Q码：数量；

4、L码：Lot No：L00000000000020250109,共21位，其中首位L为标识码，中间12位为0，最后8位为生产日期（年月日）；

5、E码：E20241112 0365,共14位，其中首位E为标识码，中间8位为年月日，**后面1位空格**，最后4位为质保期，若质保期不足4位则前面加0满足4位的长度；

6、B码：BEM.6ED10.00G521342024111200001,共31位，其中首位B为标识码，后面12位为客户P/N号，再后面5位为厂商代码，再8位为日期，再5位为数量00001，若不足5位则在前面加0满足5位的长度；

7、R码：R521342024111200001,共19位，其中首位R为标识码，52134为厂商代码，后面8位为日期，最后5位为产品流水号，若产品流水号不足5位，则在前面加0满足5位的长度，无论料号是否一样，R码均不允许重复；

8、有无铅标识；

9、右下角为Qisda的logo，字体为Century Gothic；

Definition of Box Label

Qisda P/N：EM.6ED10.00G

DIVA P/N：2AAD698003T

英文叙述：LCM+GLASS 24W

品牌：AUO Display Plus

型号：G240UAN01.2

50

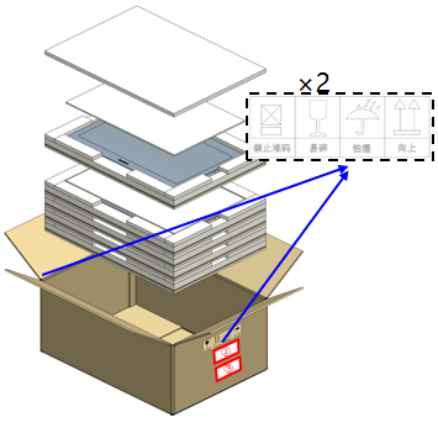

注：以上定义固定，不用修改

Definition and attachment position of Box Label

10.PRECAUTION FOR USING LCM

1. ASSEMBLY PRECAUTIONS
   (1) You must mount a module using holes arranged in four corners or four sides.
   (2) You should consider the mounting structure so that uneven force (ex. Twisted stress) is not applied to the module. And the case on which a module is mounted should have sufficient strength so that external force is not transmitted directly to the module.
   (3) Do not touch, push or rub the exposed polarizers with glass, tweezers or anything harder than HB pencil lead. And please do not rub with dust clothes with chemical treatment.
   (4) Wipe off saliva or water drops as soon as possible. Their long time contact with polarizer causes deformations and color fading.
   (5) Do not open the case because inside circuits do not have sufficient strength.
   (6) Please do not take a LCD module to pieces and reconstruct it. Resolving and reconstructing modules may cause them not to work well.
   (7) Please do not touch metal frames with bare hands and soiled gloves. A color change of the metal frames can happen during a long preservation of soiled LCD modules.
   (8) Please pay attention to handling lead wire of backlight so that it is not tugged in connecting with inverter.
2. OPERATING PRECAUTIONS
   (1) Please be sure to turn off the power supply before connecting and disconnecting signal input cable.
   (2) Please do not change variable resistance settings in LCD module. They are adjusted to the most suitable value. If they are changed, it might happen LCD does not satisfy the characteristics specification
   (3) Be careful for condensation at sudden temperature change. Condensation makes damage to polarizer or electrical contacted parts. And after fading condensation, smear or spot will occur.
   (4) When fixed patterns are displayed for a long time, remnant image is likely to occur.
   (5) Module has high frequency circuits. Sufficient suppression to the electromagnetic interference shall be done by system manufacturers. Grounding and shielding methods may be important to minimize the interference.
   (6) Please consider that LCD backlight takes longer time to become stable of radiation characteristics in low temperature than in room temperature.
3. ELECTROSTATIC DISCHARGE CONTROL
   (1) The operator should be grounded whenever he/she comes into contact with the module. Never touch any of the conductive parts such the copper leads on the PCB and the interface terminals with any parts of the human body.
   (2) The modules should be kept in antistatic bags or other containers resistant to static for storage.
   (3) Only properly grounded soldering irons should be used.
   (4) If an electric screwdriver is used, it should be well grounded and shielded from commutator sparks.
   (5) The normal static prevention measures should be observed for work clothes and working benches; for the latter conductive (rubber) mat is recommended
   (6) Since dry air is inductive to statics, a relative humidity of 50-60% is recommended.
4. STORAGE PRECAUTIONS
   (1) When you store LCDs for a long time, it is recommended to keep the temperature between 0°C-40°C without the exposure of sunlight and to keep the humidity less than 90%RH.
   (2) Please do not leave the LCDs in the environment of high humidity and high temperature such as 60°C 90%RH
   (3) Please do not leave the LCDs in the environment of low temperature; below -20°C.
5. OTHERS
   (1) A strong incident light into LCD panel might cause display characteristics' changing inferior because of polarizer film, color filter, and other materials becoming inferior. Please do not expose LCD module direct sunlight Land strong UV rays
   (2) Please pay attention to a panel side of LCD module not to contact with other materials in preserving it alone.
   (3) For the packaging box, please pay attention to the followings:
      a. Please do not pile them up more than 5 boxes. (They are not designed so.) And please do not turn over.
      b. Please handle packaging box with care not to give them sudden shock and vibrations. And also please do not throw them up.
      c. Packing box and inner case for LCDs are made of cardboard. So please pay attention not to get them wet. (Such like keeping them in high humidity or wet place can occur getting them wet.)
   (4) Waste
      Liquid crystal module products shall not be arbitrarily discarded, the water and soil have a negative impact on the environment, the need to be handled by a qualified unit.
6. LIMITED WARRANTY
   Unless otherwise agreed between DATA IMAGE and customer, DATA IMAGE will replace or repair any of its LCD and LCM which is found to be defective electrically and visually when inspected in accordance with DATA IMAGE acceptance standards, for a period on one year from date of shipment. Confirmation of such date shall be based on freight documents. The warranty liability of DATA IMAGE is limited to repair and/or replacement on the terms set forth above. DATA IMAGE will not responsible for any subsequent or consequential events.

11. OUTLINE DRAWING

DCN/ECN NO.	Zone	DESCRIPTION	DATE	APPROVAL
	N/A	INITIAL RELEASE	2024.12.02	John. Wang

TLCM Spec.

Items	24 LCM		
	Min.	Typ	Max.
Display Resolution	1920×1200		
Display View Angle	U85° D85° L85° R85°		
BLU Forward Current(mA)	-	-	-
BLU Forward Voltage(V)	-	-	-
Center Luminance(nit)	320	400	-
Luminance Uniformity @9 points (Mode)	75%	-	-
Black	-	-	-
Center Chromaticity(1931.Wx/Wy)	Typ-0.03	(0.313,0.329)	Typ+0.03
Center Chromaticity(2931.Wx/Wy)	Typ-0.03	(0.687,0.308)	Typ+0.03
Center Chromaticity(1931.Dx/Dy)	Typ-0.03	(0.210,0.730)	Typ+0.03
Center Chromaticity(2931.Wx/Wy)	Typ-0.03	(0.148,0.056)	Typ+0.03
Color Gamut (@DCI-P3)	-	98%	-

CG+ARAF Spec.

Material	NaCa
Glass CS	≥400Mpa
Glass DOL	≥7um
Treatment	ARAF 眼照
Water Contact Angle	110°min.
Pencil Hardness	≥6H(1000g)
Transmittance(Rsci,400~700nm)	≤93.5%
Reflectance(Rsci,400~700nm)	≤1.8%(1 side)

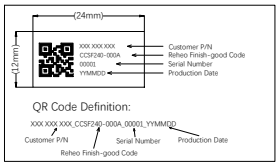

Detail A(Scale:4:1)

Front View

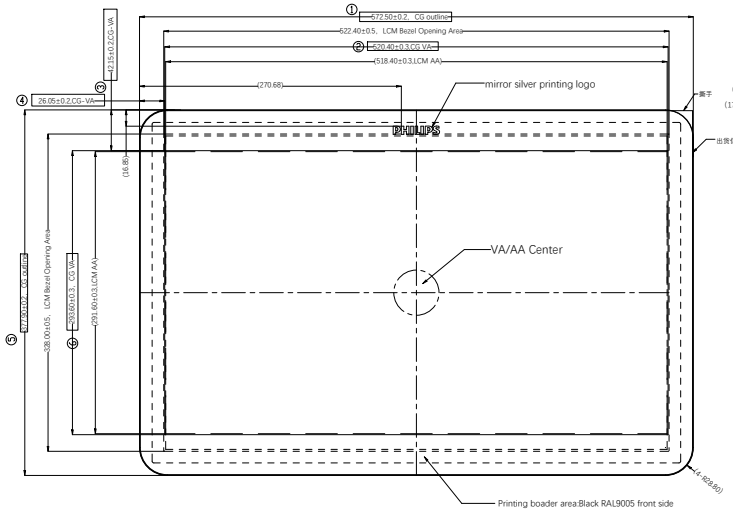

Side View

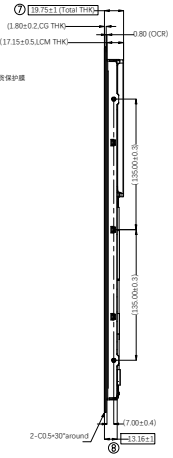

Rear View

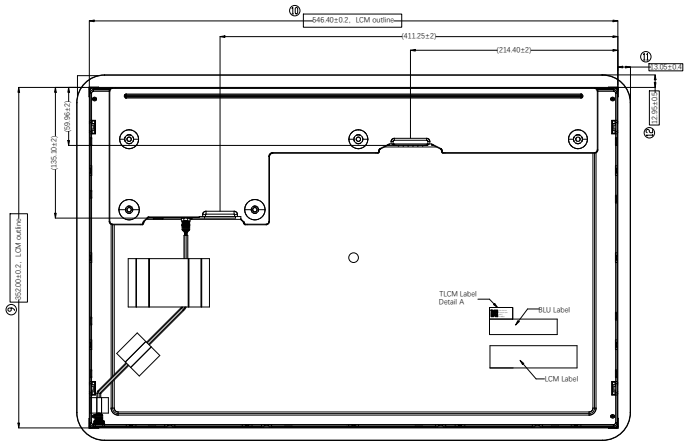

設計驗證
工程課
2025 -11- 12
發行
鈺璋科技開發股份有限公司

Joseph Lu
2024/12/3
尺寸公差確認OK

Notes

1. ◇: Special Characteristic
2. + : Safety Characteristic
3. ▽: Critical Dimension，CPK≥1.33
4. ▭ : IQC/OQC Spec.
5. (..) : Reference Dimension
6. Operation TEMP：0~50℃，Storage TEMP：-20~60℃
7. This Product Must Meet RoHS Compliance Requirement

2AAD698003T(T0211)

Part NO.	DESCRIPTION	MATERIAL	COLOR/FINISH	QTY.	REMARKS
CCSF240-000A					

DRAWN BY	CHECKED BY	APPROVED BY	UNLESS OTHERWISE SPECIFIED DIMENSIONS ARE IN mm TOLERANCES ARE: LINEAR .XX ±0.1 .X ±0.3 ANGLES RADII ±0.1	ANGLE 3rd	TITLE	24 DIVA_TLCM	REV.
liangwei.Chen	Bryan. Zhang	John. Wang		SCALE 1/1			0
2024.12.02	2024.12.02	2024.12.02					
REHEO	睿合科技有限公司	SECTION	技术开发部	SIZE A0	DWG NO.	CCSF240-000A-20241202R0	SHEET 1/1

12. PACKAGE INFORMATION

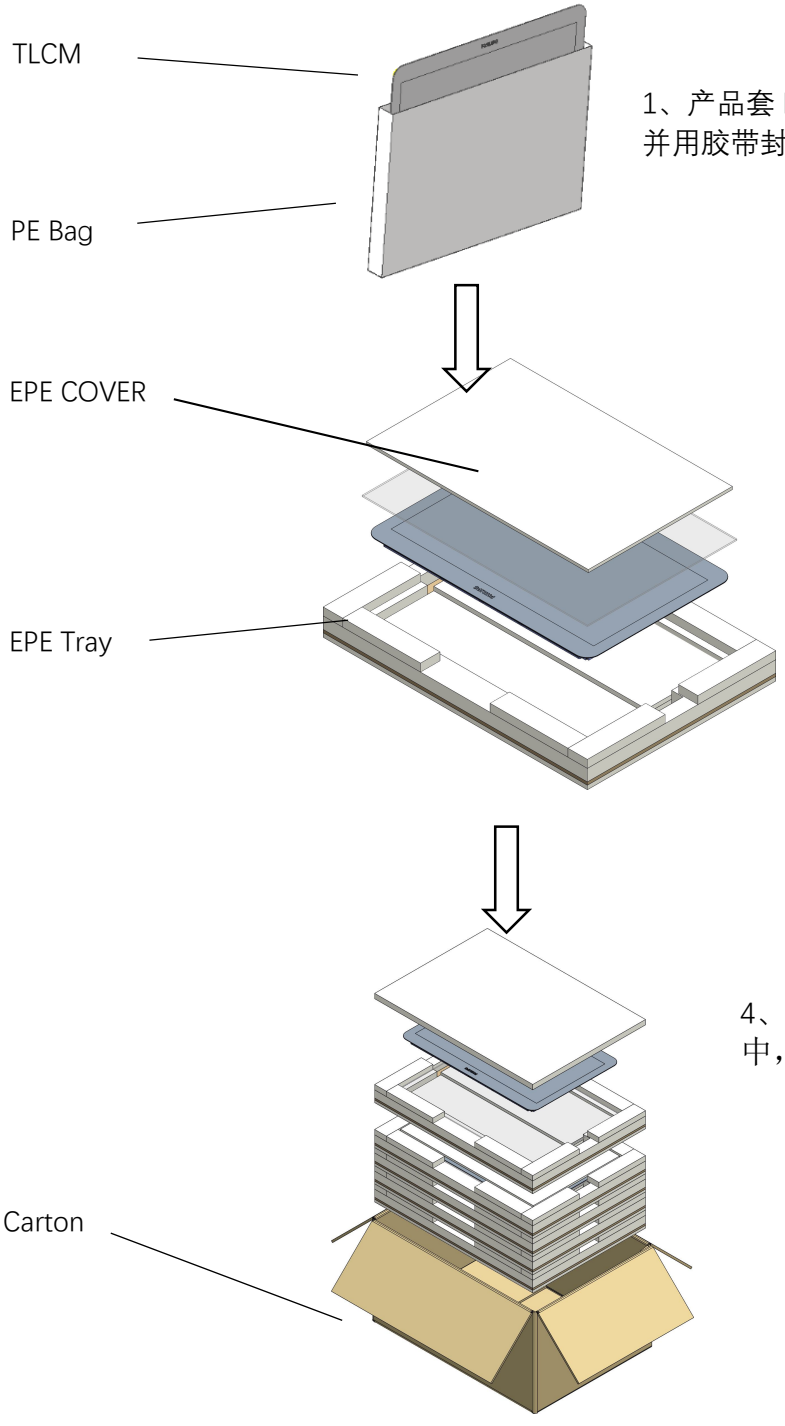

1、产品套 PE 袋：产品外侧套 1pcs PE 袋，并在CG面放一个EPE垫片并用胶带封口。1pcs 袋子 /产品

2、装 EPE 盒：
将套好袋的产品盖板朝上放入 EPE Tray中。1pcs 产品/ EPE Tray

3、盖 EPE 盖：每个 EPE Tray 上方盖 1 个 EPE COVER

4、将装好的EPE Tray放进纸箱中，5pcs/箱

CARTON SIZE		655*315*460mm	
QUANTITY PER CARTON		5pcs	
N.W.	20KG	G.W.	22.2KG

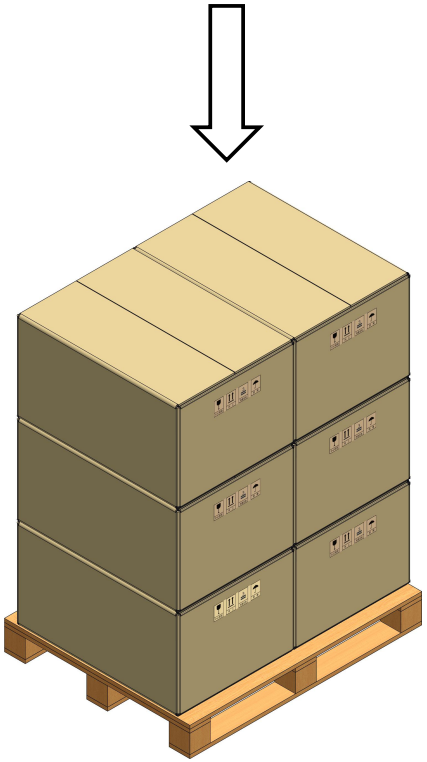

6、打包托盘：一层放2个纸箱共3层，放上纸护角并用打包带困扎牢固.5*2*3=30pcs产品/托

注：若出货不满一托，也必须搭载栈板出货，不可以包装箱直接出货