REV.	DATE	DESCRIPTION	BY	APVD
0	2025/11/13	FIRST RELEASE	Owen	

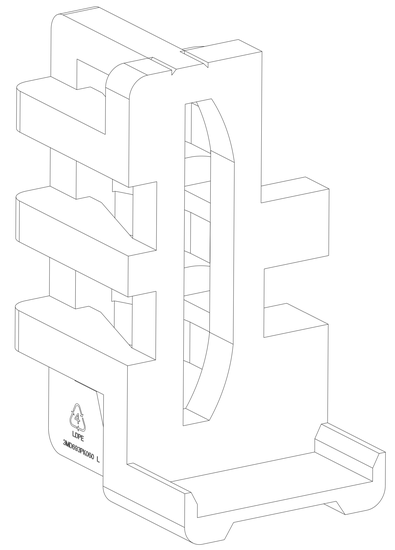

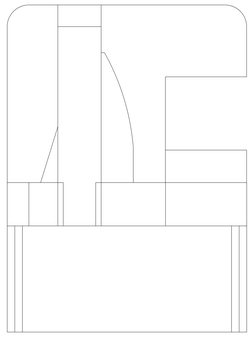

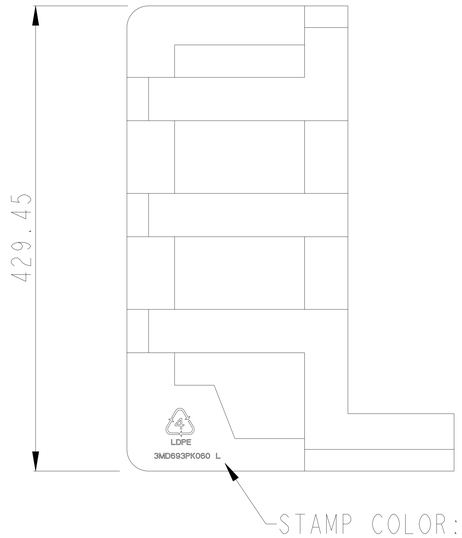

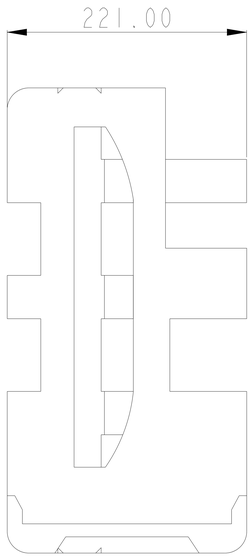

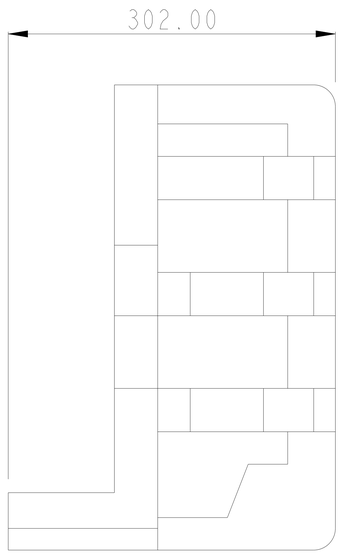

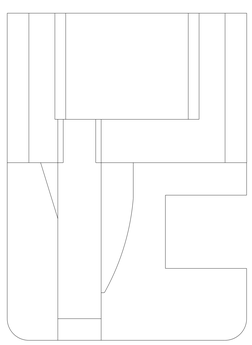

NOTES:
1. MATERIAL: EPE(EXPANDABLE POLYETHYLENE).
2. COLOR: WHITE.
3. DENSITY: 22kg/m^3.
4. TOLERANCE: ±3mm.
5. IQC INSPECTION DOCUMENT NO: QWI-019.

RANGE OF DIMENSION	TOLERANCE CLASS DESIGNATION		
	V		
	fine	medium	coarse
UP TO 3	±0.05	±0.1	±0.2
OVER 3~6	±0.05	±0.1	±0.3
OVER 6~30	±0.1	±0.2	±0.5
OVER 30~120	±0.15	±0.3	±0.8
OVER 120~400	±0.2	±0.5	±1.2
OVER 400~1000	±0.3	±0.8	±2.0
OVER 1000~2000	±0.5	±1.2	±3.0
OVER 2000~4000	-	±2.0	±8.0
ANGLE ±1° (±1.75/100)			

THIRD ANGLE PROJECTION

UNITS: mm	SCALE: 1/2	SHEET: 1 OF 1	MODEL NO.: QD11_21.5"		
MATERIAL: EPE		TREATMENT:			
DSGD by	Owen	Nov-13-25	PART NAME:	CUSHION EPE-L QD2181A1-P	
CHK by			DIVA P/N:	3MD693PK060	
APVD by			Qisda NO.:		
APVD NO.:		3D FILE NAME: CUSHION_EPE-L	DIVA Laboratories ,Ltd.		