3MD539PA100 / 3MD539PA110 / 3MD539PA130透光度規格

Item	Value
Luminance capability	20 +/- 10 Cd/m2

測試儀器: CA310

測試範例:









測試值 19.36 Cd/m2

設計驗證
工程課
2025 -12- 17
發行











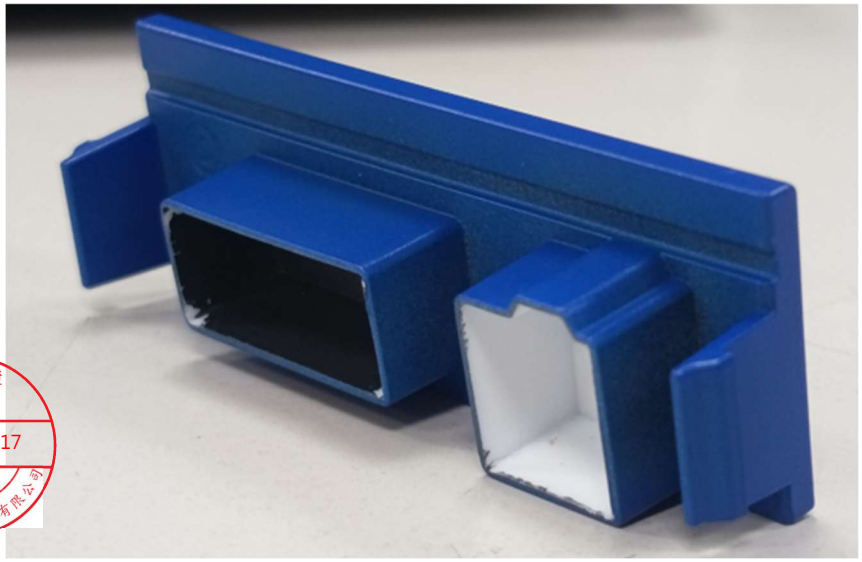

設計驗證
工程課
2025 -12- 17
發行
鈺邁科技開發股份有限公司

展絃科技有限公司

模 具 產 品 承 認 書

客戶名稱	鈺緯科技開發股份有限公司
模　　號	JS-1911265
客戶料號	樣品名稱
3MD539PA100(M3294)	BADGE, GI(ALTURION)

主管	承辦	
黃正皇	李怡瑩	

客　戶　確　認

工 程	品 保	採 購
設計驗證 工程課 2025 -12- 17 發行 鈺緯科技開發股份有限公司		

模 具 照 片



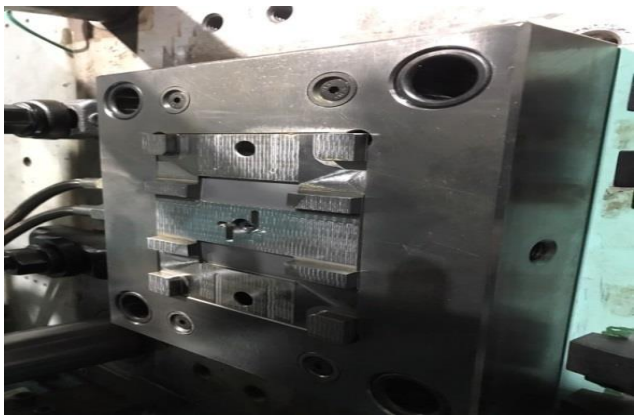



成 品 照 片

原料品牌： 帝人

料 號 ：LV2250Y

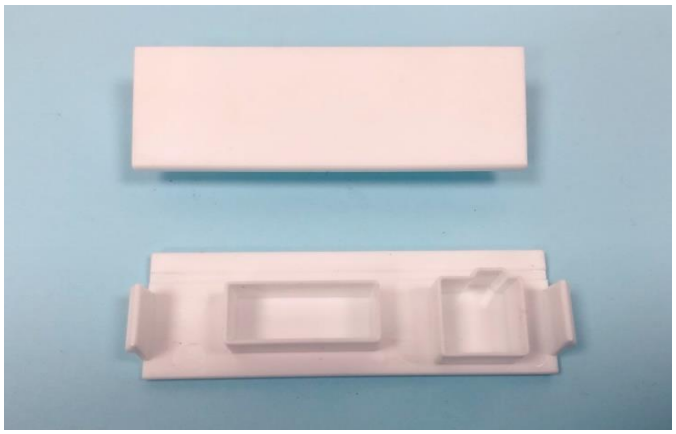

打 光 咬 花 承 認

	咬花型號
	MT-11010

烤 漆 流 程

一 、背面真空電鍍遮鍍(搭配遮鍍治具)



二 、正反白漆噴塗



三 、正反黑漆噴塗(搭配遮噴治具)

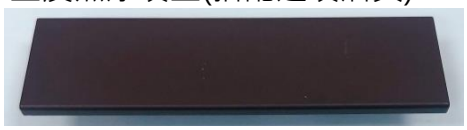

四、面漆二道噴塗(搭配遮噴治具)

五、進行印刷+雷雕(搭配雷雕治具)



後 加 工

印　刷	✔
烤　漆	✔
雷　雕	✔
電　鍍	✔
燙　金	
埋　釘	
熱　熔	
組　立	
包　膜	
其　他	

出貨包裝方式



TRAY 盤包裝數量：　1 TRAY盤 36 PCS



一層放置 2TRAY盤 ，左右各放24層

一箱共 1728 PCS

REV.	DATE	DESCRIPTION	BY	APVD
A	04.Jun.2025	FIRST RELEASE	JOSEPH	LASLIE

設計驗證
工程課
2025-12-17
發行



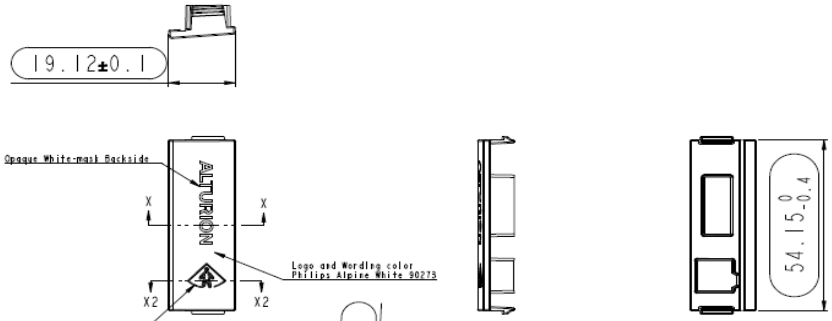

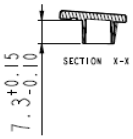

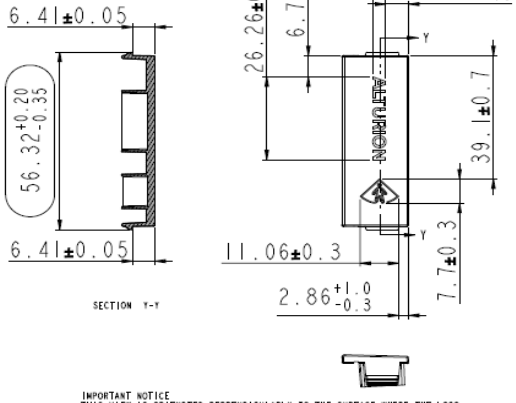

IMPORTANT NOTICE
THIS VIEW IS ORIENTED PERPENDICULARLY TO THE SURFACE WHERE THE LOGO AND WORDING ARE MARKED.
OTHER VIEWS EXPLOSION ARE ORIENTED ACCORDING TO THE DEMOLDING DIRECTION OF THE SUBSTRATE.

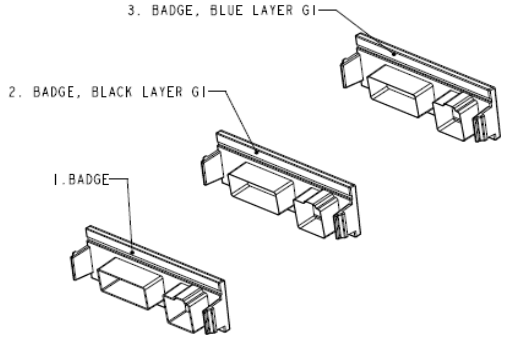

LAYERS EXPLOSION
FOR ILLUSTRATIVE REFERENCE ONLY

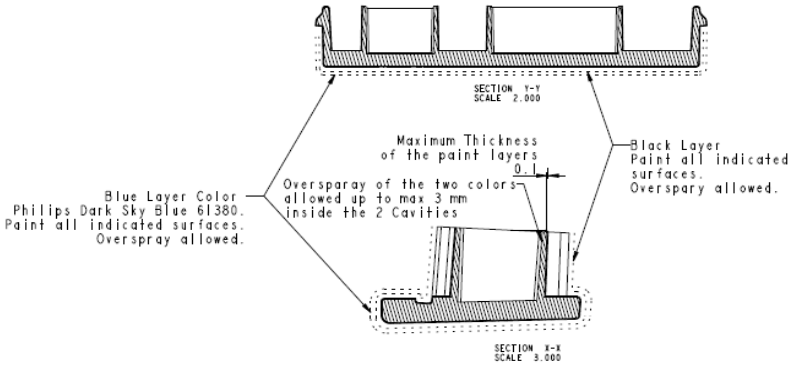

NOTES:
1. MATERIAL: PC (LV2250Y) PHILIPS WHITE 90273
   TRANSLUCENT AMBER
2. TEXTURE : MT11010
3. PRINTING: COLOR ALPINE WHITE 90273
4. PAINTING:
   PAINT AS INDICATED.
   (1). BLACK
   (2). PHILIPS COLOR NO.:161380 DARK SKY BLUE
   PAINT GLOSS G025 SATIN ACCORDING TO ISO2813 60°
   OVERSPRAY PERMITTED, EXCEPT WHERE INDICATED.
   PART IS PAINTED 2 LAYERS AS INDICATED.
   FOR APPROVE COLOR AND MATERIAL REFER TO DOCUMENT 453561157710005.
5. LOGO AND WORDING ACCORDING TO FILE.
   LOGO AND WORDING ALTURION MUST APPEAR AS COLOR ALPINE WHITE 90273,
   CONTOURS MUST BE CLEARLY MARKED.
   ETCHING OF THE 2 PAINT LAYERS CAN BE DONE VIA MILLING, LASER OR MASKING.
   FOR LOGO AND WORDING REFER TO DOCUMENT D002056526, VMI4.0 DISPLAY MODULE GI NAME
   BADGE MUS PGD FILE.
6. COSMETIC REQUIREMENTS ACCORDING TO PHILIPS STANDARD 9060-0488, TABLE A.7. CLASS B.
7. GENERALLY THICKNESS:2.4
   WARPAGE AND FLATNESS TOLERANCE:≤0.3
8. ☐ INSPECTION DIMENSION.
9. FOR DETAILED GEOMETRY AND UNSPECIFIED DIMENSION REFER TO CAD DRAWING FILE.
10. RoHS COMPLIANT.

RANGE OF DIMENSION	TOLERANCE CLASS DESIGNATION V		
	fine	medium	coarse
0.5 UP TO 3	±0.05	±0.1	±0.2
OVER 3-6	±0.05	±0.1	±0.3
OVER 6-30	±0.1	±0.2	±0.5
OVER 30-120	±0.15	±0.3	±0.8
OVER 120-400	±0.2	±0.5	±1.2
OVER 400-1000	±0.3	±0.8	±2.0
OVER 1000-2000	±0.5	±1.2	±3.0
ANGLE ±1° (±1.75/100)			

THIRD ANGLE PROJECTION

UNITS: mm	SCALE: 1/1	SHEET: 1 OF 1	MODEL NO.: VMI4		
MATERIAL:	PC	TREATMENT:	SEE NOTES		
DSGD by	JOSEPH	2025-04-10	PART NAME:	BADGE, GI (ALTURION)	
CHK by	JOSEPH	2025-04-10	DIVA P/N:	3MD539PA100 (M3294)	
APVD by	LASLIE	2025-04-10	Philips NO.:	300014364181	
APVD NO.:		3D FILE NAME: NAMEBADGE	DIVA Laboratories ,Ltd.		