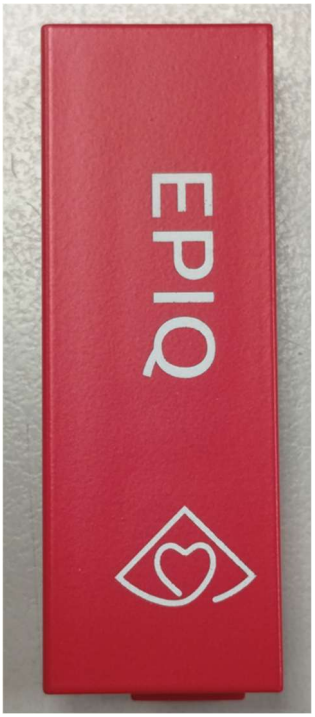



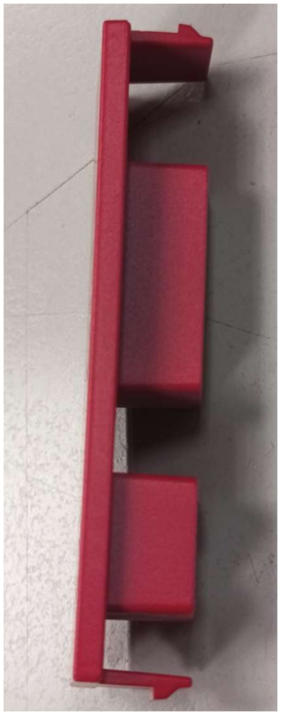



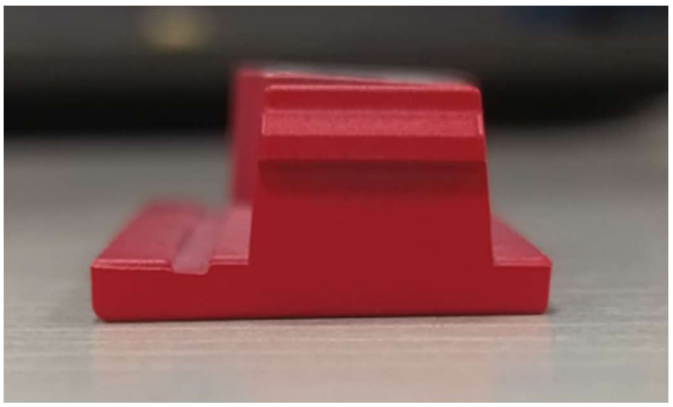

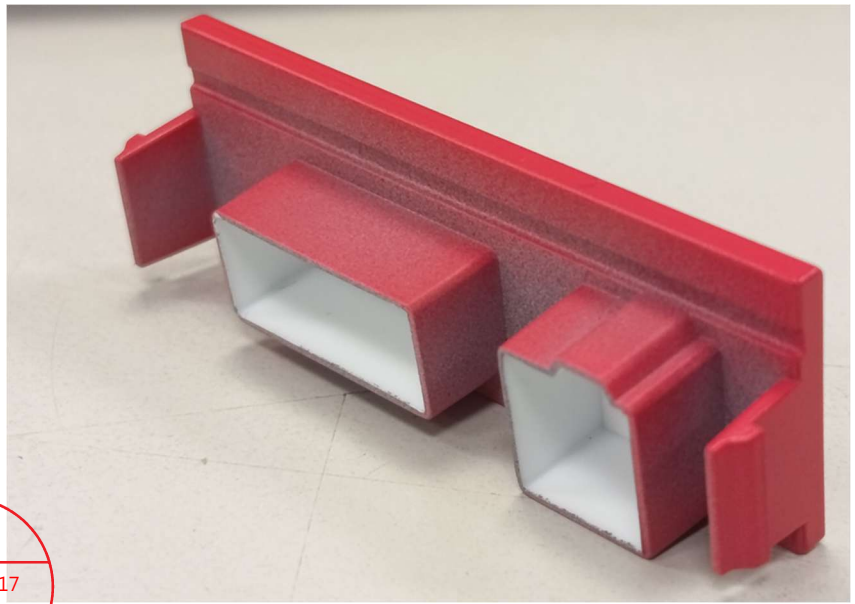

設計驗證
工程課
2025 -12- 17
發行
鈺德科技開發股份有限公司

展絃科技有限公司

模 具 產 品 承 認 書

客戶名稱	鈺緯科技開發股份有限公司
模　　號	JS-1911265
客戶料號	樣品名稱
3MD539PA120(M3294)	BADGE, CV (RED)

主管	承辦	
黃正皇	李怡瑩	

客　戶　確　認

工 程	品 保	採 購
設計驗證 工程課 2025 -12- 17 發行 鈺緯科技開發股份有限公司		

模 具 照 片



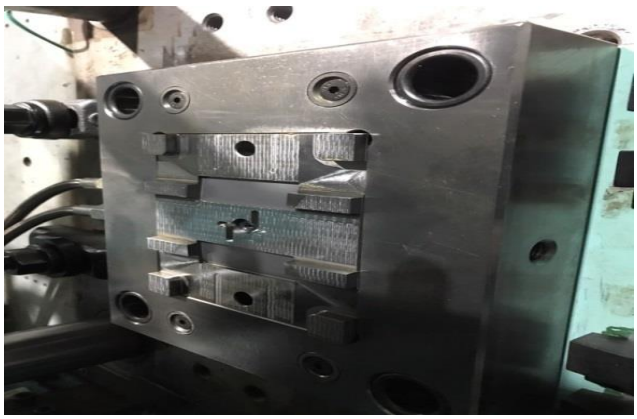



成 品 照 片

原料品牌： 帝人

料 號 ：LV2250Y

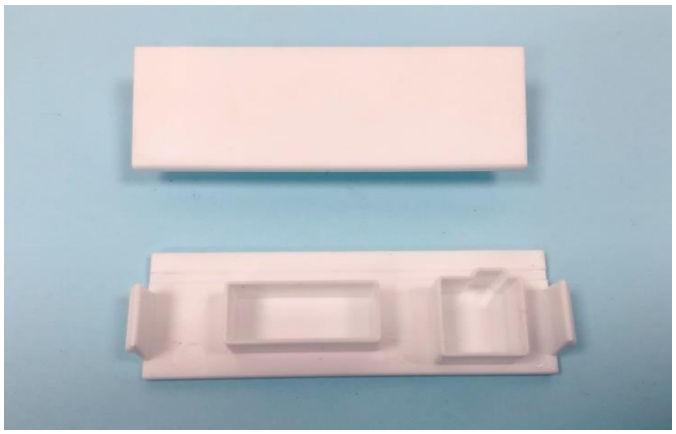

打 光 咬 花 承 認

	咬花型號
	MT-11010

烤 漆 流 程

一 、背面真空電鍍遮鍍(搭配遮鍍治具)



二 、正反白漆噴塗



三 、正反黑漆噴塗(搭配遮噴治具)

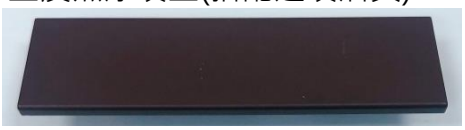

四、面漆二道噴塗(搭配遮噴治具)

五、進行印刷+雷雕(搭配雷雕治具)



後 加 工

印　刷	
烤　漆	✔
雷　雕	✔
電　鍍	✔
燙　金	
埋　釘	
熱　熔	
組　立	
包　膜	
其　他	

出貨包裝方式



TRAY 盤包裝數量：　1 TRAY盤 36 PCS



一層放置 2TRAY盤 ，左右各放24層

一箱共 1728 PCS

REV.	DATE	DESCRIPTION	BY	APVD
A	2025-05-13	FIRST RELEASE	JOSEPH	LASLIE

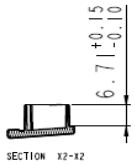

SECTION X2-X2

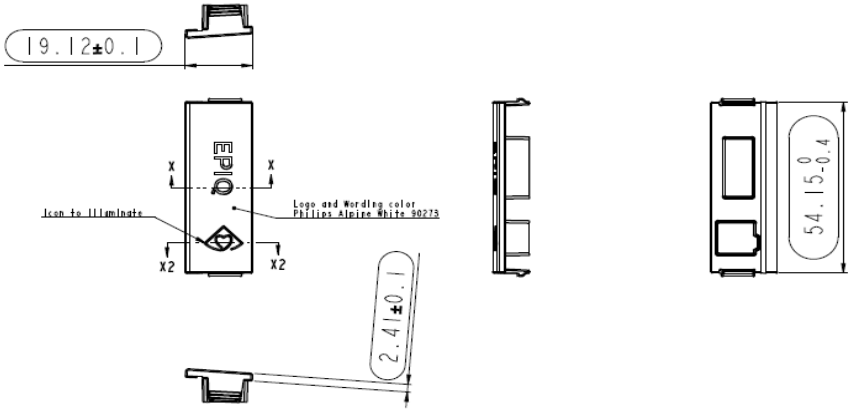

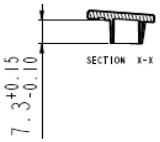

SECTION X-X

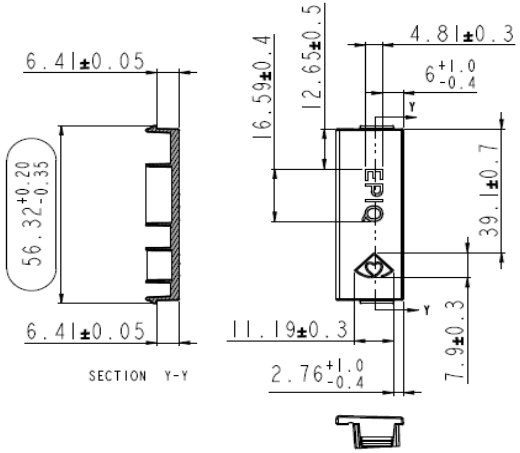

SECTION Y-Y

IMPORTANT NOTICE
THIS VIEW IS ORIENTED PERPENDICULARLY TO THE SURFACE WHERE THE LOGO AND WORDING ARE MARKED
OTHER VIEWS EXPLOSION ARE ORIENTED ACCORDING TO THE DEMOLDING DIRECTION OF THE SUBSTRATE.

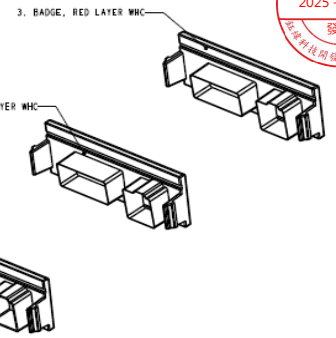

LAYERS EXPLOSION
FOR ILLUSTRATIVE REFERENCE ONLY

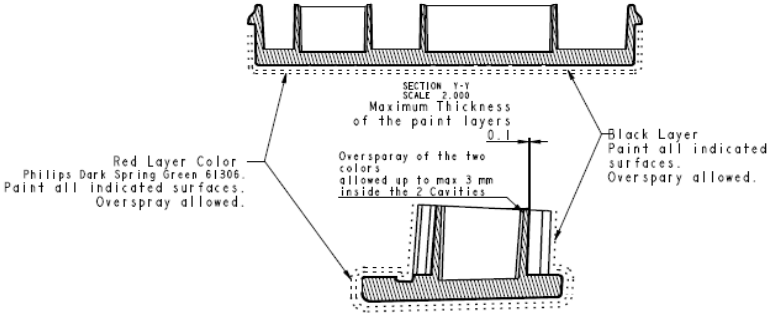

NOTES:
1. MATERIAL: PC (LV2250Y) PHILIPS WHITE 90273
   TRANSLUCENT AMBER
2. TEXTURE : MT11010
3. PAINTING:
   PAINT AS INDICATED.
   (1). BLACK
   (2). PHILIPS COLOR NO.:RED, PANTONE 186C
   PAINT GLOSS G30 ACCORDING TO ISO2813 60°
   OVERSPRAY PERMITTED, EXCEPT WHERE INDICATED.
   PART IS PAINTED 2 LAYERS AS INDICATED.
4. LOGO AND WORDING ACCORDING TO FILE.
   LOGO AND WORDING EPIQ MUST APPERAR AS COLOR ALPINE WHITE 90273,
   CONTOURS MUST BE CLEARLY MARKED.
   ETCHING OF THE 2 PAINT LAYERS CAN BE DONE VIA MILLING, LASER OR MASKING.
   FOR LOGO AND WORDING REFER TO DOCUMENT EPIQ DISPLAY MODULE CV NAME
   BADGE MUS PGD FILE.
5. SOFTWARE SECTION RIBS, ALSO LONGITUDINAL.
6. COSMETICAL REQUIREMENTS ACCORDING TO PHILIPS STANDARD 9060-0488, TABLE A.7. CLASS B.
7. GENERALLY THICKNESS:2.4
8. ⬭ INSPECTION DIMENSION.
9. UNSPECIFIED DIMENSION REFER TO CAD DRAWING FILE.
10. WARPAGE AND FLATNESS TOLERANCE : ≤0.3
11. RoHS COMPLIANT.

RANGE OF DIMENSION	TOLERANCE CLASS DESIGNATION V		
	fine	medium	coarse
0.5 UP TO 3	±0.05	±0.1	±0.2
OVER 3-6	±0.05	±0.1	±0.3
OVER 6-30	±0.1	±0.2	±0.5
OVER 30-120	±0.15	±0.3	±0.8
OVER 120-400	±0.2	±0.5	±1.2
OVER 400-1000	±0.3	±0.8	±2.0
OVER 1000-2000	±0.5	±1.2	±3.0
ANGLE ±1° (±1.75/100)			

THIRD ANGLE PROJECTION

DSGD by	JOSEPH	2025-07-29
CHK by	LASLIE	2025-07-29
APVD by	LASLIE	2025-07-29
APVD NO.:		

UNITS: mm	SCALE: 1/1
SHEET: 1OF1	MODEL NO.: 24" EPIQ PREMIUM
MATERIAL: PC	TREATMENT: SEE NOTES
PART NAME:	BADGE, CV (RED)
DIVA P/N:	3MD539PA120 (M3294)
Philips NO.:	300015844481
3D FILE NAME:	24_EPIQ_BADGE

DIVA Laboratories ,Ltd.

設計驗證
工程課
2025-12-17
發行