Zener Voltage Regulators

200 mW SOD-323 Surface Mount

LUDZS*BT1G SERIES



SOD-323

FEATURES

- Non-wire bonding structure improves
- High demand voltage range (3.6V-36V)
- This is a Pb-Free device

CONSTRUCTION

- Silicon epitaxial planar
- We declare that the material of product compliance with RoHS requirements.
- Halogen Free Parts.
- Moisture Sensitivity: Level 1 per J-STD-020A

MARKING DIAGRAM



xx=Device Marking Code
M =Date Code

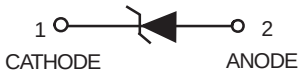

ORDERING INFORMATION

Device	Package	Shipping
LUDZS*BT1G	SOD-323	3000/Tape&Reel
LUDZS*BT3G	SOD-323	10000/Tape&Reel

*See specific marking table.

ABSOLUTE MAXIMUM TATINGS (Ta=25°C)

Parameter	Symbol	Limits	Unit
Power dissipation	P	200	mW
Junction temperature	Tj	125	°C
Storage temperature	Tstg	–55 to +150	°C
Operating temperature	Topr	–55 to +150	°C

DEVICE MARKING CODE

Device	Marking	Device	Marking	Device	Marking
LUDZS2.0BT1G	02	LUDZS5.6BT1G	C2	LUDZS16BT1G	55
LUDZS2.2BT1G	12	LUDZS6.2BT1G	E2	LUDZS18BT1G	65
LUDZS2.4BT1G	22	LUDZS6.8BT1G	F2	LUDZS20BT1G	75
LUDZS2.7BT1G	32	LUDZS7.5BT1G	H2	LUDZS22BT1G	85
LUDZS3.0BT1G	42	LUDZS8.2BT1G	J2	LUDZS24BT1G	95
LUDZS3.3BT1G	52	LUDZS9.1BT1G	L2	LUDZS27BT1G	A5
LUDZS3.6BT1G	62	LUDZS10BT1G	05	LUDZS30BT1G	C5
LUDZS3.9BT1G	72	LUDZS11BT1G	15	LUDZS33BT1G	E5
LUDZS4.3BT1G	82	LUDZS12BT1G	25	LUDZS36BT1G	F5
LUDZS4.7BT1G	92	LUDZS13BT1G	35	–	–
LUDZS5.1BT1G	A2	LUDZS15BT1G	45	–	–

LUDZS*BT1G

ELECTRICAL CHARACTERISTICS (Ta=25°C)

Device	Zener voltage			Operating resistance		Rising operating resistance		Reverse curre	
	V_Z(V)			Z_Z(Ω)		Z_{zk}(Ω)		I_R(μA)	
	Min.	Max.	I_Z (mA)	Max.	I_Z (mA)	Max.	I_Z (mA)	Max.	V_R (V)
LUDZS2.0BT1G	2.020	2.200	5	100	5	1000	0.5	120	0.5
LUDZS2.2BT1G	2.220	2.410	5	100	5	1000	0.5	120	0.7
LUDZS2.4BT1G	2.430	2.630	5	100	5	1000	0.5	100	1.0
LUDZS2.7BT1G	2.690	2.910	5	110	5	1000	0.5	100	1.0
LUDZS3.0BT1G	3.010	3.220	5	120	5	1000	0.5	50	1.0
LUDZS3.3BT1G	3.320	3.530	5	120	5	1000	0.5	20	1.0
LUDZS3.6BT1G	3.600	3.845	5	100	5	1000	1.0	10	1.0
LUDZS3.9BT1G	3.890	4.160	5	100	5	1000	1.0	5	1.0
LUDZS4.3BT1G	4.170	4.430	5	100	5	1000	1.0	5	1.0
LUDZS4.7BT1G	4.550	4.750	5	100	5	800	0.5	2	1.0
LUDZS5.1BT1G	4.980	5.200	5	80	5	500	0.5	2	1.5
LUDZS5.6BT1G	5.490	5.730	5	60	5	200	0.5	1	2.5
LUDZS6.2BT1G	6.060	6.330	5	60	5	100	0.5	1	3.0
LUDZS6.8BT1G	6.650	6.930	5	40	5	60	0.5	0.5	3.5
LUDZS7.5BT1G	7.280	7.600	5	30	5	60	0.5	0.5	4.0
LUDZS8.2BT1G	8.020	8.360	5	30	5	60	0.5	0.5	5.0
LUDZS9.1BT1G	8.850	9.230	5	30	5	60	0.5	0.5	6.0
LUDZS10BT1G	9.770	10.210	5	30	5	60	0.5	0.1	7.0
LUDZS11BT1G	10.760	11.220	5	30	5	60	0.5	0.1	8.0
LUDZS12BT1G	11.740	12.240	5	30	5	80	0.5	0.1	9.0
LUDZS13BT1G	12.910	13.490	5	37	5	80	0.5	0.1	10.0
LUDZS15BT1G	14.340	14.980	5	42	5	80	0.5	0.1	11.0
LUDZS16BT1G	15.850	16.510	5	50	5	80	0.5	0.1	12.0
LUDZS18BT1G	17.560	18.350	5	65	5	80	0.5	0.1	13.0
LUDZS20BT1G	19.520	20.390	5	85	5	100	0.5	0.1	15.0
LUDZS22BT1G	21.540	22.470	5	100	5	100	0.5	0.1	17.0
LUDZS24BT1G	23.720	24.780	5	120	5	120	0.5	0.1	19.0
LUDZS27BT1G	26.190	27.530	5	150	5	150	0.5	0.1	21.0
LUDZS30BT1G	29.190	30.690	5	200	5	200	0.5	0.1	23.0
LUDZS33BT1G	32.150	33.790	5	250	5	250	0.5	0.1	25.0
LUDZS36BT1G	35.070	36.870	5	300	5	300	0.5	0.1	27.0

Notes) 1. The Zener voltage (V_Z) is measured 40ms after power is supplied.
2. The operating resistances (Z_Z, Z_{ZK}) are measured by superimposing a minute alternating current on the regulated current (I_Z).

LUDZS*BT1G

ELECTRICAL CHARACTERISTIC CURVES (Ta=25°C)

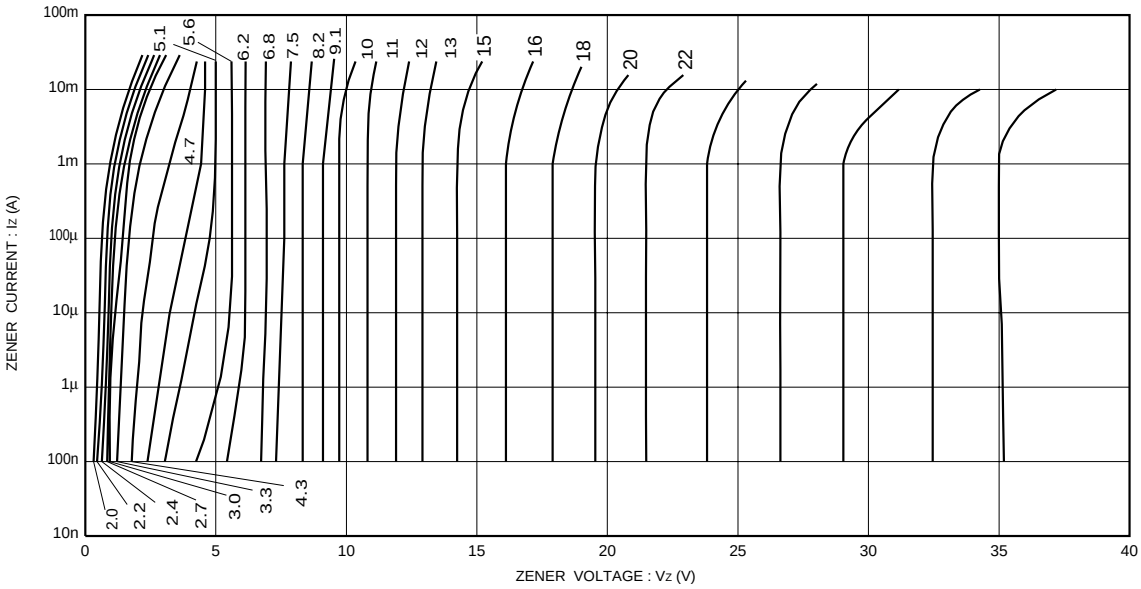

Fig.1 Zener voltage characteristics

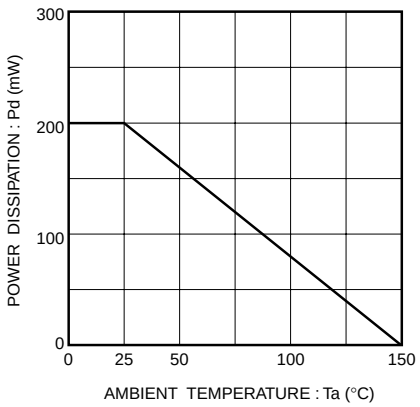

Fig.2 Derating curve

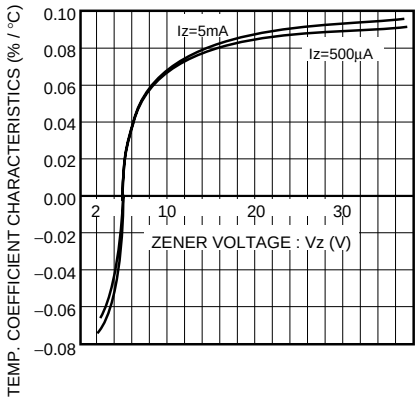

Fig.3 Zener voltage-temp. coefficient characteristics

LUDZS*BT1G

SOD–323

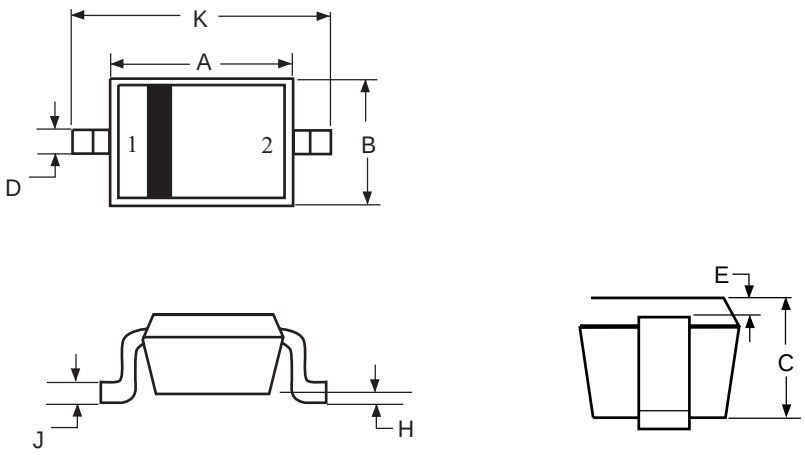

DIN	MILLIMETERS		INCHES	
	MIN	MAX	MIN	MAX
A	1.60	1.80	0.063	0.071
B	1.15	1.35	0.045	0.053
C	0.80	1.00	0.031	0.039
D	0.25	0.40	0.010	0.016
E	0.15 REF		0.006 REF	
H	0.00	0.10	0.0000	0.004
J	0.089	0.177	0.0035	0.0070
K	2.30	2.7	0.091	0.106

NOTES:
1. DIMENSIONING AND TOLERANCING PER ANSI Y14.5M, 1982.
2. CONTROLLING DIMENSION: MILLIMETERS
3. LEAD THICKNESS SPECIFIED PER L/F DRAWING WITH SOLDER PLATING.
4. 477-01 OBSOLETE, NEW STANDARD 477-22.

PIN 1: CATHODE
2: AN