版本 REV.	日 期 DATE	DCN NO.	变更内容 DESCRIPTION	制图 DRAWN

成品规格图号DRAWING NO. S1311008S

No. of Contacts	DIMENSIONS				
	A	B	C	D	E
2	1.25	7.25	3.05	2.35	4.25
3	2.50	8.50	4.30	3.60	5.50
4	3.75	9.75	5.55	4.85	6.75
5	5.00	11.00	6.80	6.10	8.00
6	6.25	12.25	8.05	7.35	9.25
7	7.50	13.50	9.30	8.60	10.50
8	8.75	14.75	10.55	9.85	11.75
9	10.00	16.00	11.80	11.10	13.00
10	11.25	17.25	13.05	12.35	14.25
11	12.50	18.50	14.30	13.60	15.50
12	13.75	19.75	15.55	14.85	16.75
13	15.00	21.00	16.80	16.10	18.00
14	16.25	22.25	18.05	17.35	19.25
15	17.50	23.50	19.30	18.60	20.50

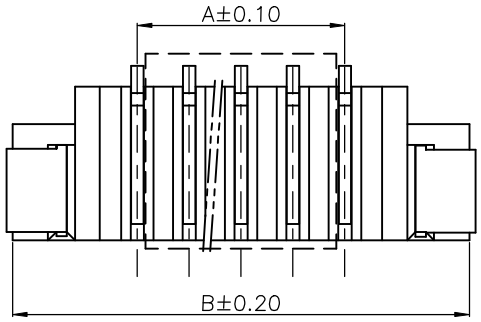

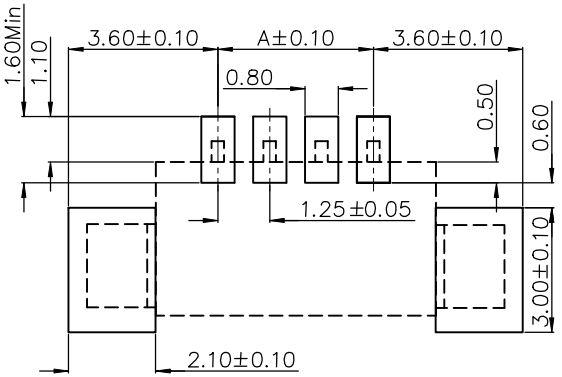

Ordering Code:

S1311 – XX S XX – S 0 2 – X X
① ② ③ ④ ⑤ ⑥ ⑦

① Series NO.

② Circuits number

③ S:straight angle

④ Plating Code:

⑤ Color is Natural

⑥ Packing:
Null:Tube
K:Reel
R:Reel+PAD

⑦ NONE: Halogen Part
H: Halogen Free Part

Definition			Code
◎Tin plated:			VA
◎Matte Tin plated:			WA
◎Gold plated:			
flash	VB	15υ"	VF
10υ"	VE	30υ	VJ
◎Duplex plating :			
flash	VK	15υ"	VP
10υ"	VN	30υ"	VU
◎Standard: B Prefix "V" "W" means lead free plating			

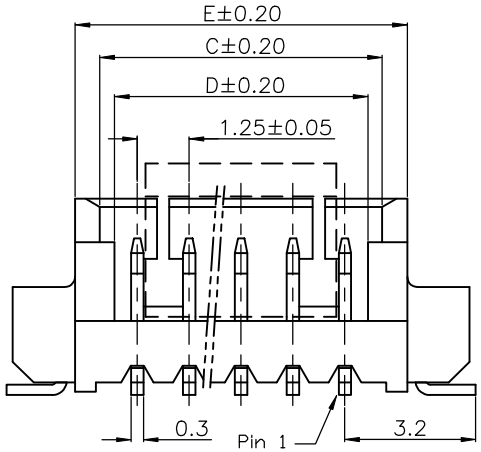

RECOMMANDED PCB LAYOUT

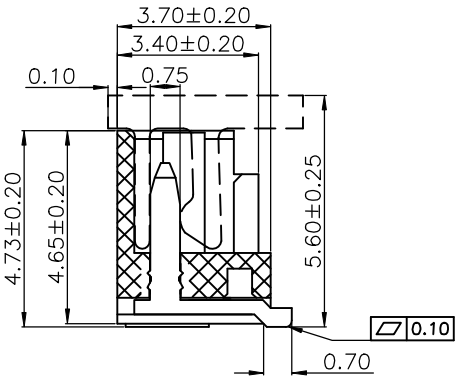

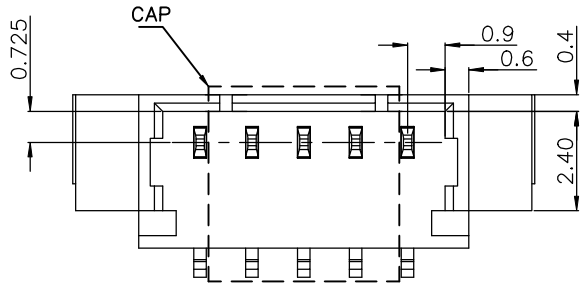

NOTES:
1.Voltage rating: AC 125V DC
2.Current rating: AC,DC,1A
3.withstand voltage: AC 250V/min
4.Insulation resistance: 100M ohm min.
5.Temperature range: −25°C~+85°C
6.Contact resistance: 20m ohm max.
7.Material:
Housing: LCP , UL94 V−0. Color Natural
Contact: Brass/Gold or 100u" Min. Tin;
50u" Min. Ni−plated
Solder Tabs: Brass/Gold or 100u" Min. Tin;
50u" Min. Ni−plated

GENERL TOLERANCE		制 图 (DR.)		料 号 PART NO.	S1311-XXSXX-S02-XX	版 本 REV.	A
X.±0.30	X.°±2°	审 核 (CHK.)		品 名 TITLE	1.25 PITCH CONNECTOR	页 次 SHEET	1/1
.X±0.25	.X°±1°	核 准 (APPD.)		客户料号 CUTM.NO.			
.XX±0.20	.XX°±0.5°	第1版 (OR.D.)	2012.10.09				
.XXX±0.10	.XXX°±0.5°	单 位 UNITS	MM 比 例 SCALE 1:1				

苏州新亚电通股份有限公司
SUZHOU XINYA ELECTRIC COMMUNICATION Co.,LTD.