DIVA Labs.

ECR (Engineering Change Request)

Proposed Change：	☐1. Design modification 設計修改 ☑2. Material change 材料變更 ☐3. Manufacturer change 製造商變更 ☐4. Factory change 工廠變更 ☐5. Process sequency change 工序變更 ☐6. Equipment / Tooling change 設備/ 模具變更 ☐7. Process / Method / Condition change 加工流程/方法/條件變更 ☐8.Add second source 新增替代料 ☐9. Others 其他：內容沒變動	**Initiator**	Kelly 0209 李美琪
Reason for Change：	MEE系列_ 空白原物料增加和變動，執行3MD4XLB570換成3MD4XLB460等 Adding and changing blank raw materials	**EC No：**	EC2512073
Model / Part No.：	1A40190007 AD-BOARD11-2 ，1A40190008 AD-BOARD12，1A40190009 AD-BOARD12-2，1A40190010 AD-BOARD12-3 1A40190011 AD-BOARD13，1A2A2123Y101900 TSD-PT212-CB，1A2A2123Y101901 TSD-PT212-CW，1A1A24232101900 TSD-PT243-CW-2CT，1A50190002 TSD-TS1-W，1A2A24162101900 TSD-PT241W-AHN，1A2A24162101901 TSD-PT241W-1AH	**Issue Date：**	2025/12/29
		Requester Dept.：	DV11S001 DV11R002
Implementation Type：	☐1. Immediately Change 立即切換 ☑2. Running Change 自然切換 ☐3. Other 其他：	**Customer Approval：**（confirmed by PM）	☑Needed ☐Not needed

Material Change Description（Please add pages as needed if the provided space is insufficient.）
物料變更說明（如不敷使用請逕行增頁）

No.	Subassembly		Part No.	Description	Q'ty	Location	Stock	Remark
1	2AAD2540012 1A40190008 1A40190009 1A40190010 1A40190011	B						ADD
		A	3MDL4XLB460	CARTON LABEL (BLANK,88*22mm)	0.025		18030	
2	1A2A2123Y101900 1A2A2123Y101901	B						ADD
		A	3MDL4XLB460	CARTON LABEL (BLANK,88*22mm)	2		18030	

Comments 會簽意見

R&D		Department 會簽部門								Approval
Initiator	Initiator's Direct Supervisor	DQE	PM	Sales	PE	PMC	SCM	PD	QA	R&D Director
Kelly 1229 1025	Michael 1230 1400 Lillie 1229 1100	[illegible] 1230 1130	Ryan 1230	Oli 1230 1405	[illegible] 1231 1530 Hanan 1231 1030	Terry 0102 1200 [illegible] 0102	Chris 1/8	Dowen 1231 1700 Joanne 1231 1630	[illegible] 0108	Michael ~~0109~~ 0209 ~~1135~~ 1400

ECR (Engineering Change Request)

Material Change Description (Please add pagesor row as needed if the provided space is insufficient.)
物料變更說明（如不敷使用請逕行增頁或增列）

No.	Subassembly		Part No.	Description	Q'ty	Location	Stock	Remark
3	1A1A24232101900 1A50190002 2AAD0430012 1A2A24162101901	B						ADD
		A	3MDL4XLB460	CARTON LABEL (BLANK,88*22mm)	1		18030	
4	1A2A2123Y101900 1A2A2123Y101901 1A1A24232101900 1A50190002 2AAD0430012	B						
		A	3MDL4XLB470	CARTON LABEL (68*113,BLANK,WHITE)	1		5918	ADD
5	1A50190002	B						ADD
		A	3MDL4XLB580	LABEL (WHITE, 45*15mm*R1,BLANK)	2		12839	
6	1A50190002	B						ADD
		A	3MDL4XLB590	LABEL (68*23.5*R1.25,BLANK,WHITE)	1		536	
7	1A2A24162101901	B						ADD
		A	3MDL4XLB870	CARTON LABEL (75*50mm,BLANK)	1		9232	
8	2AAD506R227 ~~2AAD506S003~~ 2AAD557R127 2AAD043R027 2AAD473R027 2AAD473S001 2AAD0430012 1A2A24162101901	B						ADD
		A	3MDLX9LB030	CONTROL BOX LABEL(#12*10mm,BLANK)	1		34076	
9	2AAD254R027 2AAD475R027 2AAD503R027 2AAD503R127 2AAD503R227	B						ADD
		A						
		B	3MDLX9LB030	CONTROL BOX LABEL(#12*10mm,BLANK)	2		34076	
		A						

ECR (Engineering Change Request)

Engineering Change Assessment Item List 工程變更評估項目清單			
Document	Confirm	Authorized Dept.	Remark
1. Application for Revision of Specification or Drawing(s) for delivery 是否有修改交貨的規格或圖面	☐Yes ☑No need	RD	
2. Standards or Regulatories Impact 是否有評估適用之標準或主管機關之相關法規的申請	☐Yes ☑No need	DQE	沒影响
3. Change point of PCB mounting PCBA插件位置是否變更	☐Yes ☑No need	RD	
4. PCBA Process Changes PCBA製程是否變更	☐Yes (Continue checking below) ☑No	PE	無影响
4-1) Change of Reflow temperature 迴焊溫度是否變更	☐Yes ☐No need		
4-2) Change of bonding temperature 膠合溫度是否變更	☐Yes ☐No need		
4-3) Change of Manual Soldering temperature 人工手焊工具之溫度是否變更	☐Yes ☐No need		
4-4) Change of storage condition after protection humidity package 防潮包裝完成後的儲存條件是否變更	☐Yes ☐No need		
5. Reliability test report (Test result and data) 是否有可靠性測試報告（測試結果及數據）	☐Yes ☑No need	DQE	沒影响
6. Process FMEA（Medical only） 是否有進行製程失效模式與效應分析	☐Yes ☑No need	PE	無影响
7. Design FMEA（Medical only） 是否有進行設計失效模式與效應分析	☐Yes ☑No need	RD	
8. Risk Management（Medical only） 是否有進行風險管理評估	☐Yes ☑No need	RD	
9. Change points due to the modification 是否此修改會延伸導致其他變更點	☐Yes ☑No need	RD	

ECR (Engineering Change Request)

Engineering Change Assessment Item List
工程變更評估項目清單

Document	Confirm	Authorized Dept.	Remark
10. Initial Supply Control implements plan or result. 是否有實施供料控制評估	☑Yes ☐No need	PMC	
10-1) Confirm the work order or order number or date for the implementation start of the engineering change. 確認工程變更開始實施之工單或訂單號碼或日期。	☑Yes ☐No need		工單2005727, 9102163 已更新 LABEL 用量.
10-2) Coordinate the handling methods for related products and materials. 協調相關產品及材料處理方法。	☑Yes ☐No need		
10-3) Arrange the production schedule. 處理生產日程之安排。	☑Yes ☐No need		
10-4) Control the changed materials. 變更材料之管制。	☐Yes ☑No need		
10-5) Establish relevant execution control records for EC materials, register traceability data for each material. 建立有關工程變更物料之相關執行管控記錄、登錄各項物料追溯性資料。	☑Yes ☐No need		系統管控.
11. Training Requirement 若此一變更影響製程或檢驗，是否需要再做人員訓練	☐Yes ☑No need	PE	無影响
12. Modification contents (For example, the following documents) 是否有評估此變更之各項相關文件（如下） ☐ MDF ☐ DMR ☐ SOP ☐ SIP ☐ QC control plan ☐ Approval Sheet ☐ Engineering Spec ☐ Others	☐Yes ☑No need	QA	SOP無影响

DIVA Labs.

Supplier Change Request (SCR)

Proposed Change： ☐1. Design modification 設計修改 ■2. Material change 材料變更 ☐3. Manufacturer change 製造商變更 ☐4. Factory change 工廠變更 ☐5. Process sequency change 工序變更 ☐6. Equipment / Tooling change 設備/ 模具變更 ☐7. Process / Method / Condition change 加工流程/方法/條件變更 ☐8.Add second source 新增替代料 ■9. Others 其他：_____內容無變動_____	**Change No：** EC25120703 **Date：** 20260114
Reason for Change：	MEE系列_ 空白原物料增加和變動，執行3MD4XLB570換成3MD4XLB460等 Adding and changing blank raw materials
Model / Part No.：	1A40190007 AD-BOARD11-2 ，1A40190008 AD-BOARD12，1A40190009 AD-BOARD12-2，1A40190010 AD-BOARD12-3 1A40190011 AD-BOARD13，1A2A2123Y101900 TSD-PT212-CB，1A2A2123Y101901 TSD-PT212-CW，1A1A24232101900 TSD-PT243-CW-2CT，1A50190002 TSD-TS1-W，1A2A24162101900 TSD-PT241W-AHN，1A2A24162101901 TSD-PT241W-1AH
Implementation Type：	☐1. Immediately Change 立即切換 ■2. Running Change 自然切換 ☐3. Other 其他：_____

Material Change Description（Please add pages as needed if the provided space is insufficient.）
物料變更說明（如不敷使用請逕行增頁）

No.	Subassembly		Part No.	Description	Q'ty	Location	Stock	Remark
1	2AAD2540012 1A40190008 1A40190009 1A40190010 1A40190011	B	3MDL4XLB570	CARTON LABEL (WHITE,90*72mm,BLANK)	0.025			
		A	3MDL4XLB460	CARTON LABEL (BLANK,88*22mm)	0.025			Change
2	1A2A2123Y101900 1A2A2123Y101901	B	3MDL4XLB570	CARTON LABEL (WHITE,90*72mm,BLANK)	2			
		A	3MDL4XLB460	CARTON LABEL (BLANK,88*22mm)	2			Change

Comments

DIVA Representative			Customer Approval
Engineering	**PM**	**Sales**	
Kelly 0114 1200	Amber 0114 1510	Oli 0114 1620	如附件 Momo 0209 1315

Supplier Change Request (SCR)

Material Change Description (Please add pagesor row as needed if the provided space is insufficient.)
物料變更說明（如不敷使用請逕行增頁或增列）

No.	Subassembly	Part No.		Description	Q'ty	Location	Stock	Remark
3	1A1A24232101900 1A50190002 2AAD0430012 1A2A24162101901	B	3MDL4XLB570	CARTON LABEL (WHITE,90*72mm,BLANK)	1			
		A	3MDL4XLB460	CARTON LABEL (BLANK,88*22mm)	1			Change

DIVA Labs.

Supplier Change Request (SCR)

Proposed Change： ☐1. Design modification 設計修改 ■2. Material change 材料變更 ☐3. Manufacturer change 製造商變更 ☐4. Factory change 工廠變更 ☐5. Process sequency change 工序變更 ☐6. Equipment / Tooling change 設備/模具變更 ☐7. Process / Method / Condition change 加工流程/方法/條件變更 ☐8.Add second source 新增替代料 ■9. Others 其他：_____內容無變動_____	**Change No：** EC25120703
	Date： 20260114
Reason for Change： MEE系列_空白原物料增加和變動，執行3MD4XLB570換成3MD4XLB460等 Adding and changing blank raw materials	
Model / Part No.： 1A40190007 AD-BOARD11-2 ，1A40190008 AD-BOARD12，1A40190009 AD-BOARD12-2，1A40190010 AD-BOARD12-3 1A40190011 AD-BOARD13，1A2A2123Y101900 TSD-PT212-CB，1A2A2123Y101901 TSD-PT212-CW，1A1A24232101900 TSD-PT243-CW-2CT，1A50190002 TSD-TS1-W，1A2A24162101900 TSD-PT241W-AHN，1A2A24162101901 TSD-PT241W-1AH	
Implementation Type： ☐1. Immediately Change 立即切換 ■2. Running Change 自然切換 ☐3. Other 其他：_____	

Material Change Description（Please add pages as needed if the provided space is insufficient.）
物料變更說明（如不敷使用請逕行增頁）

No.	Subassembly		Part No.	Description	Q'ty	Location	Stock	Remark
1	2AAD2540012 1A40190008 1A40190009 1A40190010 1A40190011	B	3MDL4XLB570	CARTON LABEL (WHITE,90*72mm,BLANK)	0.025			
		A	3MDL4XLB460	CARTON LABEL (BLANK,88*22mm)	0.025			Change
2	1A2A2123Y101900 1A2A2123Y101901	B	3MDL4XLB570	CARTON LABEL (WHITE,90*72mm,BLANK)	2			
		A	3MDL4XLB460	CARTON LABEL (BLANK,88*22mm)	2			Change

Comments

DIVA Representative			Customer Approval
Engineering	**PM**	**Sales**	
Kelly 0114 1200	Amber 0114 1510	Oli 0114 1630	MEE タッチTL '26.01.29 阿野

三菱電機エンジニアリング株式会社　長崎事業所

業務部　資材課　課長　殿

納入品仕様変更届・許可申請書

申請元会社名	DIVA	発行年月日	2026/01/27
申請部署名	Sales	申請元管理番号	EC25120703
申請元 責任者氏名	Oliver Chen	品目コード	
件名	外箱ラベル用ブランクラベル変更		
機種・ 部品名等	AD-BOARD11-2 / AD-BOARD12 / AD-BOARD12-2 / AD-BOARD12-3 /AD-BOARD13 / TSD-PT212-CB / TSD-PT212-CW / TSD-PT243-CW-2CT /TSD-TS1-W / TSD-	型式・ 部品番号等	
変更内容	・Change the blank label from 3MDL4XLB570 (80*72mm) to 3MDL4XLB460 (88*22mm)	設計変更 / 材料変更 / 図面変更 工程変更 / 設備変更 / 工作方法変更 その他 ○ / 購入品変更	
変更理由	Unified the blank label in different models.	導入希望 年月（日）	Running Change
関連技術文書	添付資料	詳細説明資料・ エビデンス添付	有

－　三菱電機エンジニアリング㈱ 使用欄　－

①資材課長	②品証課長	③設計担当	④設計課長	⑤品管課長	⑥品証課長
2026/01/28 資材課 与田	2026/01/28 品証課 櫻井	2026/01/29　ﾀｯﾁ課 阿野	2026/01/29　ﾀｯﾁ課 戸北	2026/01/29　品管二 田中	2026/02/04 品証課 櫻井

諾否理由・根拠等（品管記入）	変更承諾 可否
他機種で使用実績のある外箱ラベルへの変更で問題ありません。（品管二）	可

（ＭＥＥ長規８１７４・８－１）

物料類	LV	母件	母件物料說明	子件	子件物料說明	元件數	安裝點	客戶	客戶簡稱	母件EO	EOL生效日	排除1	客戶排除	內銷-業務代表	外銷-業務代表
M	1	1A1A24232101900	TSD-PT243-CW-2CT	8MD557LB120	CARTON LABEL (TSD-PT243-CW-2CT)	1		10019	台灣三菱MEE			☐		Sophie Lee 李毓潔	Sophie Lee 李毓潔
M	2	1A1A32162101900	TSD-PT321W-S	8MD351LB020	CARTON LABEL (TSD-PT321W-S)	1		10019	台灣三菱MEE			☐		Sophie Lee 李毓潔	Sophie Lee 李毓潔
M	1	1A2A2123Y101900	TSD-PT212-CB	8MD506LB020	CARTON LABEL (TSD-PT212-CB & CW)	1		10019	台灣三菱MEE			☐		Sophie Lee 李毓潔	Sophie Lee 李毓潔
M	1	1A2A2123Y101901	TSD-PT212-CW	8MD506LB020	CARTON LABEL (TSD-PT212-CB & CW)	1		10019	台灣三菱MEE			☐		Sophie Lee 李毓潔	Sophie Lee 李毓潔
M	2	1A2A24162101900	TSD-PT241W-AHN	8MD043LB02S	C/L PRINTING (TSD-PT241W-AHN)	1		10019	台灣三菱MEE			☒	10087	Sophie Lee 李毓潔	Sophie Lee 李毓潔
M	1	1A2A24162101901	TSD-PT241W-1AH	8MD473LB020	CARTON LABEL (TSD-PT241W-1AH)	1		10019	台灣三菱MEE			☒	10087	Sophie Lee 李毓潔	Sophie Lee 李毓潔
M	2	1A2A32162301900	TSD-PT321W-1AH	8MD264LB030	CARTON LABEL (TSD-PT321W-1AH)	1		10019	台灣三菱MEE			☒	10087	Sophie Lee 李毓潔	Sophie Lee 李毓潔
M	2	1A40190007	AD-BOARD11-2	8MD254LB010	CARTON LABEL (AD-BOARD11-2)	0.025		10019	台灣三菱MEE			☐		Sophie Lee 李毓潔	Sophie Lee 李毓潔
M	1	1A40190008	AD-BOARD12	8MD475LB010	CARTON LABEL (AD-BOARD12)	0.025		10019	台灣三菱MEE			☒	10087	Sophie Lee 李毓潔	Sophie Lee 李毓潔
M	1	1A40190009	AD-BOARD12-2	8MD503LB010	CARTON LABEL (AD BOARD 12-2)	0.025		10019	台灣三菱MEE			☒	10087	Sophie Lee 李毓潔	Sophie Lee 李毓潔
M	1	1A40190010	AD-BOARD12-3	8MD503LB110	CARTON LABEL (AD-BOARD12-3)	0.025		10019	台灣三菱MEE			☐		Sophie Lee 李毓潔	Sophie Lee 李毓潔
M	1	1A40190011	AD-BOARD13	8MD503LB210	CARTON LABEL (AD-BOARD13)	0.025		10019	台灣三菱MEE			☐		Sophie Lee 李毓潔	Sophie Lee 李毓潔
M	1	1A50190001	TSD-TS1-B	8MD529LB020	CARTON LABEL (TSD-TS1-B)	1		10019	台灣三菱MEE			☐		Sophie Lee 李毓潔	Sophie Lee 李毓潔
M	1	1A50190002	TSD-TS1-W	8MD528LB020	CARTON LABEL (TSD-TS1-W)	1		10019	台灣三菱MEE			☐		Sophie Lee 李毓潔	Sophie Lee 李毓潔
M	1	2AAD0430012	PACKING (TSD-PT241W-AHN)	8MD043LB02S	C/L PRINTING (TSD-PT241W-AHN)	1						☐			
E	1	2AAD0430012	PACKING (TSD-PT241W-AHN)	8MD043LB02S	C/L PRINTING (TSD-PT241W-AHN)	1						☐			
M	1	2AAD2540012	PCBA PACKING (AD-BOARD11-2)	8MD254LB010	CARTON LABEL (AD-BOARD11-2)	0.025						☐			
M	1	2AAD2640012	PACKING (TSD-PT321W-1AH)	8MD264LB030	CARTON LABEL (TSD-PT321W-1AH)	1						☐			
M	1	2AAD3510012	PACKING (TSD-PT321W-S)	8MD351LB020	CARTON LABEL (TSD-PT321W-S)	1						☐			
M	1	2AAD3600012	PACKING (TSD-AT1520-CB)	8MD360LB020	CARTON LABEL (TSD-AT1520-CB)	1						☐			
M	1	2AAD3870012	PACKING (TSD-AT1520-CW)	8MD360LB020	CARTON LABEL (TSD-AT1520-CB)	1						☐			

REV.	DATE	DESCRIPTION	BY	ARRD

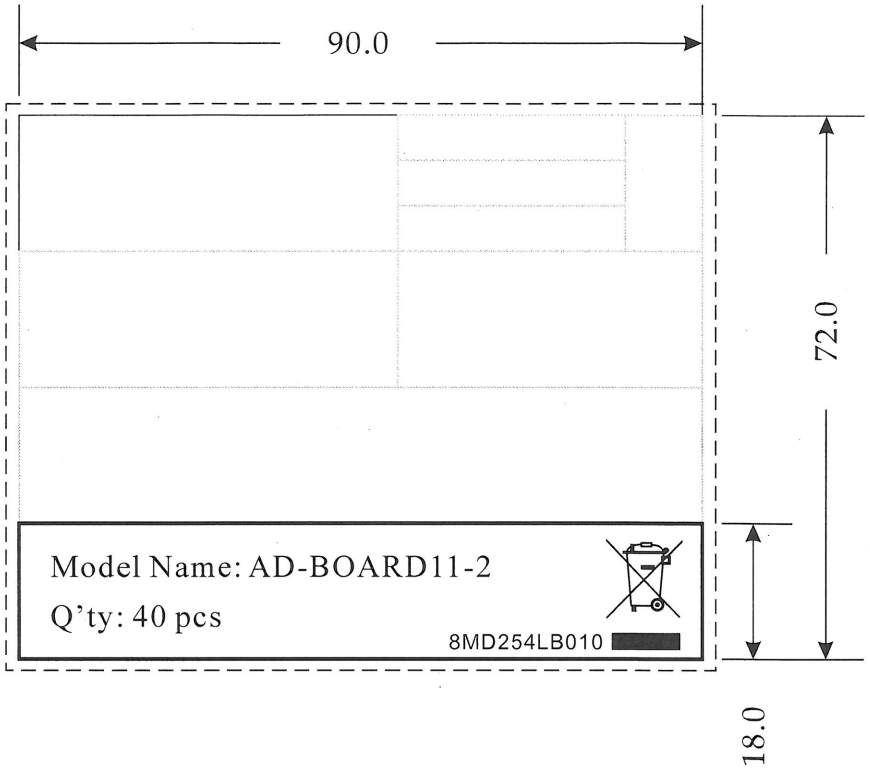

Note:
1.Use 3MDL4XLB570 Blank label.
2.Use Ricoh #B110A ribbon.

SALES	THIRD ANGLE PROJECTION	UNITS: mm	SCALE: 1/1	SHEET: 1/1	MODEL NO.:AD-Board11-2
		MATERIAL: SEE NOTES		TREATMENT: SEE NOTES	
PE / PCD	DSGD by JANE	2016/03/17	PART NAME: CARTON LABEL		
	APPD by		PART NO.: 8MD254LB010		VER.0
	APPD NO.:	FILE NAME: AD-Board11-2.cdr	DIVA Laboratories,Ltd.		

REV.	DATE	DESCRIPTION	BY	APVD
0	2025/11/21	料號內容不變動，變更空白料號為3MDL4XLB460	killy	

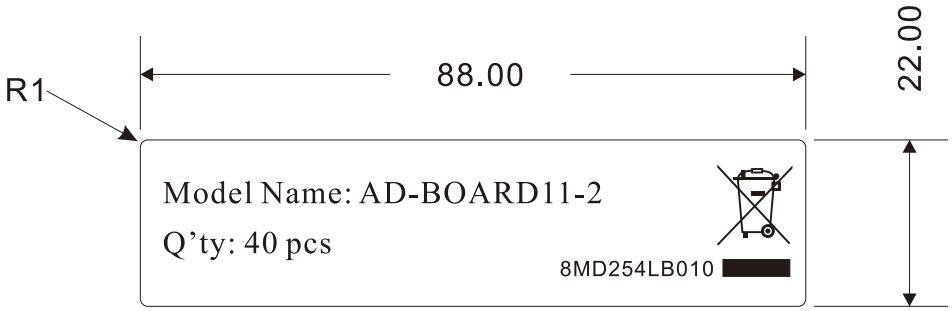

Notes:
1.Use 3MDL4XLB460 Blank label.
PEARLY PP SYNTHETIC PAPER(PP珠光合成紙)
Color:White
2.Use Ricoh #B110A ribbon.

PM/ SALES		THIRD ANGLE PROJECTION	UNITS: mm	SCALE: 1/1	SHEET: 1/1	MODEL NO.:AD-Board11-2
Amber 1222 1140	Olin 1222 1430		MATERIAL: SEE NOTES		TREATMENT: SEE NOTES	
PE	PCD	DSGD by killy	2025/11/21	PART NAME: CARTON LABEL		
Nick_Lin 1222 1840	Joanne 1224 1955	APPD by		PART NO.: 8MD254LB010		VER.0
		APPD NO.:	FILE NAME: AD-Board11-2.cdr	DIVA Laboratories,Ltd.		

REV.	DATE	DESCRIPTION	BY	APVD

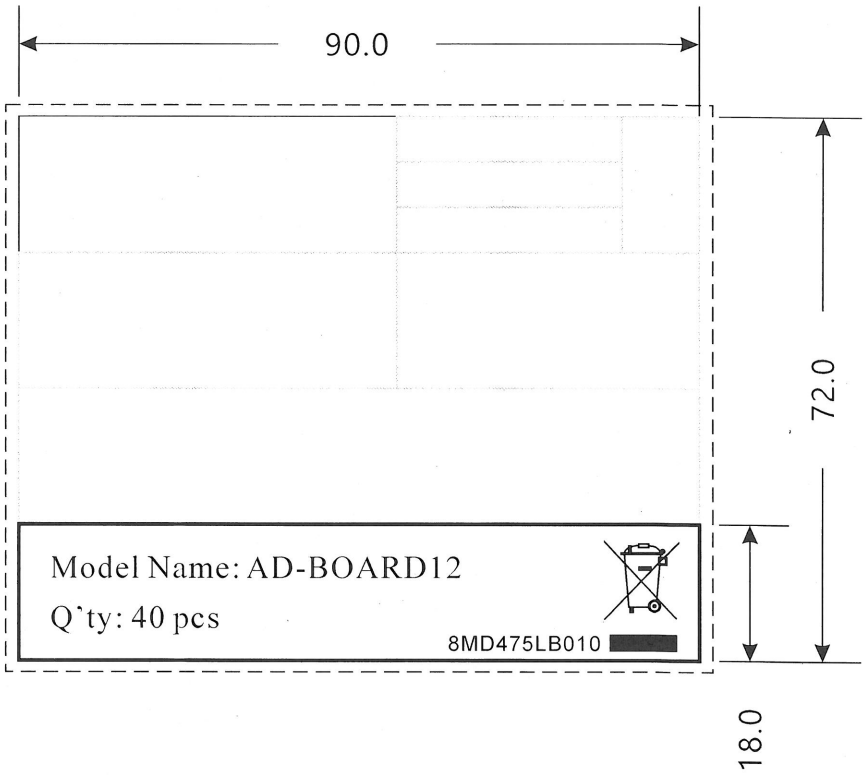

Note:
1.Use 3MDL4XLB570 Blank label.
2.Use Ricoh #B110A ribbon.

PM / ~~SALES~~		THIRD ANGLE PROJECTION	UNITS: mm	SCALE: 1/1	SHEET: 1/1	MODEL NO.: AD-BOARD12
			MATERIAL: SEE NOTES		TREATMENT: SEE NOTES	
PE	PCD	DSGD by JANE	2019/07/30	PART NAME: CARTON LABEL		
		APVD by		PART NO.: 8MD475LB010		VER.0
		APVD NO.:	FILE NAME: AD-BOARD12.cdr	DIVA Laboratories, Ltd.		

REV.	DATE	DESCRIPTION	BY	APVD
0	2025/11/25	料號內容不變動，變更空白料號為3MDL4XLB460	Lyn	

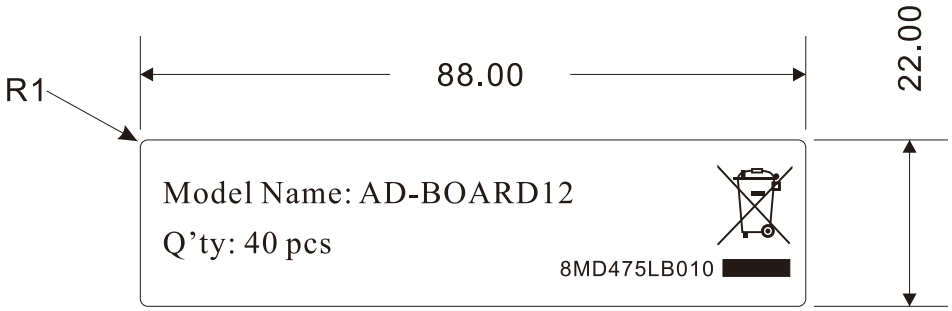

Notes:
1.Use 3MDL4XLB460 Blank label.
PEARLY PP SYNTHETIC PAPER(PP珠光合成紙)
Color:White
2.Use Ricoh #B110A ribbon.

PM / SALES	THIRD ANGLE PROJECTION	UNITS: mm	SCALE: 1/1	SHEET: 1/1	MODEL NO.: AD-BOARD12
Amber 1222 1140		MATERIAL: SEE NOTES		TREATMENT: SEE NOTES	
1222 1430	DSGD by Lyn	2025/11/25	PART NAME: CARTON LABEL		
PE / PCD	APVD by		PART NO.: 8MD475LB010		VER.0
Nick_Lin 1222 1840 / Joanne 1224 1955	APVD NO.:	FILE NAME: AD-BOARD12.cdr	DIVA Laboratories, Ltd.		

REV.	DATE	DESCRIPTION	BY	APVD

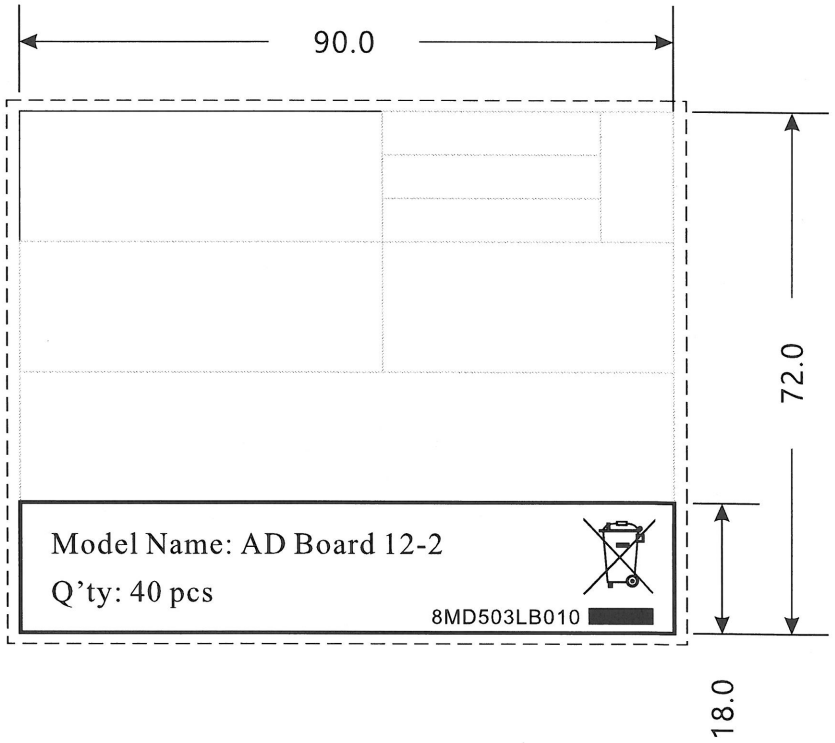

Note:
1.Use 3MDL4XLB570 Blank label.
2.Use Ricoh #B110A ribbon.

PM / SALES	PE	PCD

THIRD ANGLE PROJECTION	UNITS: mm	SCALE: 1/1	SHEET: 1/1	MODEL NO.: AD Board 12-2	
	MATERIAL: SEE NOTES		TREATMENT: SEE NOTES		
DSGD by ALICIA	2019/12/25	PART NAME: CARTON LABEL			
APVD by		PART NO.: 8MD503LB010		VER.0	
APVD NO.:	FILE NAME: AD Board 12-2.cdr	DIVA Laboratories, Ltd.			

REV.	DATE	DESCRIPTION	BY	APVD
0	2025/11/25	料號內容不變動，變更空白料號為3MDL4XLB460	Lyn	

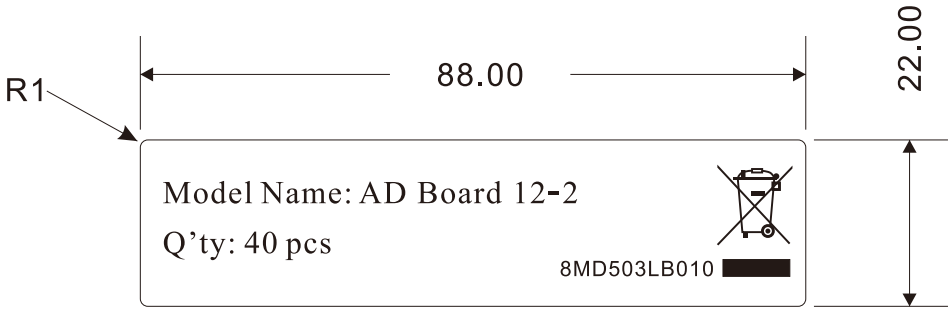

Notes:
1.Use 3MDL4XLB460 Blank label.
PEARLY PP SYNTHETIC PAPER(PP珠光合成紙)
Color:White
2.Use Ricoh #B110A ribbon.

PM / SALES		THIRD ANGLE PROJECTION	UNITS: mm	SCALE: 1/1	SHEET: 1/1	MODEL NO.: AD Board 12-2
Amber 1222 1140	1222 1425		MATERIAL: SEE NOTES		TREATMENT: SEE NOTES	
PE	PCD	DSGD by Lyn	2025/11/25	PART NAME: CARTON LABEL		
Nick_Lin 1222 1840	Joanne 1224 1955	APVD by		PART NO.: 8MD503LB010		VER.0
		APVD NO.:	FILE NAME: AD Board 12-2.cdr	DIVA Laboratories, Ltd.		

REV.	DATE	DESCRIPTION	BY	APVD

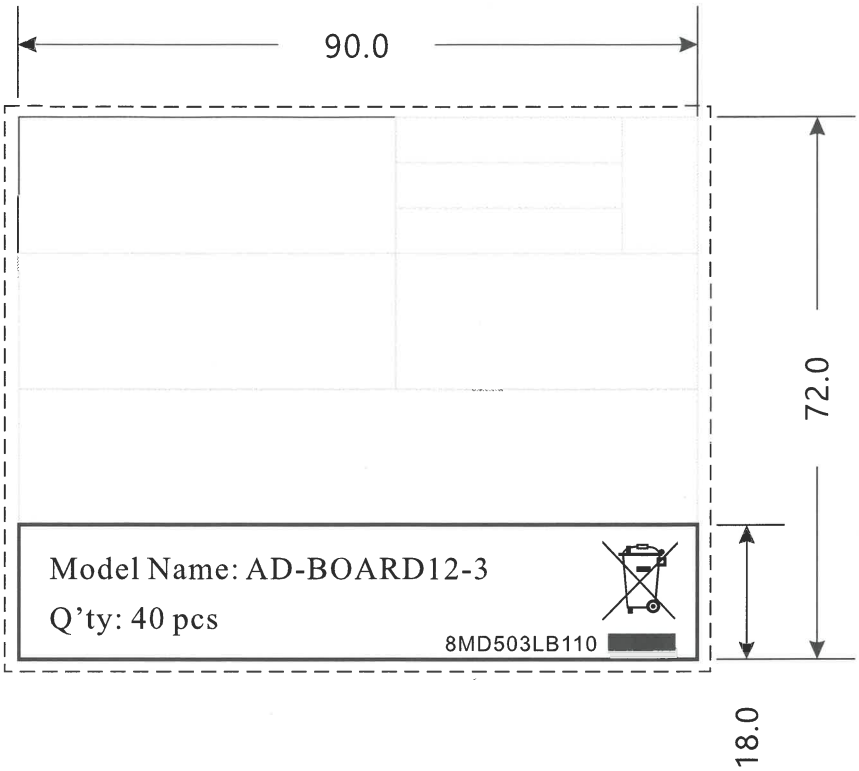

Note:
1.Use 3MDL4XLB570 Blank label.
2.Use Ricoh #B110A ribbon.

PM / SALES	PE	PCD
0809 1430	林益銓	Joanne 0809 1800

THIRD ANGLE PROJECTION	UNITS: mm	SCALE: 1/1	SHEET: 1/1	MODEL NO.: AD-BOARD12-3	
	MATERIAL: SEE NOTES		TREATMENT: SEE NOTES		
DSGD by Albert	2021/8/9	PART NAME: CARTON LABEL			
APVD by		PART NO.: 8MD503LB110		VER.0	
APVD NO.:	FILE NAME: AD-BOARD12-3.cdr	DIVA Laboratories, Ltd.			

REV.	DATE	DESCRIPTION	BY	APVD
0	2025/11/25	料號內容不變動，變更空白料號為3MDL4XLB460	Lyn	

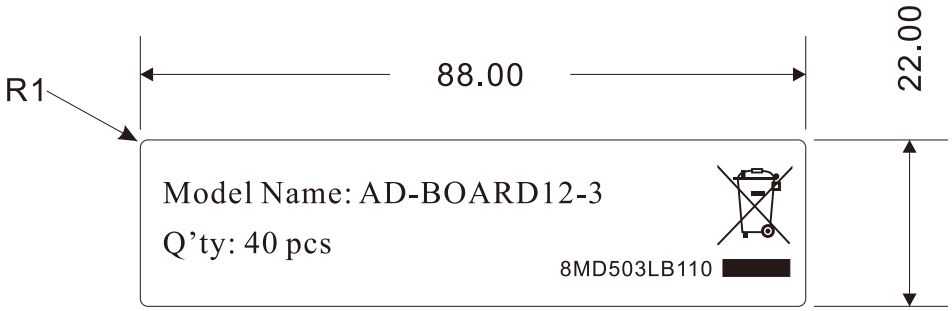

Notes:
1.Use 3MDL4XLB460 Blank label.
PEARLY PP SYNTHETIC PAPER(PP珠光合成紙)
Color:White
2.Use Ricoh #B110A ribbon.

PM / SALES		THIRD ANGLE PROJECTION	UNITS: mm	SCALE: 1/1	SHEET: 1/1	MODEL NO.: AD-BOARD12-3
Amber 1222 1140	Olivia 1222 1430		MATERIAL: SEE NOTES		TREATMENT: SEE NOTES	
PE	PCD	DSGD by Lyn	2025/11/25	PART NAME: CARTON LABEL		
Nick_Lin 1222 1840	Joanne 1224 1955	APVD by		PART NO.: 8MD503LB110		VER.0
		APVD NO.:	FILE NAME: AD-BOARD12-3.cdr	DIVA Laboratories, Ltd.		

REV.	DATE	DESCRIPTION	BY	APVD

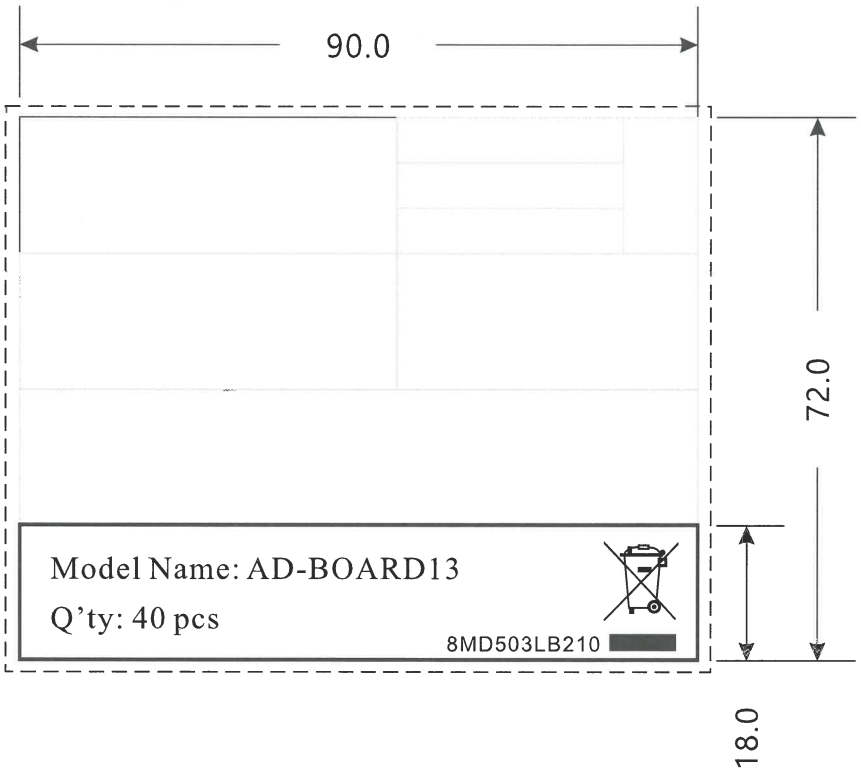

Note:
1.Use 3MDL4XLB570 Blank label.
2.Use Ricoh #B110A ribbon.

PM / SALES		THIRD ANGLE PROJECTION	UNITS: mm	SCALE: 1/1	SHEET: 1/1	MODEL NO.: AD-BOARD13
Kate 1130 1325	Jaifen 1130 1340		MATERIAL: SEE NOTES		TREATMENT: SEE NOTES	
PE	PCD	DSGD by Albert	2021/9/24	PART NAME: CARTON LABEL		
林益銓 1130 1415	Jaifen 1130 1425	APVD by		PART NO.: 8MD503LB210		VER.0
		APVD NO.:	FILE NAME: AD-BOARD13.cdr	DIVA Laboratories, Ltd.		

REV.	DATE	DESCRIPTION	BY	APVD
0	2025/11/25	料號內容不變動，變更空白料號為3MDL4XLB460	Lyn	

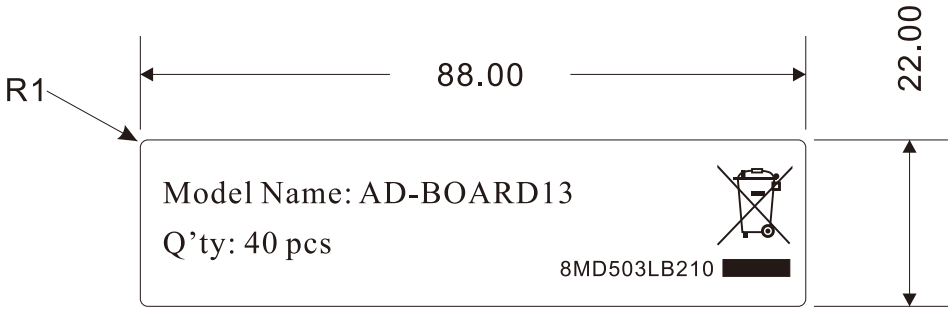

Notes:
1.Use 3MDL4XLB460 Blank label.
PEARLY PP SYNTHETIC PAPER(PP珠光合成紙)
Color:White
2.Use Ricoh #B110A ribbon.

PM / SALES		THIRD ANGLE PROJECTION	UNITS: mm	SCALE: 1/1	SHEET: 1/1	MODEL NO.: AD-BOARD13
Amber 1222 1140	Olin 1222 1430		MATERIAL: SEE NOTES		TREATMENT: SEE NOTES	
PE	PCD	DSGD by Lyn	2025/11/25	PART NAME: CARTON LABEL		
Nick_Lin 1222 1840	Joanne 1224 1955	APVD by		PART NO.: 8MD503LB210		VER.0
		APVD NO.:	FILE NAME: AD-BOARD13.cdr	DIVA Laboratories, Ltd.		

REV.	DATE	DESCRIPTION	BY	APVD

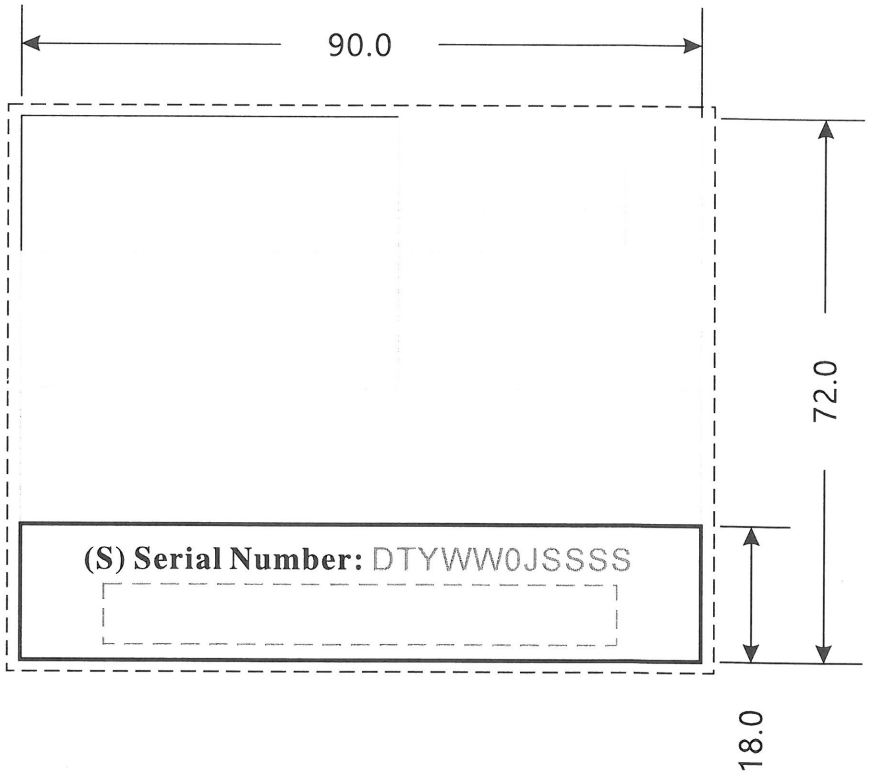

Note:
1.Use 3MDL4XLB570 Blank label.
2.Use Ricoh #B110A ribbon.

PM / SALES		THIRD ANGLE PROJECTION	UNITS: mm	SCALE: 1/1	SHEET: 1/1	MODEL NO.: TSD-PT212-CB TSD-PT212-CW
			MATERIAL: SEE NOTES		TREATMENT: SEE NOTES	
PE	PCD	DSGD by JANE	2019/05/06	PART NAME: CARTON LABEL		
		APVD by		PART NO.: 8MD506LB020		VER.0
		APVD NO.:	FILE NAME: TSD-PT212-CB.cdr	DIVA Laboratories, Ltd.		

REV.	DATE	DESCRIPTION	BY	APVD
0	2025/11/25	原尺寸18X90mm變更成22x88mm更改空白貼紙料號， 資訊料號不進階	Lyn	

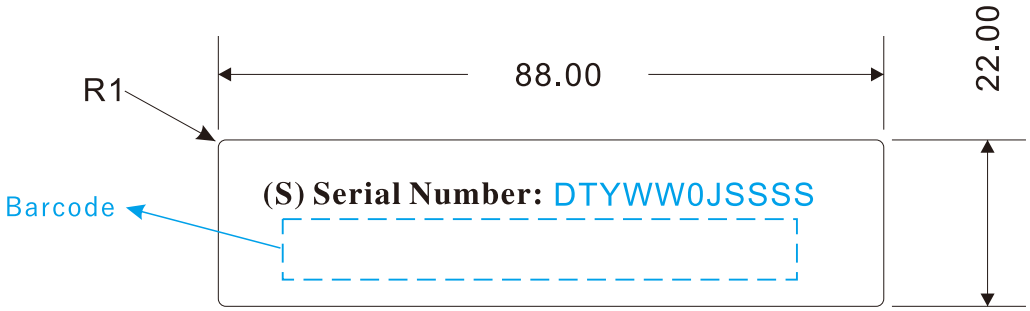

Notes:
1.Use 3MDL4XLB460 Blank label.
PEARLY PP SYNTHETIC PAPER(PP珠光合成紙)
Color:White
2.Use Ricoh #B110A ribbon.

PM / SALES		THIRD ANGLE PROJECTION	UNITS: mm	SCALE: 1/1	SHEET: 1/1	MODEL NO.: TSD-PT212-CB TSD-PT212-CW
Amber 1222 1140	1222 1430		MATERIAL: SEE NOTES		TREATMENT: SEE NOTES	
PE	PCD	DSGD by Lyn	2025/11/25	PART NAME: CARTON LABEL		
Nick_Lin 1222 1840	Joanne 1224 1955	APVD by		PART NO.: 8MD506LB020		VER.0
		APVD NO.:	FILE NAME: TSD-PT212-CB.cdr	DIVA Laboratories, Ltd.		

REV.	DATE	DESCRIPTION	BY	APVD

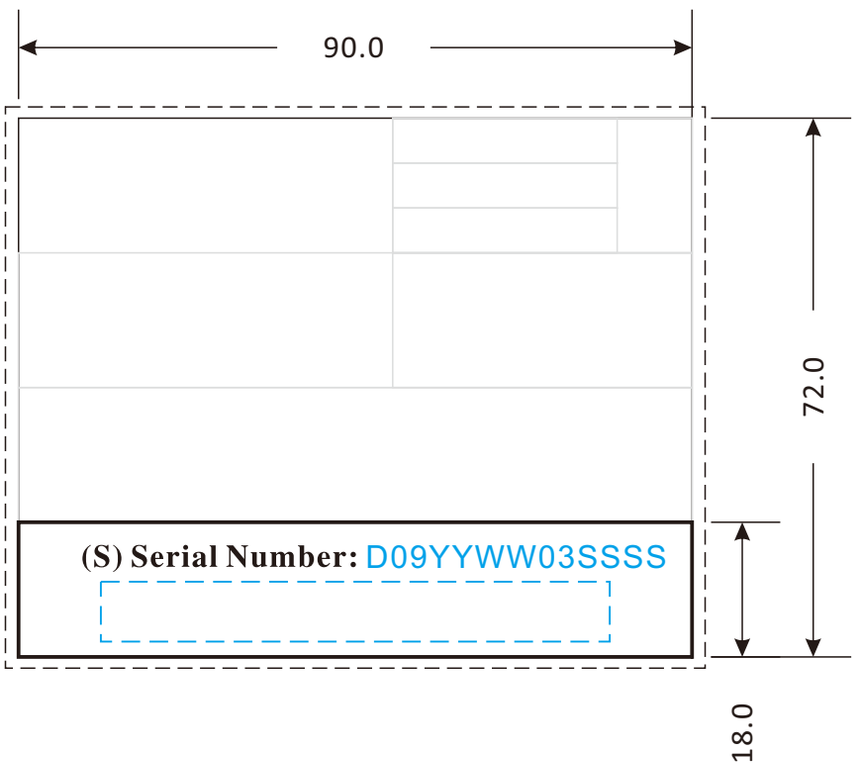

Note:
Use Ricoh #B110A ribbon.

PM / SALES		THIRD ANGLE PROJECTION	UNITS: mm	SCALE: 1/1	SHEET: 1/1	MODEL NO.: TSD-PT243-CW-2CT
Shinichi 1208 1730	Jennifer 1208 1540		MATERIAL: SEE NOTES		TREATMENT: SEE NOTES	
PE	PCD	DSGD by ALICIA	2023/11/30	PART NAME: CARTON LABEL		
NICK 1212 1425	Joanne 1213 1045	APVD by		PART NO.: 8MD557LB120		VER.0
		APVD NO.:	FILE NAME: TSD-PT243-CW-2CT.cdr	DIVA Laboratories,Ltd.		

REV.	DATE	DESCRIPTION	BY	APVD
0	20251126	原尺寸18X90mm變更成22x88mm更改空白貼紙料號， 資訊料號不進階	killy	

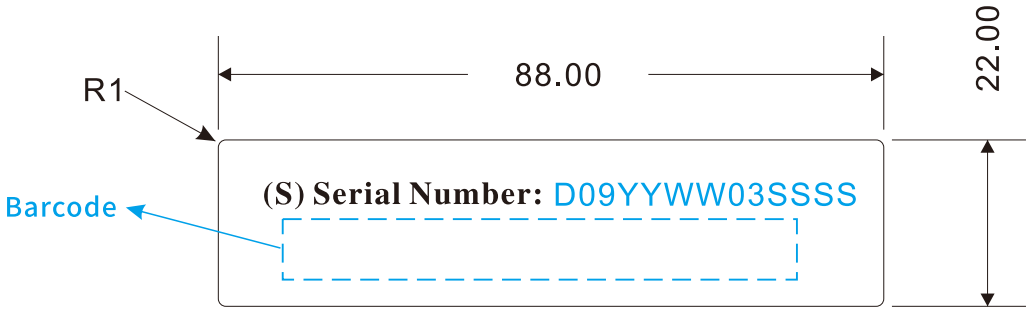

Notes:
1.Use 3MDL4XLB460 Blank label.
PEARLY PP SYNTHETIC PAPER(PP珠光合成紙)
Color:White
2.Use Ricoh #B110A ribbon.

PM / SALES		THIRD ANGLE PROJECTION	UNITS: mm	SCALE: 1/1	SHEET: 1/1	MODEL NO.:TSD-PT243-CW-2CT
Amber 1222 1140	Olin 1222 1430		MATERIAL: SEE NOTES		TREATMENT: SEE NOTES	
PE	PCD	DSGD by Killy	2025/11/26	PART NAME: CARTON LABEL		
Nick_Lin 1226 1655	Joanne 1229 1015	APVD by		PART NO.: 8MD557LB120		VER.0
		APVD NO.:	FILE NAME: TSD-PT243-CW-2CT.cdr	DIVA Laboratories,Ltd.		

REV.	DATE	DESCRIPTION	BY	APVD

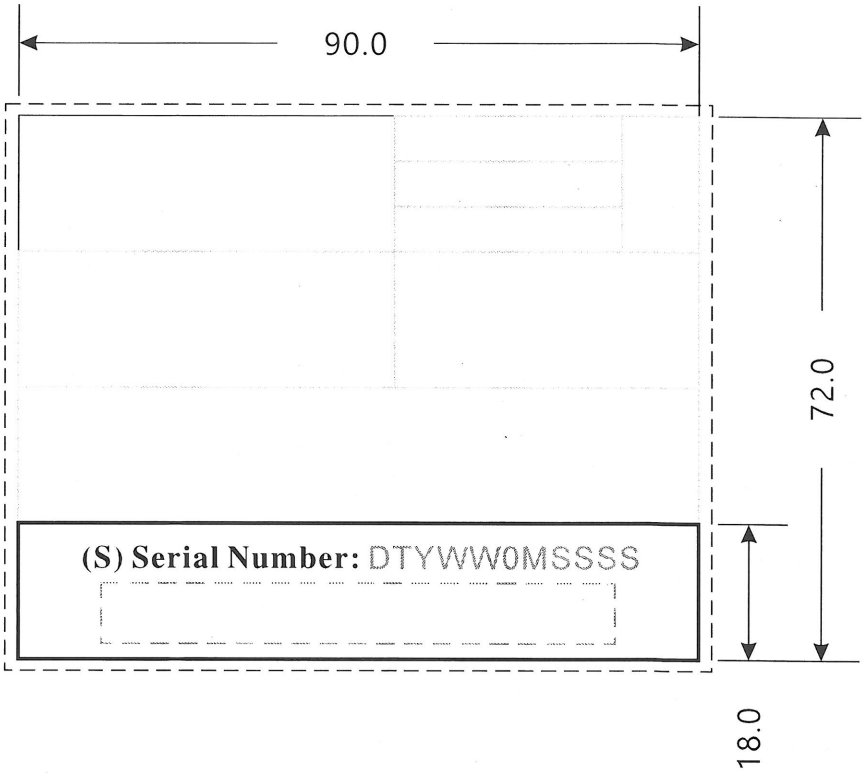

Note:
1.Use 3MDL4XLB570 Blank label.
2.Use Ricoh #B110A ribbon.

PM / SALES	THIRD ANGLE PROJECTION	UNITS: mm	SCALE: 1/1	SHEET: 1/1	MODEL NO.:TSD-TS1-W
		MATERIAL: SEE NOTES		TREATMENT: SEE NOTES	
PE / PCD	DSGD by JANE	2019/06/25	PART NAME: CARTON LABEL		
	APVD by		PART NO.: 8MD528LB020		VER.0
	APVD NO.:	FILE NAME: TSD-TS1-W.cdr	DIVA Laboratories, Ltd.		

REV.	DATE	DESCRIPTION	BY	APVD
0	2025/11/25	原尺寸18X90mm變更成22x88mm更改空白貼紙料號， 資訊料號不進階	Lyn	

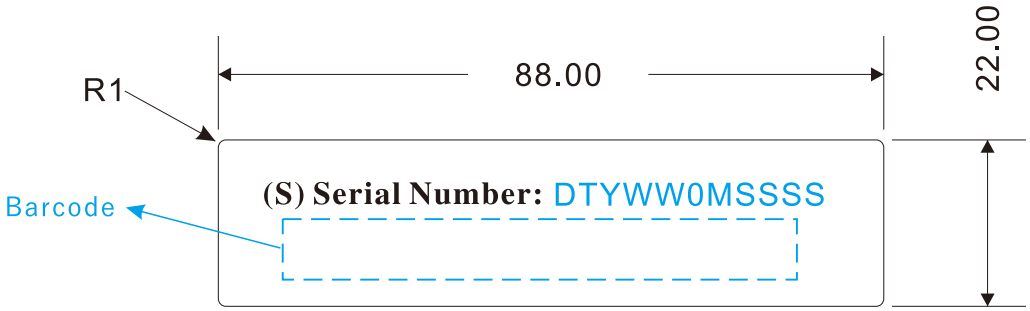

Notes:
1.Use 3MDL4XLB460 Blank label.
PEARLY PP SYNTHETIC PAPER(PP珠光合成紙)
Color:White
2.Use Ricoh #B110A ribbon.

PM / SALES		THIRD ANGLE PROJECTION	UNITS: mm	SCALE: 1/1	SHEET: 1/1	MODEL NO.:TSD-TS1-W
Amber 1222 1140	Olin 1222 1420		MATERIAL: SEE NOTES		TREATMENT: SEE NOTES	
PE	PCD	DSGD by Lyn	2025/11/25	PART NAME: CARTON LABEL		
Nick_Lin 1222 1750	Joanne 1224 1955	APVD by		PART NO.: 8MD528LB020		VER.0
		APVD NO.:	FILE NAME: TSD-TS1-W.cdr	DIVA Laboratories, Ltd.		

REV.	DATE	DESCRIPTION	BY	ARRD
1	20140127	Change carton label size	JANE	

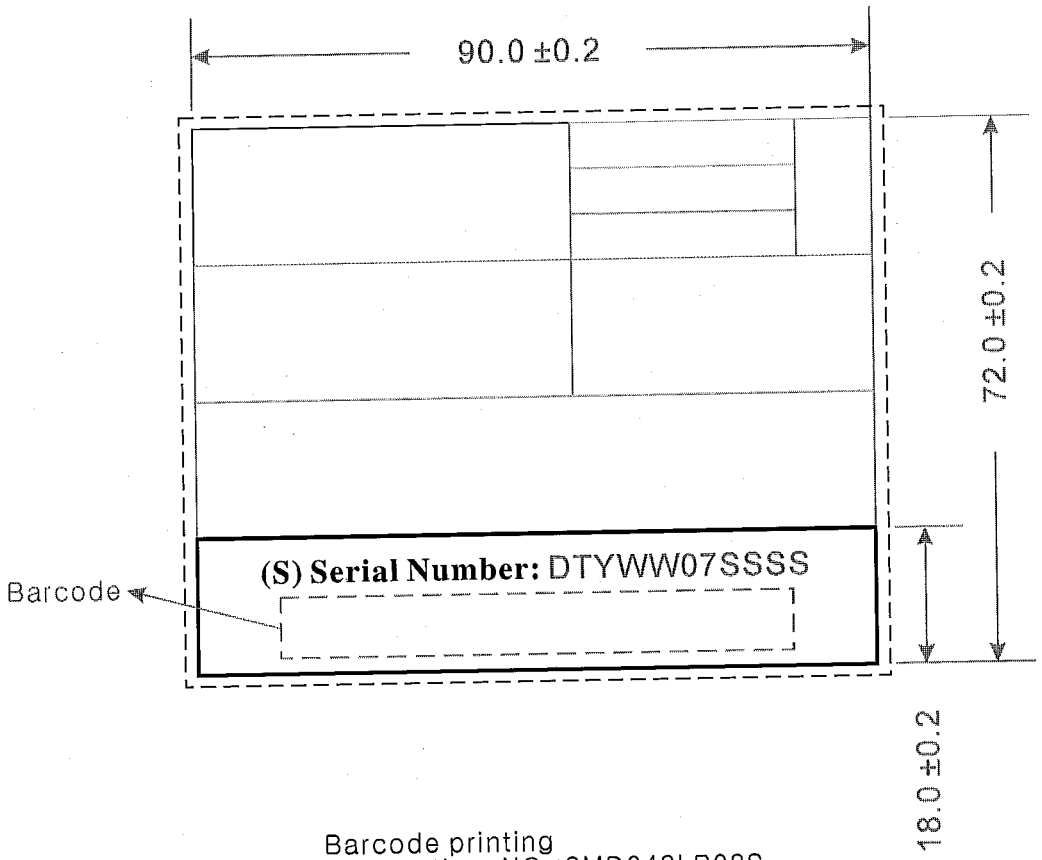

Barcode printing
Information NO.:8MD043LB02S

Note:
1.Use 3MDL4XLB570 Blank label.
2.Use Ricoh #B110A ribbon.

SALES	THIRD ANGLE PROJECTION	UNITS:mm	SCALE : 1 / 1	SHEET: 1 / 1	MODEL NO.: TSD-PT241W-AHN
JIN 0409 15:46		MATERIAL: See notes		TREATMENT: See notes	
PE	DSGD by JANE	2014/02/10	PART NAME: CARTON LABEL		
PCD	APPD by		PART NO.: 8MD043LB02S		VER. 1
NOCK 0409 1615	APPD No.:	FILE NAME: TSD-PT241W-AHN.cdr	DIVA Laboratories,Ltd.		

REV.	DATE	DESCRIPTION	BY	ARRD
0	2025/11/25	原尺寸18X90mm變更成22x88mm更改空白貼紙料號， 資訊料號不進階	Lyn	

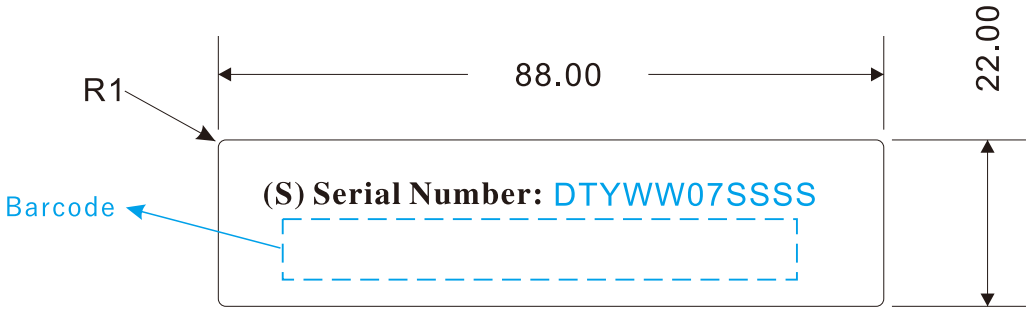

Barcode printing
Information NO.:8MD043LB02S

Notes:
1.Use 3MDL4XLB460 Blank label.
PEARLY PP SYNTHETIC PAPER(PP珠光合成紙)
Color:White
2.Use Ricoh #B110A ribbon.

PM / SALES		THIRD ANGLE PROJECTION	UNITS: mm	SCALE: 1/1	SHEET: 1/1	MODEL NO.:TSD-PT241W-AHN
Amber 1222 1140	Olin 1222 1430		MATERIAL: SEE NOTES		TREATMENT: SEE NOTES	
PE	PCD	DSGD by Lyn	2025/11/25	PART NAME: CARTON LABEL		
Nick_Lin 1222 1840	Joanne 1224 1955	APVD by		PART NO.: 8MD043LB02S		VER.1
		APVD NO.:	FILE NAME: TSD-PT241W-AHN.cdr	DIVA Laboratories, Ltd.		

REV.	DATE	DESCRIPTION	BY	APVD

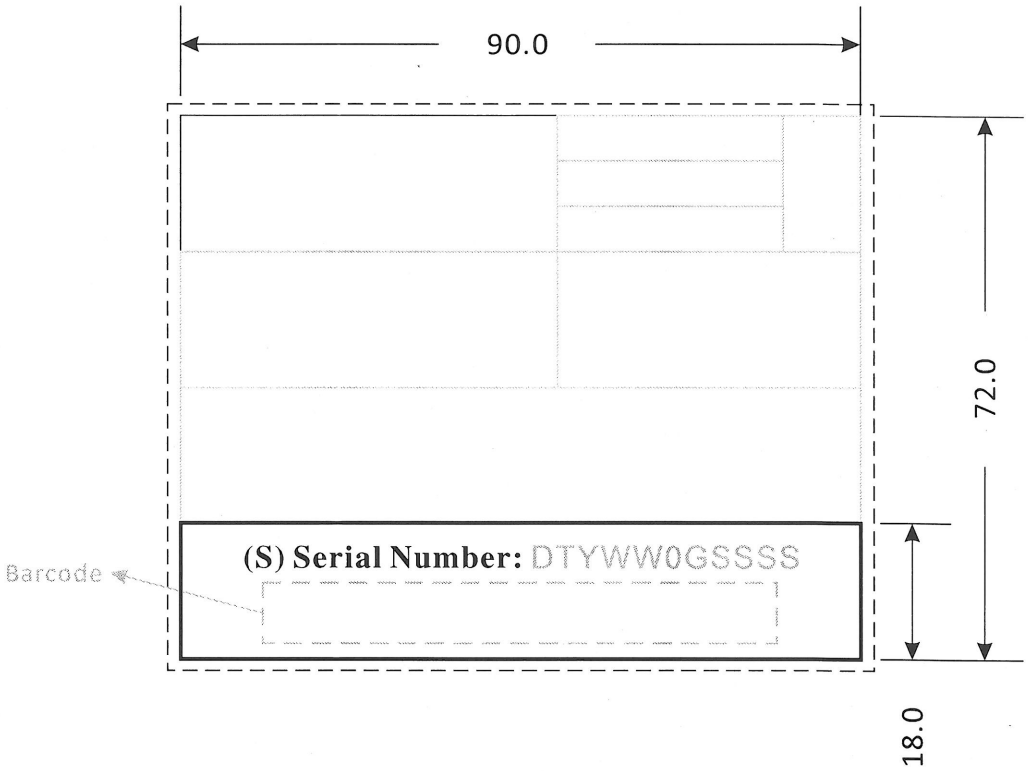

Note:
1.Use 3MDL4XLB570 Blank label.
2.Use Ricoh #B110A ribbon.

PM / SALES	THIRD ANGLE PROJECTION	UNITS: mm	SCALE: 1/1	SHEET: 1/1	MODEL NO.: TSD-PT241W-1AH
Shinichi 9/07 9/20		MATERIAL: SEE NOTES		TREATMENT: SEE NOTES	
PE	PCD	DSGD by JANE	2018/10/25	PART NAME: CARTON LABEL	
Rick 0107 10:55	Joanne 0109 11:15	APVD by		PART NO.: 8MD473LB020	VER.0
		APVD NO.:	FILE NAME: TSD-PT241W-1AH.cdr	DIVA Laboratories,Ltd.	

REV.	DATE	DESCRIPTION	BY	APVD
0	20250709	Change label size and Part Number remains unchanged	killy	

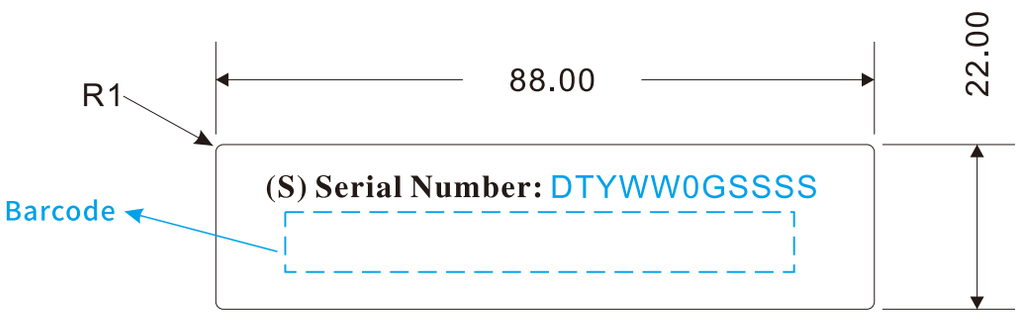

Notes:
1.Use 3MDL4XLB460 Blank label.
PEARLY PP SYNTHETIC PAPER(PP珠光合成紙)
Color:White
2.Use Ricoh #B110A ribbon.

PM / SALES		THIRD ANGLE PROJECTION	UNITS: mm	SCALE: 1/1	SHEET: 1/1	MODEL NO.: TSD-PT241W-1AH
Amber 1002 1420			MATERIAL: SEE NOTES		TREATMENT: SEE NOTES	
PE	PCD	DSGD by killy	20250711	PART NAME: CARTON LABEL		
Jaha 1007 1440	Joanne 1008 1930	APVD by		PART NO.: 8MD473LB020		VER.0
		APVD NO.:	FILE NAME: TSD-PT241W-1AH.cdr	DIVA Laboratories,Ltd.		

Killy_Lee

寄件者: oliver_chen@diva.com.tw
寄件日期: 2025年11月25日星期二 上午 10:43
收件者: 'Killy_Lee'; 'tina_chen'; lyn_chiang@diva.com.tw; 'Amber_Tsao 曹嘉雯'; 'Nick_Lin 林益銓'; '黃振哲_Terry'
副本: 'BowenWu 吳汶浦'; 'Joanne'; lyn_chiang@diva.com.tw
主旨: RE: 空白Label退料_AD-BOARD11-2_8MD254LB010空白物料3MDL4XLB570可否換成3MDL4XLB460

Dear Killy,

Review過後清單請參考下表。

再請協助發行。

@'黃振哲_Terry' Action標註的1A or 5A機種請協助EOL。

物料表用途	母件	母件物料說明	子件	子件物料說明	Action	Remark
M	1A2A24162101900	TSD-PT241W-AHN	8MD043LB02S	C/L PRINTING (TSD-PT241W-AHN)	EC	
M	2AAD0430012	PACKING (TSD-PT241W-AHN)	8MD043LB02S	C/L PRINTING (TSD-PT241W-AHN)	EC	
E	2AAD0430012	PACKING (TSD-PT241W-AHN)	8MD043LB02S	C/L PRINTING (TSD-PT241W-AHN)	EC	
M	1A40190007	AD-BOARD11-2	8MD254LB010	CARTON LABEL (AD-BOARD11-2)	EC	
M	2AAD2540012	PCBA PACKING (AD-BOARD11-2)	8MD254LB010	CARTON LABEL (AD-BOARD11-2)	EC	
M	1A2A32162301900	TSD-PT321W-1AH	8MD264LB030	CARTON LABEL (TSD-PT321W-1AH)	NA	RAP
M	2AAD2640012	PACKING (TSD-PT321W-1AH)	8MD264LB030	CARTON LABEL (TSD-PT321W-1AH)		如果只for上面(1A2A32162301900) NA，不然的話要EC
E	5A2A32232301900	TSD-PT321W-1AH	8MD264LB030	CARTON LABEL (TSD-PT321W-1AH)	EC	
M	1A1A32162101900	TSD-PT321W-S	8MD351LB020	CARTON LABEL (TSD-PT321W-S)	NA	RAP
M	2AAD3510012	PACKING (TSD-PT321W-S)	8MD351LB020	CARTON LABEL (TSD-PT321W-S)		如果只for上面(1A1A32162101900) NA，不然的話要EC
M	2AAD3600012	PACKING (TSD-AT1520-CB)	8MD360LB020	CARTON LABEL (TSD-AT1520-CB)	EC	
M	2AAD3870012	PACKING (TSD-AT1520-CW)	8MD360LB020	CARTON LABEL (TSD-AT1520-CB)	EC	
M	1A2A24162101901	TSD-PT241W-1AH	8MD473LB020	CARTON LABEL (TSD-PT241W-1AH)	NA	

M	1A40190008	AD-BOARD12	8MD475LB010	CARTON LABEL (AD-BOARD12)	EC	
M	1A40190009	AD-BOARD12-2	8MD503LB010	CARTON LABEL (AD BOARD 12-2)	EC	
E	5A40190003	AD-BOARD12-2	8MD503LB010	CARTON LABEL (AD BOARD 12-2)	EOL	
M	1A40190010	AD-BOARD12-3	8MD503LB110	CARTON LABEL (AD-BOARD12-3)	EC	
M	1A40190011	AD-BOARD13	8MD503LB210	CARTON LABEL (AD-BOARD13)	EC	
E	5A40190004	AD-BOARD13	8MD503LB210	CARTON LABEL (AD-BOARD13)	EOL	
M	1A2A2123Y101900	TSD-PT212-CB	8MD506LB020	CARTON LABEL (TSD-PT212-CB & CW)	EC	
M	1A2A2123Y101901	TSD-PT212-CW	8MD506LB020	CARTON LABEL (TSD-PT212-CB & CW)	EC	
E	5A2A2123Y101900	TSD-PT212-CB	8MD506LB020	CARTON LABEL (TSD-PT212-CB & CW)	EOL	
E	5A2A2123Y101901	TSD-PT212-CW	8MD506LB020	CARTON LABEL (TSD-PT212-CB & CW)	EOL	
M	1A50190002	TSD-TS1-W	8MD528LB020	CARTON LABEL (TSD-TS1-W)	EC	
E	5A50190001	TSD-TS1-W	8MD528LB020	CARTON LABEL (TSD-TS1-W)	EOL	
M	1A50190001	TSD-TS1-B	8MD529LB020	CARTON LABEL (TSD-TS1-B)	EC	
E	5A50190000	TSD-TS1-B	8MD529LB020	CARTON LABEL (TSD-TS1-B)	EOL	
M	1A1A24232101900	TSD-PT243-CW-2CT	8MD557LB120	CARTON LABEL (TSD-PT243-CW-2CT)	EC	

Best regards,
Oliver CHEN

From: Killy_Lee <killy_lee@diva.com.tw>
Sent: Friday, November 21, 2025 3:47 PM
To: oliver_chen@diva.com.tw; 'tina_chen' <tina_chen@diva.com.tw>; lyn_chiang@diva.com.tw; 'Amber_Tsao 曹嘉雯' <amber_tsao@diva.com.tw>; 'Nick_Lin 林益銓' <nick_lin@diva.com.tw>
Cc: '黃振哲_Terry' <terry_huang@diva.com.tw>; 'BowenWu 吳汶浦' <bowenwu@diva.com.tw>; 'Joanne' <joannehuang@diva.com.tw>; lyn_chiang@diva.com.tw
Subject: RE: 空白Label退料_AD-BOARD11-2_8MD254LB010空白物料3MDL4XLB570可否換成3MDL4XLB460

Dear Oliver
以前空白原物料並沒有列入BOM表，我們只能從後端印製的檔案去搜尋，提供清單如附件

可否請你幫忙協助告知清單內哪一些需要變更和EC，感謝

PS MEE的label 路徑 \\192.168.0.14\Mechanical\ME department\Carton Label\MEE

謝謝您
Killy lee (美嬿)
分機511

From: oliver_chen@diva.com.tw [mailto:oliver_chen@diva.com.tw]
Sent: Friday, November 21, 2025 11:17 AM
To: 'Killy_Lee' <killy_lee@diva.com.tw>; 'tina_chen' <tina_chen@diva.com.tw>; lyn_chiang@diva.com.tw; 'Amber_Tsao 曹嘉雯' <amber_tsao@diva.com.tw>
Cc: '黃振哲_Terry' <terry_huang@diva.com.tw>; 'BowenWu 吳汶浦' <bowenwu@diva.com.tw>; 'Nick_Lin 林益銓' <nick_lin@diva.com.tw>; 'Joanne' <joannehuang@diva.com.tw>
Subject: RE: 空白Label退料_AD-BOARD11-2_8MD254LB010空白物料3MDL4XLB570可否換成3MDL4XLB460

Dear Killy,

請提供EC資料請客戶回簽。

另外，請反查有用到的全部一起EC。

Best regards,
Oliver CHEN

From: Killy_Lee <killy_lee@diva.com.tw>
Sent: Friday, November 21, 2025 10:35 AM
To: 'tina_chen' <tina_chen@diva.com.tw>; lyn_chiang@diva.com.tw; Amber_Tsao 曹嘉雯 <amber_tsao@diva.com.tw>; Oliver_Chen 陳冠華 <oliver_chen@diva.com.tw>
Cc: '黃振哲_Terry' <terry_huang@diva.com.tw>; 'BowenWu 吳汶浦' <bowenwu@diva.com.tw>; 'Nick_Lin 林益銓' <nick_lin@diva.com.tw>; 'Joanne' <joannehuang@diva.com.tw>
Subject: RE: 空白Label退料_AD-BOARD11-2_8MD254LB010空白物料3MDL4XLB570可否換成3MDL4XLB460

Dear Oliver,Amber

8MD254LB010(如下圖)，使用空白料號為3MDL4XLB570_CARTON LABEL (WHITE,90*72mm,BLANK)，無庫存

，之前其他MEE機種有使用3MDL4XLB570有部分換成3MDL4XLB460，AD-BOARD11-2 可否直接替換變更，料號和內容都不變動，有需要通知客戶嗎?這端需要執行ECR，**已附上修正前後圖面，在請告知如何執行，**，謝謝

Before(3MDL4XLB570)

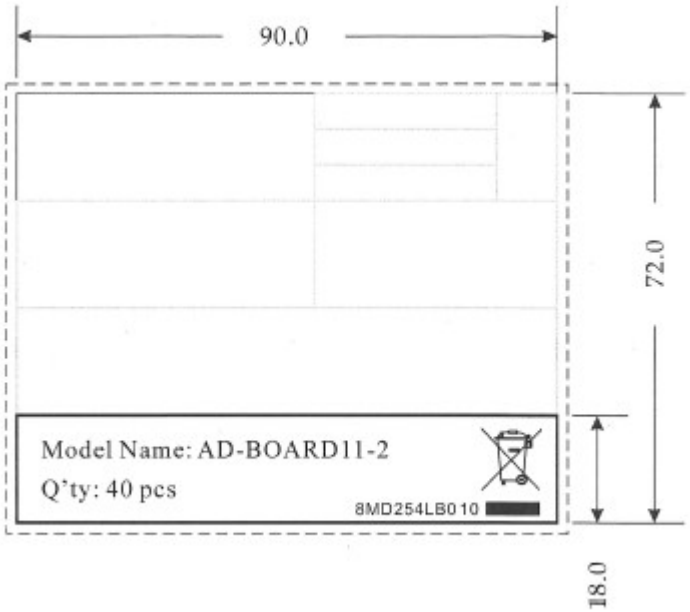

After (3MDL4XLB460)

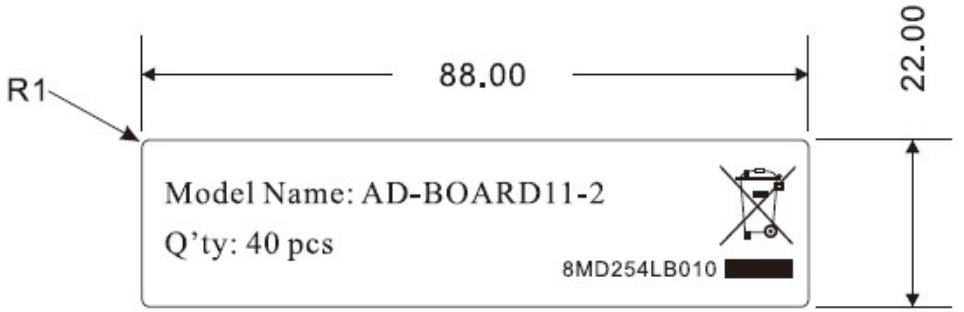

工單	PN	機種	料號	單位用量	用量總數	備註
2005727	1A40190007	AD-BOARD11-2	3MDL4XLB570	0.025	25	BOM未列
			3MDLX9LB030	1	1000	BOM未列

謝謝您

設計變更審查會議記錄

會議名稱	ECN/ECR	日期	2025/12/29	時間	09:00-10:00	地點	800 會議室
會議種類	例會						
主席	Sales- Oliver	與會人員	Oliver/ Rongchi / Killy / Nick/ Amber				
會議記錄	Killy	缺席人員	無				

主席指示事項：

No	工作項目	負責人
1.	ECN 文號 Change No. : 進行功能,性能及安全性評估	Killy

決議事項：

No	工作項目	負責人	狀態
1.	Label change.	Killy	執行

追蹤事項：

No	工作項目	負責人	完成日期	狀態

會議記錄內容：*(XXX)紅色部分表示該事項負責人

變更號碼：EC

機種名稱:

DIVA 料號	客戶型號	Label	料號
1A40190007	AD-BOARD11-2	CARTON LABEL	8MD254LB010
1A40190008	AD-BOARD12	CARTON LABEL	8MD475LB010
1A40190009	AD-BOARD12-2	CARTON LABEL	8MD503LB010
1A40190010	AD-BOARD12-3	CARTON LABEL	8MD503LB110
1A40190011	AD-BOARD13	CARTON LABEL	8MD503LB210
1A2A2123Y101900	TSD-PT212-CB	CARTON LABEL	8MD506LB020
1A2A2123Y101901	TSD-PT212-CW	CARTON LABEL	8MD506LB020
1A1A24232101900	TSD-PT243-CW-2CT	CARTON LABEL	8MD557LB120
1A50190002	TSD-TS1-W	CARTON LABEL	8MD528LB020
1A2A24162101900	TSD-PT241W-AHN	CARTON LABEL	8MD043LB02S
1A2A24162101901	TSD-PT241W-1AH	CARTON LABEL	8MD473LB020(有共用已會簽過)

設計變更原因：增加及變更 Carton label 空白原物料(Adding and changing blank raw materials)

設計變更描述: 3MD4XLB570 換成 3MD4XLB460

導入時程 : Normal

客戶審查 : Needed

一. 研發課評估:

單位	審查內容	附加文件
EE :	評估變更與硬體設計無關,不會造成硬體安全性影響	無
FW:	經評估變更與軟體設計無關,不會造成軟體安全性影響	無
ME:	經評估變更與機構設計無關,不會造成軟體安全性影響	無
SW:	經評估變更與軟體設計無關,不會造成軟體安全性影響	無
DQE:	經評估變更與 DQE 設計無關,不會造成軟體安全性影響	無

二 結論:

1. LABELS UPDATE.
2. 開發單位各部門評估後,此設計變更不會對產品預期用途造成影響,

功能	設計變更內容無關功能影響
性能	設計變更內容,無關產品性能影響
可用性	無影響,沒有使用上的風險
安全性	組裝方式沒有改變, 沒有安全性風險,
法規	經審查,沒有影響法規內容