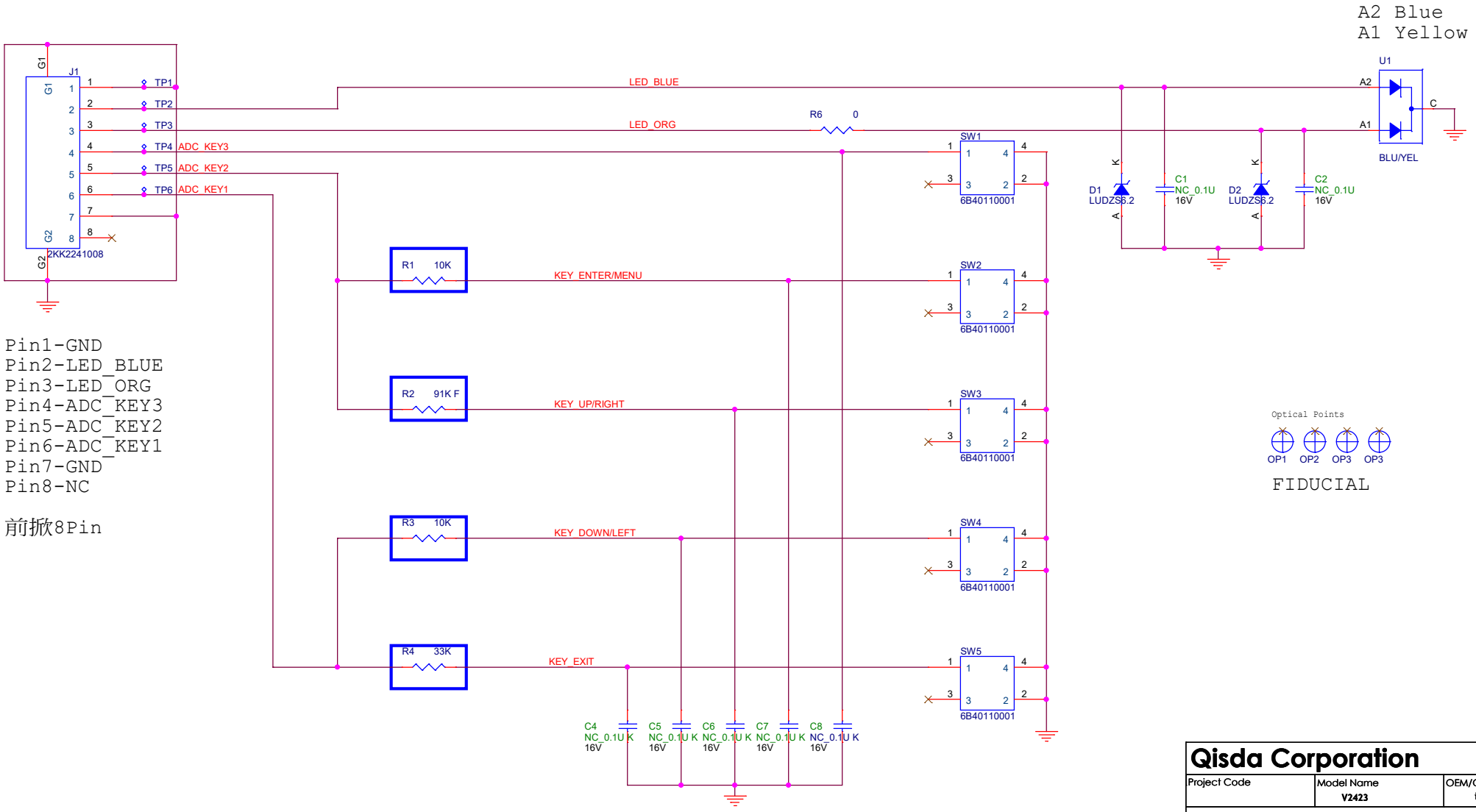

Qisda Corporation			
Project Code	Model Name: V2423	OEM/ODM Model Name: iiyama	
Title: Key BD			
Size	PCB P/N: 4H.61Q03.A00	PCB Rev.: A00	Document Number / Rev.: 0
Date: Wednesday, July 12, 2023	Sheet 1 of 1		
Prepared By: Steve YH Chang	Reviewed By: Willi Fan	Approved By: Brian Juan	