版本 REV.	日 期 DATE	DCN NO.	变更内容 DESCRIPTION	制图 DRAWN

成品规格图号DRAWING NO. M3962001S

No. of Contacts	DIMENSIONS A	B	C
2	3.96	7.92	5.34
3	7.92	11.88	9.30
4	11.88	15.84	13.26
5	15.85	19.80	17.22
6	19.80	23.76	21.18
7	23.76	27.72	25.14
8	27.72	31.68	29.10

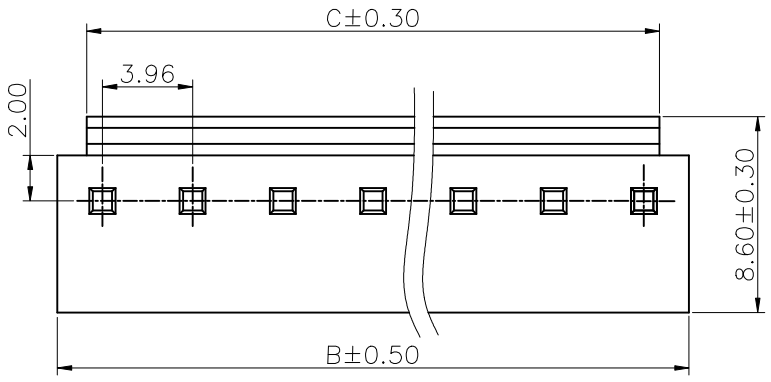

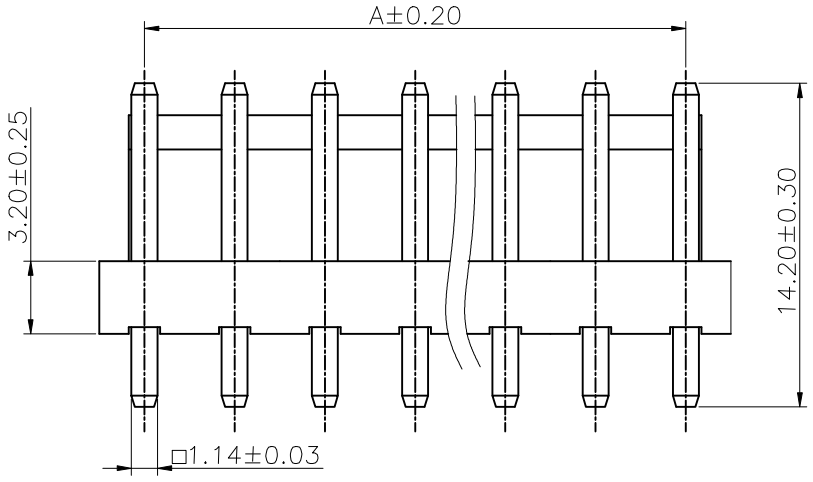

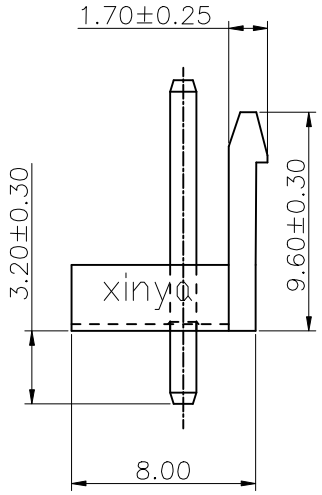

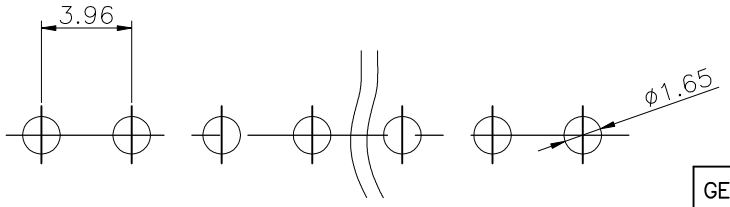

Hole Layout
(Tolerance: ±0.05)

Product Code:

M3962 – X A C – A
① ②③④ ⑤

① Series NO.

② Circuits number

③ Plating Code:

Definition	Code
◎ Tin plated:	A
Prefix "V" means lead free plating	

④ C: Complete Pin

⑤ Solder Area=3.2mm

NOTES:
1. Temperature range: −25°C ~ +85°C
2. Voltage rating: 250V,AC,DC
3. Current rating: 7A
4. Contact resistance: 10 mΩ Max
5. Insulation resistance: 1000MΩ Min
6. Withstand voltage: 1000V,AC/minute
7. Material:
   Housing: PA66, UL 94V–0. Natural
   Contact: Copper Alloy

GENERL TOLERANCE		制 图 (DR.)		料号 PART NO.	M3962–XAC–A	版本 REV.	A
X.±0.30	X.°±2°	审 核 (CHK.)		品名 TITLE	P3.96 CONNECTOR	页次 SHEET	1/1
.X±0.25	.X°±1°	核 准 (APPD.)		客户料号 CUTM.NO.			
.XX±0.20	.XX°±0.5°	第1版 (OR.D.)	2025.12.01				
.XXX±0.15	.XXX°±0.5°	单 位 UNITS	MM 比例 SCALE 1:1				

苏州新亚电通股份有限公司
SUZHOU XINYA ELECTRIC COMMUNICATION Co., LTD.