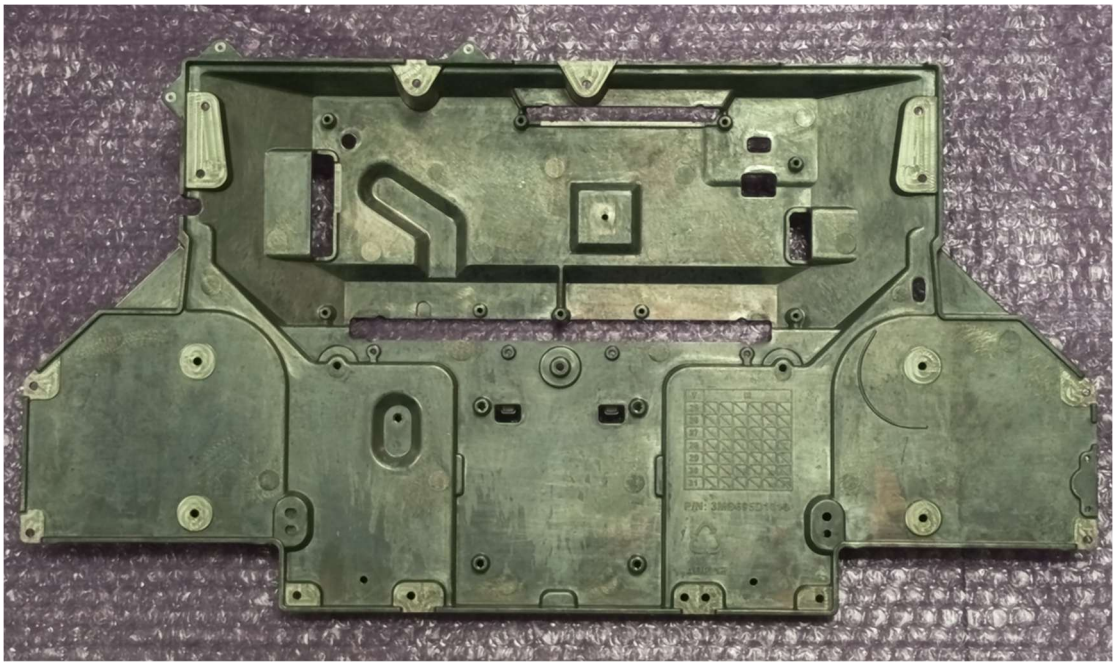

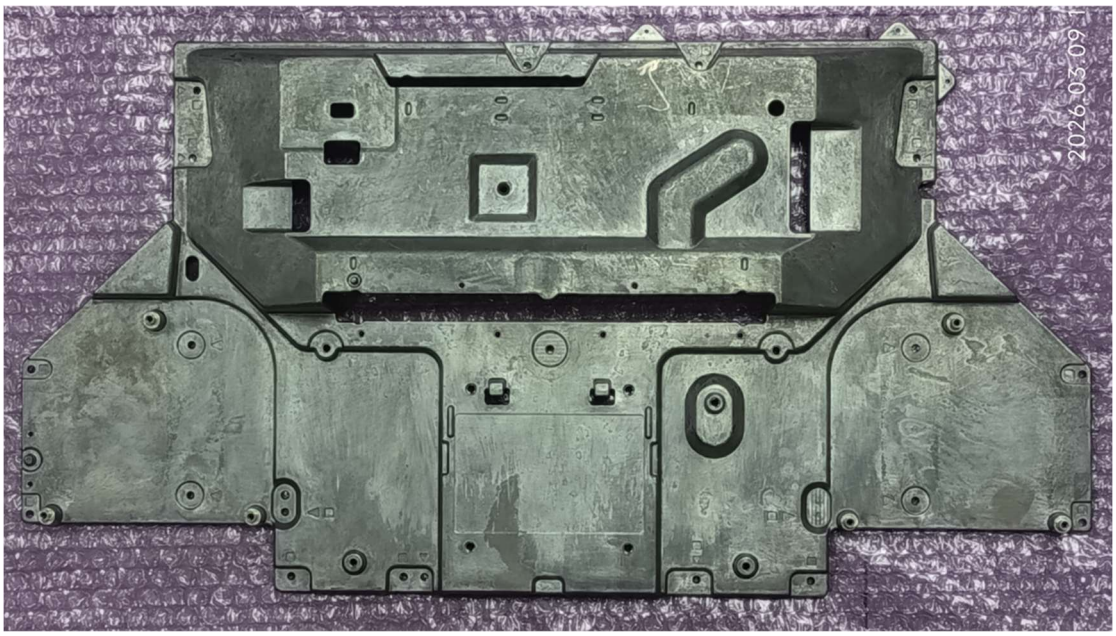

設計驗證
工程課
2026 -03- 09
發行

夏煜企業股份有限公司
安徽将煜电子科技有限公司
承認書

客戶: 钰纬科技开发股份有限公司

品名: MAIN BRACKET

料號: 3MD695D1010(M3528)

版本: A

日期: 2026 年 1 月 14 日

客戶承認部門	製造廠商
設計驗證 工程課 2026 -03- 09 發行 钰纬科技开发股份有限公司	安徽将煜电子科技有限公司 3405210038361

聯絡人:彭永
手機：18913722976
公司電話:555 6812-666 转 620
邮箱:jyq01@yu-metal.com

安徽将煜电子科技有限公司

包装作业指导书

基本资料									
客户	钰纬	客户品名	VM15	客户料号	3MD695D1010	版次	A0	页次	1

品号	名称	规格	用量	单位	单品净重/KG
10802-00144	纸箱	595*330*320（A85）	1	PCS	
10808-00090	刀卡	581/2*314/2*300	1	PCS	
10803-00114	隔板	510*310*7	3	PCS	
10804-00031	气泡袋	550*400	6	PCS	
10812-00005	栈板	1200*1000*120			
单品净重：约0.985KG		每箱净重：约5.91KG	每箱毛重：约7.8KG		

作业细则

1. 取外观全检OK的产品，放置在包装作业台上，使用气泡袋进行包装，保护产品，如图1；
2. 将产品依次放进刀卡中，产品侧立而放，平面对着平面，每个封槽放置2PCS产品，中间用隔板隔开，每箱共计放置产品6PCS，最后封箱。如图2；
3. 栈板摆放方式，一层放置6箱，共计可放置6层，如图3（此方式仅供参考，放置层数实际依货柜尺寸生管自行评估）。因公司出货数量原因，栈板数据仅为出货参考数据，具体生管出货可依据实际出货数量选用合适栈板。

交货标签

标签格式示范

鈺緯科技開發股份有限公司		RoHS 合格
廠商名稱:		
鈺緯料號:		收貨標籤
訂單編號:		
交貨數量:		
廠商料號:		
料號敘述:		
LOT/批號:		
製造日期:	20250930(8碼)	
保存期限:	20260930(8碼)	

注意事项

1. 操作时必须戴手套或指套
2. 注意装箱数量，不可多装，短装。尾数箱须注明。
3. 此方案仅适用于货柜运输。

作业图示

产品单重图示



图示1

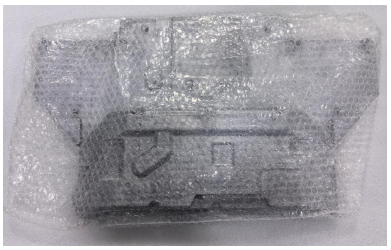

图示2



图示3

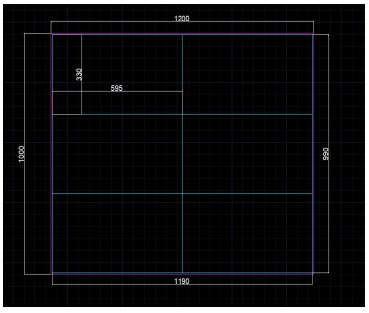

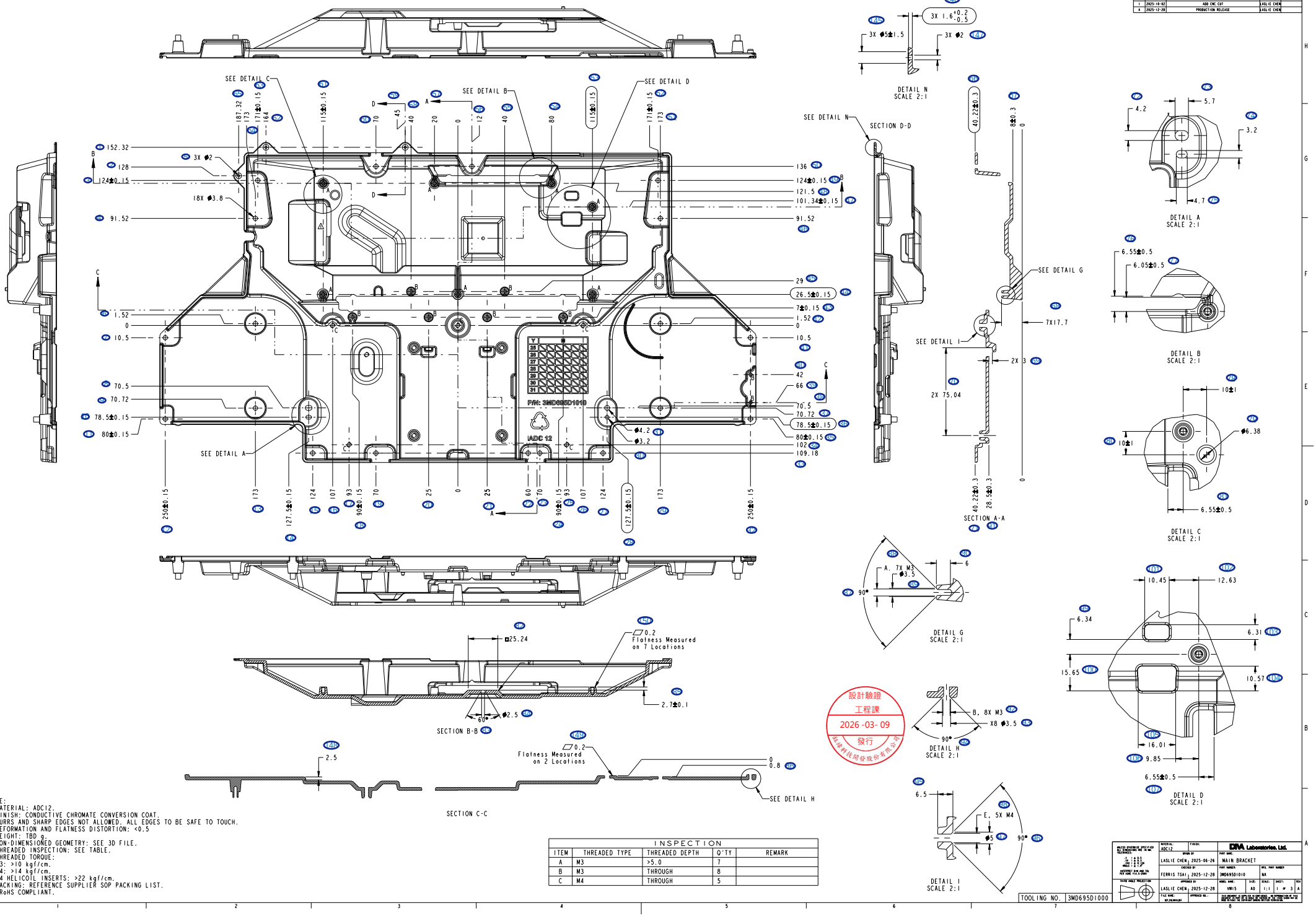

REV	DATE	DESCRIPTION	DRAFT	APPROVED
0	2025-07-24	INITIAL RELEASE	LASLIE CHEN	
1	2025-10-02	ADD CNC CUT	LASLIE CHEN	
A	2025-12-28	PRODUCTION RELEASE	LASLIE CHEN	

NOTE:
1.MATERIAL: ADC12.
2.FINISH: CONDUCTIVE CHROMATE CONVERSION COAT.
3.BURRS AND SHARP EDGES NOT ALLOWED. ALL EDGES TO BE SAFE TO TOUCH.
4.DEFORMATION AND FLATNESS DISTORTION: <0.5
5.WEIGHT: TBD g.
6.NON-DIMENSIONED GEOMETRY: SEE 3D FILE.
7.THREADED INSPECTION: SEE TABLE.
8.THREADED TORQUE:
M3: >10 kgf/cm.
M4: >14 kgf/cm.
M4 HELICOIL INSERTS: >22 kgf/cm.
9.PACKING: REFERENCE SUPPLIER SOP PACKING LIST.
10.RoHS COMPLIANT.

INSPECTION

ITEM	THREADED TYPE	THREADED DEPTH	Q'TY	REMARK
A	M3	>5.0	7	
B	M3	THROUGH	8	
C	M4	THROUGH	5	

設計驗證 工程課 2026-03-09 發行

MATERIAL: ADC12	FINISH:	DMA Laboratories, Ltd.	
DRAWN BY: LASLIE CHEN 2025-06-26	PART NAME: MAIN BRACKET		
CHECKED BY: FERRIS TSAI 2025-12-28	PART NUMBER: 3MD695D1010	MFG. PART NUMBER: NA	
APPROVED BY: LASLIE CHEN 2025-12-28	MODEL NAME: VM1S	SIZE: A0	SCALE: 1:1
FILE NAME:	APPROVED NO.:	SHEET: 1 OF 3	REV: A

TOOLING NO. 3MD695D1000

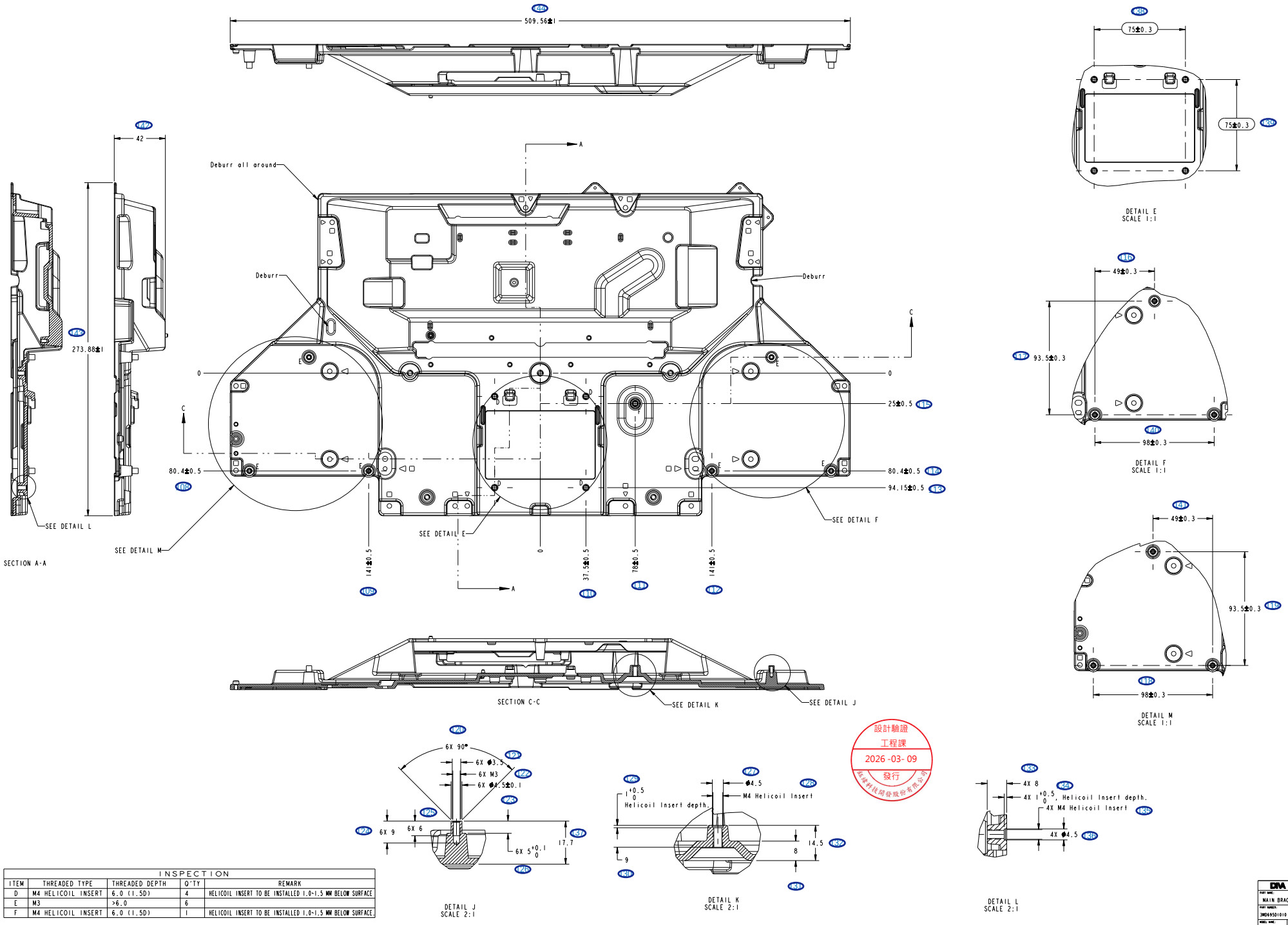

INSPECTION				
ITEM	THREADED TYPE	THREADED DEPTH	Q'TY	REMARK
D	M4 HELICOIL INSERT	6.0 (1.5D)	4	HELICOIL INSERT TO BE INSTALLED 1.0~1.5 MM BELOW SURFACE
E	M3	>6.0	6	
F	M4 HELICOIL INSERT	6.0 (1.5D)	1	HELICOIL INSERT TO BE INSTALLED 1.0~1.5 MM BELOW SURFACE.

設計驗證
工程課
2026 -03- 09
發行

DMA Laboratories, Ltd.

PART NAME: MAIN BRACKET			
PART NUMBER: 3MD695D1010		MFG. PART NUMBER N/A	
MODEL NAME: VM1S	SIZE: A0	SCALE: 1:1	SHEET: 2 OF 3
			REV A

Machining "Front Side"

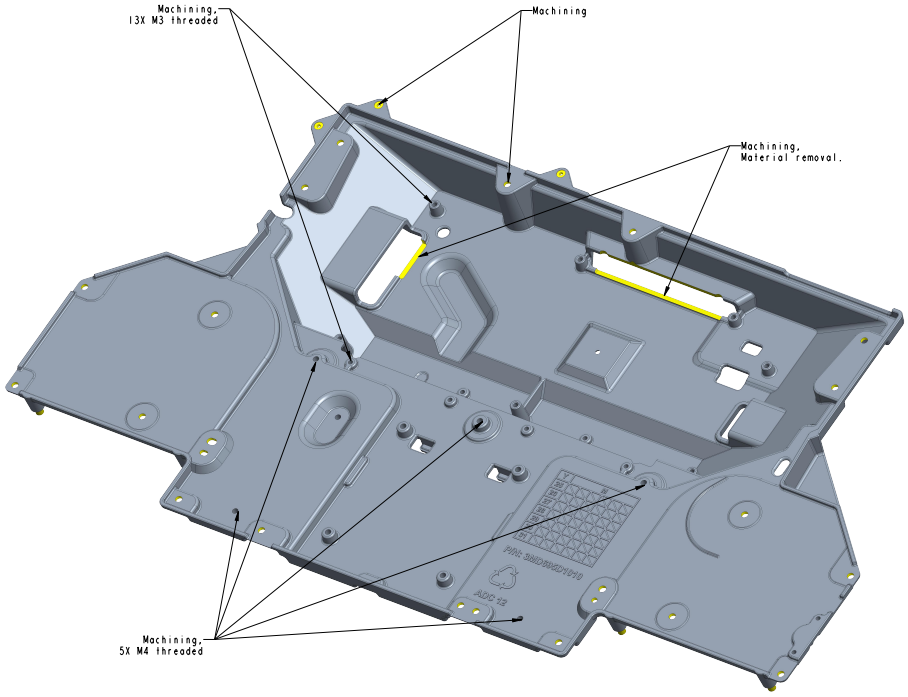

SCALE 1:1

Machining "Back Side"

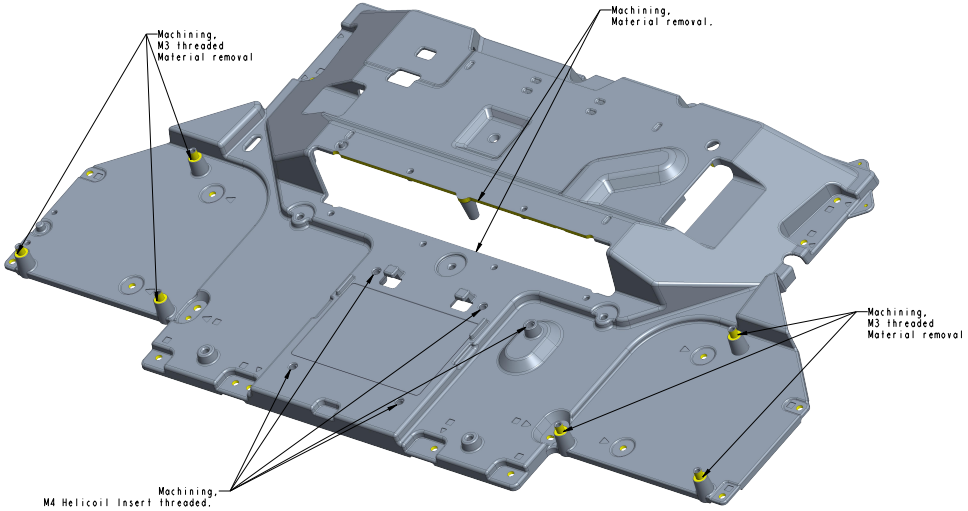

SCALE 1:1

DNA Laboratories, Ltd.

PART NAME: MAIN BRACKET				
PART NUMBER: 3M0695D1010		MFG. PART NUMBER: N/A		
MODEL NAME: VM15	SIZE: A0	SCALE: 1:1	SHEET: 3 OF 3	REV: A

THIS DRAWING IS DNA-LTD. AS CONFIDENTIAL. NO INFORMATION OF THIS DRAWING MAY BE DISCLOSED TO THE COPYRIGHT OWNER WITHOUT THE WRITTEN PERMISSION.

夏煜有限公司
安徽将煜电子科技有限公司
FAI量測報告

客戶: 钰纬	品名: MAIN BRACKET	版次: A	日期: 2025.12.10
機種: VM15	料號: 3MD695D1010	材質: ADC12	量測人員: 谢小琴

圖 面 尺 寸					量測結果						量測分析				備註
					量測數值			誤差值			% Tolerance		Acc/Rej		
項目	註解	規格	+TOL	-TOL	1	2	3	1	2	3	較高	較低	高	低	
1		152.32			152.41	152.40	152.43	*0.090*	*0.080*	*0.110*					
2		128			128.09	128.06	128.10	*0.090*	*0.060*	*0.100*					
3		124	0.15	0.15	124.07	124.05	123.98	*0.070*	*0.050*	*-0.020*	0%	13%			
4		91.52			91.58	91.54	91.56	*0.060*	*0.020*	*0.040*					
5-1		2			2.01	2.02	2.00	*0.010*	*0.020*	*0.000*					
5-2		2			2.01	2.00	2.02	*0.010*	*0.000*	*0.020*					
5-3		2			2.00	2.03	2.00	*0.000*	*0.030*	*0.000*					
6		1.52			1.57	1.58	1.55	*0.050*	*0.060*	*0.030*					
7		10.5			10.47	10.48	10.49	*-0.030*	*-0.020*	*-0.010*					
8		70.5			70.41	70.46	70.45	*-0.090*	*-0.040*	*-0.050*					
9		70.72			70.69	70.73	70.69	*-0.030*	*0.010*	*-0.030*					
10		78.5	0.15	0.15	78.47	78.48	78.50	*-0.030*	*-0.020*	*0.000*	0%	20%			
11		80	0.15	0.15	80.07	80.09	80.06	*0.070*	*0.090*	*0.060*	0%	-40%			
12		250	0.15	0.15	250.08	250.06	250.03	*0.080*	*0.060*	*0.030*	0%	-20%			
13		173			172.89	172.90	172.95	*-0.110*	*-0.100*	*-0.050*					
14		127.5	0.15	0.15	127.41	127.45	127.44	*-0.090*	*-0.050*	*-0.060*	0%	60%			
15		124			123.97	123.99	123.98	*-0.030*	*-0.010*	*-0.020*					
16		107			106.95	107.02	106.98	*-0.050*	*0.020*	*-0.020*					
17		93			92.99	93.00	93.02	*-0.010*	*0.000*	*0.020*					
18		90	0.15	0.15	89.94	89.95	89.98	*-0.060*	*-0.050*	*-0.020*	0%	40%			
19		70			69.95	69.98	70.02	*-0.050*	*-0.020*	*0.020*					
20		25			24.94	25.01	24.96	*-0.060*	*0.010*	*-0.040*					
21		25			25.07	25.05	25.03	*0.070*	*0.050*	*0.030*					
22		60			60.11	60.09	60.05	*0.110*	*0.090*	*0.050*					
23		70			70.09	70.04	70.06	*0.090*	*0.040*	*0.060*					
24		90	0.15	0.15	90.11	90.10	90.08	*0.110*	*0.100*	*0.080*	0%	-53%			
25		93			93.11	93.06	93.10	*0.110*	*0.060*	*0.100*					
26		107			107.14	107.12	107.08	*0.140*	*0.120*	*0.080*					
27		124			124.06	124.05	124.08	*0.060*	*0.050*	*0.080*					
28		127.5	0.15	0.15	127.51	127.50	127.52	*0.010*	*0.000*	*0.020*	0%	0%			
29		173			173.05	173.02	173.00	*0.050*	*0.020*	*0.000*					
30		3.2			3.82	3.80	3.80	*0.620*	*0.600*	*0.600*					
31		4.2			4.21	4.20	4.23	*0.010*	*0.000*	*0.030*					
32		250	0.15	0.15	250.07	250.03	250.05	*0.070*	*0.030*	*0.050*	0%	-20%			
33		109.18			109.12	109.13	109.14	*-0.060*	*-0.050*	*-0.040*					
34		102			101.94	101.95	101.96	*-0.060*	*-0.050*	*-0.040*					

夏煜有限公司
安徽将煜电子科技有限公司
FAI量测報告

客戶:	钰纬	品名:	MAIN BRACKET	版次:	A	日期:	2025.12.10
機種:	VM15	料號:	3MD695D1010	材質:	ADC12	量測人員:	谢小琴

圖 面 尺 寸					量測結果						量測分析				備註
					量測數值			誤差值			% Tolerance		Acc/Rej		
項目	註解	規格	+TOL	-TOL	1	2	3	1	2	3	較高	較低	高	低	
35		80	0.15	0.15	79.91	79.96	79.93	*-0.090*	*-0.040*	*-0.070*	0%	60%			
36		78.5	0.15	0.15	78.58	78.46	78.45	*0.080*	*-0.040*	*-0.050*	0%	33%			
37		70.72			70.64	70.64	70.66	*-0.080*	*-0.080*	*-0.060*					
38		70.5			70.47	70.48	70.52	*-0.030*	*-0.020*	*0.020*					
39		66			65.95	65.98	66.03	*-0.050*	*-0.020*	*0.030*					
40		42			41.91	41.95	41.92	*-0.090*	*-0.050*	*-0.080*					
41		10.5			10.42	10.42	10.45	*-0.080*	*-0.080*	*-0.050*					
42		1.52			1.48	1.49	1.51	*-0.040*	*-0.030*	*-0.010*					
43		7	0.15	0.15	7.09	7.06	7.08	*0.090*	*0.060*	*0.080*	0%	-40%			
44		26.5	0.15	0.15	26.59	26.56	26.51	*0.090*	*0.060*	*0.010*	0%	-7%			
45		29			29.08	29.04	29.06	*0.080*	*0.040*	*0.060*					
46		91.52			91.59	91.54	91.58	*0.070*	*0.020*	*0.060*					
47		101.34	0.15	0.15	101.39	101.34	101.38	*0.050*	*0.000*	*0.040*	0%	0%			
48		121.5			121.57	121.54	121.59	*0.070*	*0.040*	*0.090*					
49		124	0.15	0.15	124.09	124.07	124.05	*0.090*	*0.070*	*0.050*	0%	-33%			
50		136			136.05	136.04	136.00	*0.050*	*0.040*	*0.000*					
51		173			173.12	173.10	173.08	*0.120*	*0.100*	*0.080*					
52		171	0.15	0.15	171.07	171.06	171.05	*0.070*	*0.060*	*0.050*	0%	-33%			
53		115	0.15	0.15	115.08	115.06	115.03	*0.080*	*0.060*	*0.030*	0%	-20%			
54		80			80.09	80.03	80.07	*0.090*	*0.030*	*0.070*					
55		40			40.07	40.03	40.05	*0.070*	*0.030*	*0.050*					
56		12			12.09	12.07	12.05	*0.090*	*0.070*	*0.050*					
57		20			20.07	20.03	20.05	*0.070*	*0.030*	*0.050*					
58		40			40.09	40.05	40.06	*0.090*	*0.050*	*0.060*					
59		45			45.05	45.03	45.06	*0.050*	*0.030*	*0.060*					
60		70			70.04	70.05	70.00	*0.040*	*0.050*	*0.000*					
61		115	0.15	0.15	115.08	115.06	115.03	*0.080*	*0.060*	*0.030*	0%	-20%			
62		164			164.07	164.02	164.05	*0.070*	*0.020*	*0.050*					
63		171	0.15	0.15	171.09	171.06	171.08	*0.090*	*0.060*	*0.080*	0%	-40%			
64		173			173.11	173.06	173.10	*0.110*	*0.060*	*0.100*					
65		187.32			187.25	187.28	187.30	*-0.070*	*-0.040*	*-0.020*					
66		40.22	0.3	0.3	40.48	40.42	40.45	*0.260*	*0.200*	*0.230*	0%	-67%			
67		8	0.3	0.3	8.12	8.13	8.10	*0.120*	*0.130*	*0.100*	0%	-33%			
68-1		17.7			17.86	17.80	17.82	*0.160*	*0.100*	*0.120*					
68-2		17.7			17.86	17.80	17.77	*0.160*	*0.100*	*0.070*					
68-3		17.7			17.83	17.74	17.82	*0.130*	*0.040*	*0.120*					

夏煜有限公司
安徽将煜电子科技有限公司
FAI量测報告

客戶:	钰纬	品名:	MAIN BRACKET	版次:	A	日期:	2025.12.10
機種:	VM15	料號:	3MD695D1010	材質:	ADC12	量測人員:	谢小琴

圖 面 尺 寸					量測結果						量測分析				備註
					量測數值			誤差值			% Tolerance		Acc/Rej		
項目	註解	規格	+TOL	-TOL	1	2	3	1	2	3	較高	較低	高	低	
68-4		17.7			17.86	17.80	17.82	*0.160*	*0.100*	*0.120*					
68-5		17.7			17.77	17.82	17.78	*0.070*	*0.120*	*0.080*					
68-6		17.7			17.82	17.80	17.77	*0.120*	*0.100*	*0.070*					
68-7		17.7			17.77	17.81	17.82	*0.070*	*0.110*	*0.120*					
69-1		3			3.09	3.06	3.05	*0.090*	*0.060*	*0.050*					
69-2		3			3.07	3.03	3.05	*0.070*	*0.030*	*0.050*					
70-1		75.04			75.18	75.12	75.15	*0.140*	*0.080*	*0.110*					
70-2		75.04			75.15	75.14	75.10	*0.110*	*0.100*	*0.060*					
71		40.22	0.3	0.3	40.20	40.18	40.15	*-0.020*	*-0.040*	*-0.070*	0%	23%			
72		4.2			4.34	4.30	4.31	*0.140*	*0.100*	*0.110*					
73		5.7			5.84	5.82	5.80	*0.140*	*0.120*	*0.100*					
74		3.2			3.97	3.90	3.85	*0.770*	*0.700*	*0.650*					
75		4.7			5.50	5.48	5.50	*0.800*	*0.780*	*0.800*					
76		6.55	0.5	0.5	6.34	6.32	6.38	*-0.210*	*-0.230*	*-0.170*	0%	46%			
77		6.05	0.5	0.5	6.28	6.23	6.25	*0.230*	*0.180*	*0.200*	0%	-36%			
78		10	1	1	10.28	10.25	10.29	*0.280*	*0.250*	*0.290*	0%	-25%			
79		6.38			6.46	6.50	6.51	*0.080*	*0.120*	*0.130*					
80		10	1	1	10.24	10.23	10.22	*0.240*	*0.230*	*0.220*	0%	-22%			
81		6.55	0.5	0.5	6.23	6.22	6.20	*-0.320*	*-0.330*	*-0.350*	0%	70%		Alert	
82		25.24			25.20	25.18	25.30	*-0.040*	*-0.060*	*0.060*					
83		60	0.5	0.5	60.08	60.20	60.15	*0.080*	*0.200*	*0.150*	0%	-16%			
84		2.5			2.55	2.50	2.48	*0.050*	*0.000*	*-0.020*					
85		2.7	0.1	0.1	2.65	2.72	2.62	*-0.050*	*0.020*	*-0.080*	0%	80%		Alert	
86		0.8			0.74	0.75	0.78	*-0.060*	*-0.050*	*-0.020*					
87		90			90.08	90.05	90.12	*0.080*	*0.050*	*0.120*					
88-1		M3			OK	OK	OK								
88-2		M3			OK	OK	OK								
88-3		M3			OK	OK	OK								
88-4		M3			OK	OK	OK								
88-5		M3			OK	OK	OK								
88-6		M3			OK	OK	OK								
88-7		M3			OK	OK	OK								
89		3.5			3.48	3.52	3.55	*-0.020*	*0.020*	*0.050*					
90		6			6.34	6.31	6.30	*0.340*	*0.310*	*0.300*					
91		28.5	0.3	0.3	28.51	28.58	28.46	*0.010*	*0.080*	*-0.040*	0%	13%			
92-1		M3			OK	OK	OK								

夏煜有限公司
安徽将煜电子科技有限公司
FAI量测報告

客戶:	钰纬	品名:	MAIN BRACKET	版次:	A	日期:	2025.12.10
機種:	VM15	料號:	3MD695D1010	材質:	ADC12	量測人員:	谢小琴

圖 面 尺 寸					量測結果						量測分析				備註
					量測數值			誤差值			% Tolerance		Acc/Rej		
項目	註解	規格	+TOL	-TOL	1	2	3	1	2	3	較高	較低	高	低	
92-2		M3			OK	OK	OK								
92-3		M3			OK	OK	OK								
92-4		M3			OK	OK	OK								
92-5		M3			OK	OK	OK								
92-6		M3			OK	OK	OK								
92-7		M3			OK	OK	OK								
92-8		M3			OK	OK	OK								
93-1		3.5			3.48	3.52	3.50	*-0.020*	*0.020*	*0.000*					
93-2		3.5			3.53	3.54	3.51	*0.030*	*0.040*	*0.010*					
93-3		3.5			3.50	3.51	3.58	*0.000*	*0.010*	*0.080*					
93-4		3.5			3.52	3.46	3.55	*0.020*	*-0.040*	*0.050*					
93-5		3.5			3.48	3.52	3.50	*-0.020*	*0.020*	*0.000*					
93-6		3.5			3.50	3.51	3.58	*0.000*	*0.010*	*0.080*					
93-7		3.5			3.53	3.54	3.51	*0.030*	*0.040*	*0.010*					
93-8		3.5			3.54	3.54	3.57	*0.040*	*0.040*	*0.070*					
94		90	0.5	0.5	89.90	90.12	90.00	*-0.100*	*0.120*	*0.000*	0%	20%			
95		6.5			6.60	6.56	6.50	*0.100*	*0.060*	*0.000*					
96		90	0.5	0.5	89.90	90.00	90.05	*-0.100*	*0.000*	*0.050*	0%	20%			
97		5			5.05	5.02	5.00	*0.050*	*0.020*	*0.000*					
98-1		M4			OK	OK	OK								
98-2		M4			OK	OK	OK								
98-3		M4			OK	OK	OK								
98-4		M4			OK	OK	OK								
98-5		M4			OK	OK	OK								
99		6.34			6.49	6.35	6.33	*0.150*	*0.010*	*-0.010*					
100		15.65			15.48	15.56	15.49	*-0.170*	*-0.090*	*-0.160*					
101		10.45			10.58	10.58	10.55	*0.130*	*0.130*	*0.100*					
102		12.63			12.48	12.56	12.55	*-0.150*	*-0.070*	*-0.080*					
103		6.31			6.47	6.44	6.45	*0.160*	*0.130*	*0.140*					
104		10.57			10.67	10.60	40.63	*0.100*	*0.030*	*30.060*					
105		16.01			16.11	16.12	16.21	*0.100*	*0.110*	*0.200*					
106		9.85			9.71	9.75	9.76	*-0.140*	*-0.100*	*-0.090*					
107		6.55	0.5	0.5	6.74	6.78	6.69	*0.190*	*0.230*	*0.140*	0%	-28%			
108		80.4	0.5	0.5	80.34	80.39	80.35	*-0.060*	*-0.010*	*-0.050*	0%	12%			
109		141	0.5	0.5	141.07	141.02	141.12	*0.070*	*0.020*	*0.120*	0%	-4%			
110		37.5	0.5	0.5	37.59	37.50	37.51	*0.090*	*0.000*	*0.010*	0%	0%			

夏煜有限公司
安徽将煜电子科技有限公司
FAI量测報告

客戶:	钰纬	品名:	MAIN BRACKET	版次:	A	日期:	2025.12.10
機種:	VM15	料號:	3MD695D1010	材質:	ADC12	量測人員:	谢小琴

圖 面 尺 寸					量測結果						量測分析				備註
					量測數值			誤差值			% Tolerance		Acc/Rej		
項目	註解	規格	+TOL	-TOL	1	2	3	1	2	3	較高	較低	高	低	
111		78	0.5	0.5	78.18	78.26	78.20	*0.180*	*0.260*	*0.200*	0%	-36%			
112		141	0.5	0.5	141.09	141.15	141.05	*0.090*	*0.150*	*0.050*	0%	-10%			
113		94.15	0.5	0.5	94.24	94.28	94.20	*0.090*	*0.130*	*0.050*	0%	-10%			
114		80.4	0.5	0.5	80.43	80.52	80.48	*0.030*	*0.120*	*0.080*	0%	-6%			
115		25	0.5	0.5	25.23	25.50	25.30	*0.230*	*0.500*	*0.300*	0%	-46%			
116		49	0.3	0.3	49.15	49.10	49.06	*0.150*	*0.100*	*0.060*	0%	-20%			
117		93.5	0.3	0.3	93.40	93.45	93.52	*-0.100*	*-0.050*	*0.020*	0%	33%			
118		98	0.3	0.3	98.12	98.00	97.92	*0.120*	*0.000*	*-0.080*	0%	27%			
119		93.5	0.3	0.3	93.49	93.47	93.45	*-0.010*	*-0.030*	*-0.050*	0%	17%			
120-1		90			90.12	90.06	90.08	*0.120*	*0.060*	*0.080*					
120-2		90			90.05	90.06	90.09	*0.050*	*0.056*	*0.090*					
120-3		90			90.12	90.06	90.08	*0.120*	*0.060*	*0.080*					
120-4		90			90.05	90.06	90.09	*0.050*	*0.056*	*0.090*					
120-5		90			90.07	90.02	90.00	*0.070*	*0.020*	*0.000*					
120-6		90			90.12	90.06	90.08	*0.120*	*0.060*	*0.080*					
121-1		3.5			3.53	5.48	3.52	*0.030*	*1.980*	*0.020*					
121-2		3.5			3.55	3.52	3.50	*0.050*	*0.020*	*0.000*					
121-3		3.5			3.53	5.48	3.52	*0.030*	*1.980*	*0.020*					
121-4		3.5			3.49	3.46	3.48	*-0.010*	*-0.040*	*-0.020*					
121-5		3.5			3.53	5.48	3.52	*0.030*	*1.980*	*0.020*					
121-6		3.5			3.52	3.50	3.54	*0.020*	*0.000*	*0.040*					
122-1		M3			OK	OK	OK								
122-2		M3			OK	OK	OK								
122-3		M3			OK	OK	OK								
122-4		M3			OK	OK	OK								
122-5		M3			OK	OK	OK								
122-6		M3			OK	OK	OK								
123-1		4.5	0.1	0.1	4.52	4.51	4.53	*0.020*	*0.010*	*0.030*	0%	-10%			
123-2		4.5	0.1	0.1	4.48	4.49	4.52	*-0.020*	*-0.010*	*0.020*	0%	20%			
123-3		4.5	0.1	0.1	4.46	4.51	4.50	*-0.040*	*0.010*	*0.000*	0%	40%			
123-4		4.5	0.1	0.1	4.52	4.51	4.53	*0.020*	*0.010*	*0.030*	0%	-10%			
123-5		4.5	0.1	0.1	4.48	4.49	4.52	*-0.020*	*-0.010*	*0.020*	0%	20%			
123-6		4.5	0.1	0.1	4.52	4.51	4.53	*0.020*	*0.010*	*0.030*	0%	-10%			
124-1		9			9.02	9.06	8.95	*0.020*	*0.060*	*-0.050*					
124-2		9			9.06	8.94	8.91	*0.060*	*-0.060*	*-0.090*					
124-3		9			9.03	9.00	9.05	*0.030*	*0.000*	*0.050*					

夏煜有限公司
安徽将煜电子科技有限公司
FAI量測報告

客戶:	钰纬	品名:	MAIN BRACKET	版次:	A	日期:	2025.12.10
機種:	VM15	料號:	3MD695D1010	材質:	ADC12	量測人員:	谢小琴

圖 面 尺 寸					量測結果						量測分析				備註
					量測數值			誤差值			% Tolerance		Acc/Rej		
項目	註解	規格	+TOL	-TOL	1	2	3	1	2	3	較高	較低	高	低	
124-4		9			8.95	9.00	9.02	*-0.050*	*0.000*	*0.020*					
124-5		9			8.94	8.94	8.93	*-0.060*	*-0.064*	*-0.070*					
124-6		9			9.00	9.02	9.06	*0.000*	*0.020*	*0.060*					
125-1		6			6.14	6.10	6.05	*0.140*	*0.100*	*0.050*					
125-2		6			6.08	6.06	6.08	*0.080*	*0.060*	*0.080*					
125-3		6			6.06	6.03	6.08	*0.060*	*0.030*	*0.080*					
125-4		6			6.05	6.00	6.04	*0.050*	*0.000*	*0.040*					
125-5		6			6.14	6.10	6.05	*0.140*	*0.100*	*0.050*					
125-6		6			6.08	6.06	6.08	*0.080*	*0.060*	*0.080*					
126-1		5	0.1	0	5.06	5.05	5.02	*0.060*	*0.050*	*0.020*	0%				
126-2		5	0.1	0	5.08	5.05	5.03	*0.080*	*0.050*	*0.030*	0%				
126-3		5	0.1	0	5.08	5.00	5.03	*0.080*	*0.000*	*0.030*	0%				
126-4		5	0.1	0	5.01	5.06	5.04	*0.010*	*0.060*	*0.040*	0%				
126-5		5	0.1	0	5.06	5.08	5.03	*0.060*	*0.080*	*0.030*	0%				
126-6		5	0.1	0	5.07	5.04	5.05	*0.070*	*0.040*	*0.050*	0%				
127		4.5			4.55	4.48	4.52	*0.050*	*-0.020*	*0.020*					
128		M4			OK	OK	OK								
129		1	0.5	0	1.10	1.12	1.15	*0.100*	*0.120*	*0.150*	0%				
130		9			9.14	9.10	9.12	*0.140*	*0.100*	*0.120*					
131		8			8.09	8.05	8.08	*0.090*	*0.050*	*0.080*					
132		14.5			14.61	14.60	14.59	*0.110*	*0.100*	*0.090*					
133-1		8			8.15	8.10	8.08	*0.150*	*0.100*	*0.080*					
133-2		8			8.12	8.11	8.09	*0.120*	*0.110*	*0.090*					
133-3		8			8.09	8.08	8.06	*0.090*	*0.080*	*0.060*					
133-4		8			8.10	8.12	8.09	*0.100*	*0.120*	*0.090*					
134-1		1	0.5	0	1.00	1.16	1.06	*0.000*	*0.160*	*0.060*	0%				
134-2		1	0.5	0	1.16	1.12	1.17	*0.160*	*0.120*	*0.170*	0%				
134-3		1	0.5	0	1.10	1.12	1.08	*0.100*	*0.120*	*0.080*	0%				
134-4		1	0.5	0	1.14	1.20	1.16	*0.140*	*0.200*	*0.160*	0%				
135-1		M4			OK	OK	OK								
135-2		M4			OK	OK	OK								
135-3		M4			OK	OK	OK								
135-4		M4			OK	OK	OK								
136-1		4.5			4.55	4.41	4.48	*0.050*	*-0.090*	*-0.020*					
136-2		4.5			4.44	4.46	4.42	*-0.060*	*-0.040*	*-0.080*					
136-3		4.5			4.59	4.58	4.51	*0.090*	*0.080*	*0.010*					

夏煜有限公司
安徽将煜电子科技有限公司
FAI量测報告

客戶:	钰纬	品名:	MAIN BRACKET	版次:	A	日期:	2025.12.10
機種:	VM15	料號:	3MD695D1010	材質:	ADC12	量測人員:	谢小琴

圖 面 尺 寸					量測結果						量測分析				備註
					量測數值			誤差值			% Tolerance		Acc/Rej		
項目	註解	規格	+TOL	-TOL	1	2	3	1	2	3	較高	較低	高	低	
136-4		4.5			4.57	4.52	4.56	*0.070*	*0.020*	*0.060*					
137		17.7			17.76	16.94	16.98	*0.060*	*-0.760*	*-0.720*					
138		75	0.3	0.3	75.12	75.10	75.06	*0.120*	*0.100*	*0.060*	0%	-20%			
139		75	0.3	0.3	75.09	75.08	75.03	*0.090*	*0.080*	*0.030*	0%	-10%			
140		98	0.3	0.3	98.05	97.94	97.92	*0.050*	*-0.060*	*-0.080*	0%	27%			
141		49	0.3	0.3	49.03	48.95	48.91	*0.030*	*-0.050*	*-0.090*	0%	30%			
142		42			42.05	42.06	42.07	*0.050*	*0.060*	*0.070*					
143		273.88	1	1	273.51	273.41	274.26	*-0.370*	*-0.470*	*0.380*	0%	47%			
144		509.56	1	1	509.04	510.16	510.17	*-0.520*	*0.600*	*0.610*	0%	52%			
145-1		5	1.5	1.5	5.81	4.91	5.49	*0.810*	*-0.090*	*0.490*	0%	6%			
145-2		5	1.5	1.5	5.26	5.51	5.56	*0.260*	*0.510*	*0.560*	0%	-17%			
145-3		5	1.5	1.5	5.19	4.92	5.47	*0.190*	*-0.080*	*0.470*	0%	5%			
146-1		1.6	0.2	0.5	1.75	1.49	1.56	*0.150*	*-0.110*	*-0.040*	0%	22%			
146-2		1.6	0.2	0.5	1.44	1.51	1.74	*-0.160*	*-0.090*	*0.140*	0%	32%			
146-3		1.6	0.2	0.5	1.62	1.78	1.79	*0.020*	*0.180*	*0.190*	0%	-4%			
147-1		2			2.08	2.05	2.03	*0.080*	*0.050*	*0.030*					
147-2		2			2.06	2.09	2.05	*0.060*	*0.090*	*0.050*					
147-3		2			2.06	2.03	2.08	*0.060*	*0.030*	*0.080*					
148		2.5			2.51	2.55	2.56	*0.010*	*0.050*	*0.060*					
149		0.2	0	0.2	0.15	0.10	0.12	*-0.050*	*-0.100*	*-0.080*		50%			
150		0.2	0	0.2	0.08	0.15	0.15	*-0.120*	*-0.050*	*-0.050*		60%			

昆山超群金属制品有限公司

铸造铝合金锭质量保证书

报告编号：01

品名	铝合金锭	牌号	ADC12	炉号	251822	出厂日期：2025-12-24

化　学　成　分　含　量　%

元素	硅	铁	铜	锰	镁	锌	钛	镍	铅	锡	铬	磷	汞	溴	镉	铝
	Si	Fe	Cu	Mn	Mg	Zn	Ti	Ni	Pb	Sn	Cr	P	Hg	Br	Cd	Al
JIS H5302-2006	9.6-12	≤1.3	1.5-3.5	≤0.5	≤0.3	≤1	≤0.3	≤0.5	≤0.2	≤0.2						
实测结果	10.82	0.738	1.69	0.232	0.238	0.844	0.0481	0.0686	0.0221	0.0102	0.0532	0.0002	0.0001	0.001	0.001	85.1

物理性能及其他检测

项目	外观检验	断口检验	针孔检验
技术要求	铝锭表面应整洁，不得有霉斑、熔渣及外来夹杂物，但允许有修整痕迹	断口应致密，不允许有熔渣及夹杂物。铝锭断口宏观晶粒应不超过《铝锭断口检查标准书》规定的二级	针孔度级别应不低于JB/T7946.3-1999标准的三级。（不包括疏松和缩孔）。
检验结果	表面符合以上技术要求	断口组织致密，未见异常缺陷	二级
结论	合格	合格	合格
备注			

1.本产品经检验符合　技术协议　标准，准予出厂。

注：2.如对本产品有异议者自产品出厂起一个月内提出，逾期不予受理。

厂章：　　签发人：　许浩

厂址：昆山市张浦镇俱进路888号内
电话：0512-50335158

检测报告

编号：SHAEC25003073002　　**日期：**2025 年 02 月 25 日　　

客户名称：　昆山市超群金属制品有限公司

客户地址：　江苏省昆山市张浦镇俱进路 890 号 2 号房-7 号房

样品名称：　ADC12

型号：　ADC12

料号：　ADC12

以上样品及信息由客户提供。

SGS 工作编号：　SHP25-003970

样品接收时间：　2025 年 02 月 19 日

检测周期：　2025 年 02 月 19 日 ~ 2025 年 02 月 25 日

检测要求：　根据客户要求检测。

检测方法：　见后续页。

检测结果：　见后续页。

检测要求	结论
欧盟 RoHS 指令 2011/65/EU 附录 II 的修正指令(EU) 2015/863-铅、汞、镉、六价铬、多溴联苯 (PBB)、多溴二苯醚 (PBDE)、邻苯二甲酸二(2-乙基已基)酯 (DEHP)、邻苯二甲酸丁苄酯 (BBP)、邻苯二甲酸二丁酯 (DBP)和邻苯二甲酸二异丁酯 (DIBP)	符合
元素	见检测结果

通标标准技术服务（上海）有限公司

授权签名

盛雯舒

Sue Sheng 盛雯舒

批准签署人

Scan to see the report

DFB81DCC

Unless otherwise agreed in writing, this document is issued by the Company subject to its General Conditions of Service printed overleaf, available on request or accessible at https://www.sgs.com/en/Terms-and-Conditions. Attention is drawn to the limitation of liability, indemnification and jurisdiction issues defined therein. Any holder of this document is advised that information contained hereon reflects the Company's findings at the time of its intervention only and within the limits of Client's instructions, if any. The Company's sole responsibility is to its Client and this document does not exonerate parties to a transaction from exercising all their rights and obligations under the transaction documents. This document cannot be reproduced except in full, without prior written approval of the Company. Any unauthorized alteration, forgery or falsification of the content or appearance of this document is unlawful and offenders may be prosecuted to the fullest extent of the law. Unless otherwise stated the results shown in this test report refer only to the sample(s) tested.
Attention: To check the authenticity of testing /inspection report & certificate, please contact us at telephone: (86-755) 8307 1443, or email: CN.Doccheck@sgs.com

3rd Building,No.889 Yishan Road Xuhui District,Shanghai China 200233　t E&E (86-21) 61402553　f E&E (86-21)64953679　www.sgsgroup.com.cn
中国·上海·徐汇区宜山路889号3号楼　邮编: 200233　t HL (86-21) 61402594　f HL (86-21)61156899　sgs.china@sgs.com

Member of the SGS Group (SGS SA)

检测结果：

检测部件外观描述:

样品序号	样品编号	SGS 样品 ID	样品描述
SN1	A1	SHA25-0030730-0001.C001	银色金属

备注：

(1) 1 mg/kg = 1 ppm = 0.0001%
(2) MDL= 方法检出限
(3) ND = 未检出(< MDL)
(4) "-" = 未规定

欧盟 RoHS 指令 2011/65/EU 附录 II 的修正指令(EU) 2015/863-铅、汞、镉、六价铬、多溴联苯 (PBB)、多溴二苯醚 (PBDE)、邻苯二甲酸二(2-乙基己基)酯 (DEHP)、邻苯二甲酸丁苄酯 (BBP)、邻苯二甲酸二丁酯 (DBP)和邻苯二甲酸二异丁酯 (DIBP)

检测方法： 参考 IEC 62321-4:2013+AMD1:2017，IEC 62321-5:2013， IEC 62321-7-1:2015 和 IEC 62321-12:2023，采用 ICP-OES/AAS，UV-Vis 和 GC-MS 进行分析。

检测项目	限值	单位	MDL	A1
铅 (Pb)	1000	mg/kg	2	95
汞 (Hg)	1000	mg/kg	2	ND
镉 (Cd)	100	mg/kg	2	ND
六价铬 (Cr(VI))▼	-	μg/cm²	0.10	ND
多溴联苯之和 (PBB)	1000	mg/kg	-	ND
一溴联苯 (MonoBB)	-	mg/kg	25	ND
二溴联苯 (DiBB)	-	mg/kg	25	ND
三溴联苯 (TriBB)	-	mg/kg	25	ND
四溴联苯 (TetraBB)	-	mg/kg	25	ND
五溴联苯 (PentaBB)	-	mg/kg	25	ND
六溴联苯 (HexaBB)	-	mg/kg	25	ND
七溴联苯 (HeptaBB)	-	mg/kg	25	ND
八溴联苯 (OctaBB)	-	mg/kg	25	ND
九溴联苯 (NonaBB)	-	mg/kg	25	ND
十溴联苯 (DecaBB)	-	mg/kg	25	ND
多溴二苯醚之和 (PBDE)	1000	mg/kg	-	ND
一溴二苯醚 (MonoBDE)	-	mg/kg	25	ND
二溴二苯醚 (DiBDE)	-	mg/kg	25	ND
三溴二苯醚 (TriBDE)	-	mg/kg	25	ND
四溴二苯醚 (TetraBDE)	-	mg/kg	25	ND
五溴二苯醚 (PentaBDE)	-	mg/kg	25	ND
六溴二苯醚 (HexaBDE)	-	mg/kg	25	ND
七溴二苯醚 (HeptaBDE)	-	mg/kg	25	ND
八溴二苯醚 (OctaBDE)	-	mg/kg	25	ND

检验检测专用章 Inspection & Testing Services
SGS-CSTC Standards Technical Services (Shanghai) Co., Ltd. Chemical Laboratory

Unless otherwise agreed in writing, this document is issued by the Company subject to its General Conditions of Service printed overleaf, available on request or accessible at https://www.sgs.com/en/Terms-and-Conditions. Attention is drawn to the limitation of liability, indemnification and jurisdiction issues defined therein. Any holder of this document is advised that information contained hereon reflects the Company's findings at the time of its intervention only and within the limits of Client's instructions, if any. The Company's sole responsibility is to its Client and this document does not exonerate parties to a transaction from exercising all their rights and obligations under the transaction documents. This document cannot be reproduced except in full, without prior written approval of the Company. Any unauthorized alteration, forgery or falsification of the content or appearance of this document is unlawful and offenders may be prosecuted to the fullest extent of the law. Unless otherwise stated the results shown in this test report refer only to the sample(s) tested.
Attention: To check the authenticity of testing /inspection report & certificate, please contact us at telephone: (86-755) 8307 1443, or email: CN.Doccheck@sgs.com

3rd Building,No.889 Yishan Road Xuhui District,Shanghai China 200233 t E&E (86-21) 61402553 f E&E (86-21)64953679 www.sgsgroup.com.cn
中国·上海·徐汇区宜山路889号3号楼 邮编: 200233 t HL (86-21) 61402594 f HL (86-21)61156899 sgs.china@sgs.com

Member of the SGS Group (SGS SA)

检测项目	限值	单位	MDL	A1
九溴二苯醚 (NonaBDE)	-	mg/kg	25	ND
十溴二苯醚 (DecaBDE)	-	mg/kg	25	ND
邻苯二甲酸二(2-乙基己基)酯 (DEHP)	1000	mg/kg	50	ND
邻苯二甲酸丁苄酯 (BBP)	1000	mg/kg	50	ND
邻苯二甲酸二丁酯 (DBP)	1000	mg/kg	50	ND
邻苯二甲酸二异丁酯 (DIBP)	1000	mg/kg	50	ND

备注：

(1) 最大允许极限值引用自RoHS指令(EU) 2015/863。

(2) IEC 62321系列等同于 EN 62321系列。

(3) ▼ = a. 当六价铬的浓度高于0.13 μg/cm²时，样品为阳性，即含有六价铬；

b. 当六价铬的浓度为ND (低于0.10 μg/cm²) 时，样品为阴性，即未检测到六价铬；

c. 当六价铬的浓度介于0.10 μg/cm²与0.13 μg/cm²之间时，无法直接判定是否检测到六价铬，因不同个体的样品表面差异可能会影响测定结果。

由于未获知样品的存储条件和生产日期，样品的六价铬检测结果仅能代表检测时样品含六价铬的状态。

元素

检测方法： 参考 US EPA 3050B:1996，采用 ICP-OES/AAS 进行分析。

检测项目	单位	MDL	A1
铍(Be)	mg/kg	5	ND

除非另有说明，参照 ILAC-G8:09/2019，使用简单接受（*w*=0）的二元判定规则进行符合性判定。

除非另有说明，此报告结果仅对检测的样品负责。本报告未经本公司书面许可，不可部分复制。
检测报告仅用于客户科研、教学、内部质量控制、产品研发等目的，仅供内部参考。

检验检测专用章 Inspection & Testing Services
SGS-CSTC Standards Technical Services (Shanghai) Co., Ltd. Chemical Laboratory

Unless otherwise agreed in writing, this document is issued by the Company subject to its General Conditions of Service printed overleaf, available on request or accessible at https://www.sgs.com/en/Terms-and-Conditions. Attention is drawn to the limitation of liability, indemnification and jurisdiction issues defined therein. Any holder of this document is advised that information contained hereon reflects the Company's findings at the time of its intervention only and within the limits of Client's instructions, if any. The Company's sole responsibility is to its Client and this document does not exonerate parties to a transaction from exercising all their rights and obligations under the transaction documents. This document cannot be reproduced except in full, without prior written approval of the Company. Any unauthorized alteration, forgery or falsification of the content or appearance of this document is unlawful and offenders may be prosecuted to the fullest extent of the law. Unless otherwise stated the results shown in this test report refer only to the sample(s) tested.
Attention: To check the authenticity of testing /inspection report & certificate, please contact us at telephone: (86-755) 8307 1443, or email: CN.Doccheck@sgs.com

3rd Building,No.889 Yishan Road Xuhui District,Shanghai China 200233 t E&E (86-21) 61402553 f E&E (86-21)64953679 www.sgsgroup.com.cn
中国·上海·徐汇区宜山路889号3号楼 邮编: 200233 t HL (86-21) 61402594 f HL (86-21)61156899 sgs.china@sgs.com

Member of the SGS Group (SGS SA)

附件

元素检测流程图

样品按照下述流程被完全消解

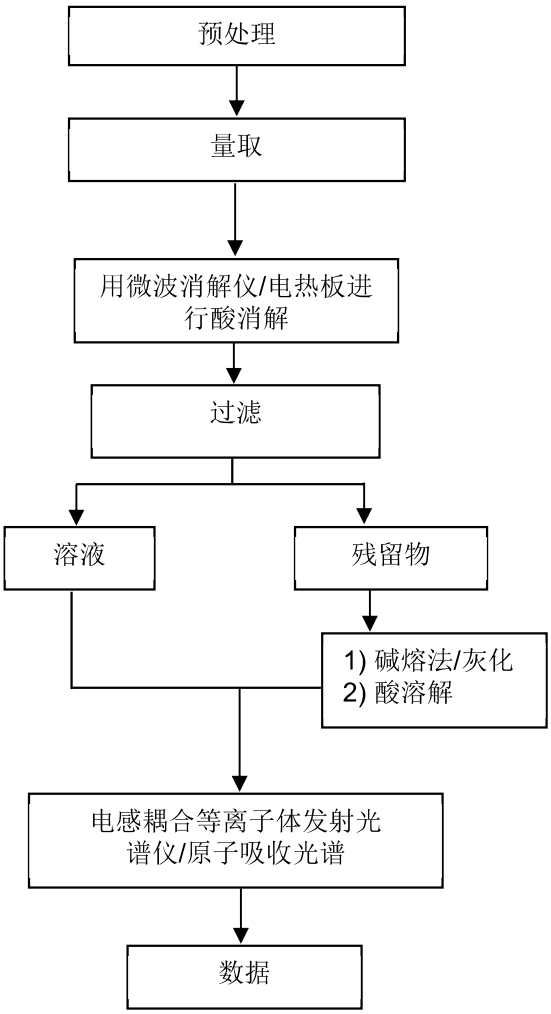

检验检测专用章 Inspection & Testing Services
SGS-CSTC Standards Technical Services (Shanghai) Co., Ltd. Chemical Laboratory

Unless otherwise agreed in writing, this document is issued by the Company subject to its General Conditions of Service printed overleaf, available on request or accessible at https://www.sgs.com/en/Terms-and-Conditions. Attention is drawn to the limitation of liability, indemnification and jurisdiction issues defined therein. Any holder of this document is advised that information contained hereon reflects the Company's findings at the time of its intervention only and within the limits of Client's instructions, if any. The Company's sole responsibility is to its Client and this document does not exonerate parties to a transaction from exercising all their rights and obligations under the transaction documents. This document cannot be reproduced except in full, without prior written approval of the Company. Any unauthorized alteration, forgery or falsification of the content or appearance of this document is unlawful and offenders may be prosecuted to the fullest extent of the law. Unless otherwise stated the results shown in this test report refer only to the sample(s) tested.
Attention: To check the authenticity of testing /inspection report & certificate, please contact us at telephone: (86-755) 8307 1443, or email: CN.Doccheck@sgs.com

3rd Building,No.889 Yishan Road Xuhui District,Shanghai China 200233 t E&E (86-21) 61402553 f E&E (86-21)64953679 www.sgsgroup.com.cn
中国·上海·徐汇区宜山路889号3号楼 邮编: 200233 t HL (86-21) 61402594 f HL (86-21)61156899 sgs.china@sgs.com

Member of the SGS Group (SGS SA)

附件

六价铬检测流程图

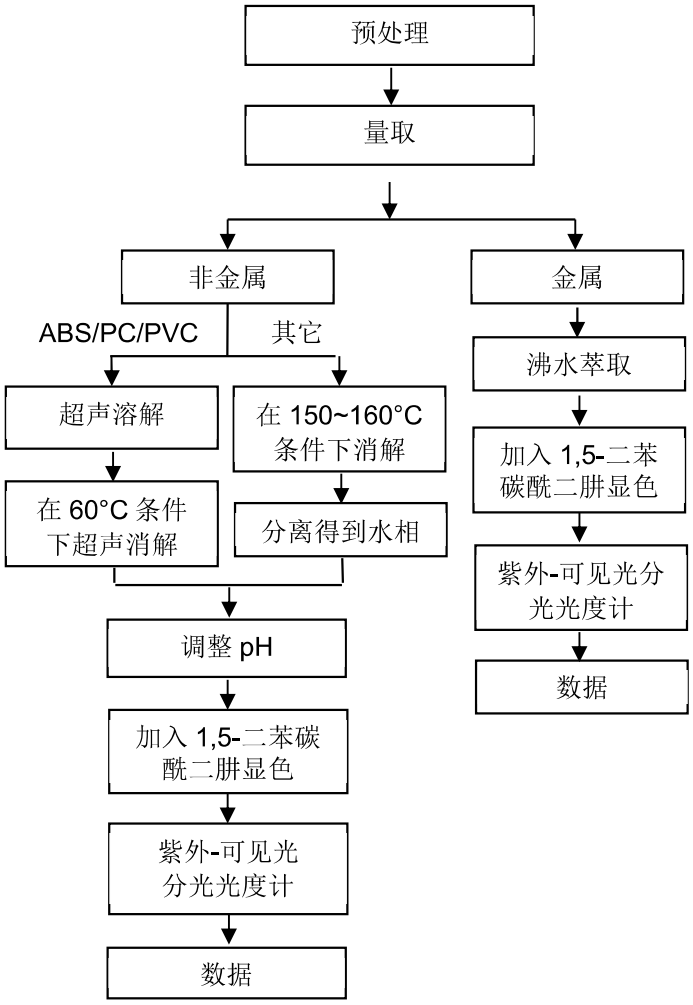

检验检测专用章 Inspection & Testing Services
SGS-CSTC Standards Technical Services (Shanghai) Co., Ltd. Chemical Laboratory

Unless otherwise agreed in writing, this document is issued by the Company subject to its General Conditions of Service printed overleaf, available on request or accessible at https://www.sgs.com/en/Terms-and-Conditions. Attention is drawn to the limitation of liability, indemnification and jurisdiction issues defined therein. Any holder of this document is advised that information contained hereon reflects the Company's findings at the time of its intervention only and within the limits of Client's instructions, if any. The Company's sole responsibility is to its Client and this document does not exonerate parties to a transaction from exercising all their rights and obligations under the transaction documents. This document cannot be reproduced except in full, without prior written approval of the Company. Any unauthorized alteration, forgery or falsification of the content or appearance of this document is unlawful and offenders may be prosecuted to the fullest extent of the law. Unless otherwise stated the results shown in this test report refer only to the sample(s) tested.
Attention: To check the authenticity of testing /inspection report & certificate, please contact us at telephone: (86-755) 8307 1443, or email: CN.Doccheck@sgs.com

3rd Building,No.889 Yishan Road Xuhui District,Shanghai China 200233 t E&E (86-21) 61402553 f E&E (86-21)64953679 www.sgsgroup.com.cn
中国·上海·徐汇区宜山路889号3号楼 邮编: 200233 t HL (86-21) 61402594 f HL (86-21)61156899 sgs.china@sgs.com

Member of the SGS Group (SGS SA)

附件

PBB/PBDE/Phthalates 检测流程图

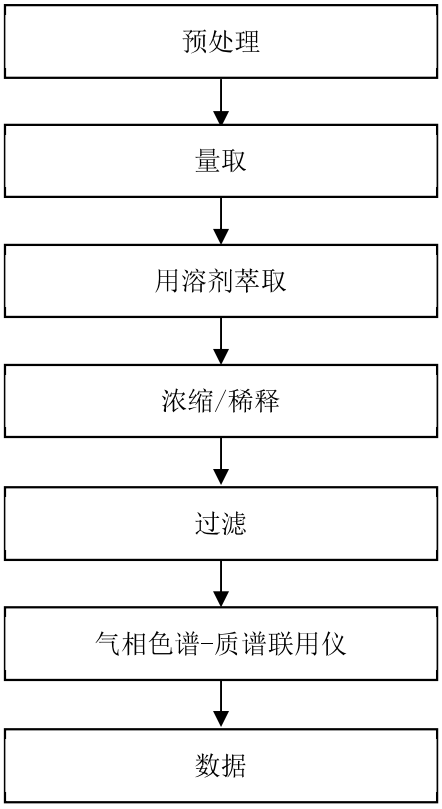

Unless otherwise agreed in writing, this document is issued by the Company subject to its General Conditions of Service printed overleaf, available on request or accessible at https://www.sgs.com/en/Terms-and-Conditions. Attention is drawn to the limitation of liability, indemnification and jurisdiction issues defined therein. Any holder of this document is advised that information contained hereon reflects the Company's findings at the time of its intervention only and within the limits of Client's instructions, if any. The Company's sole responsibility is to its Client and this document does not exonerate parties to a transaction from exercising all their rights and obligations under the transaction documents. This document cannot be reproduced except in full, without prior written approval of the Company. Any unauthorized alteration, forgery or falsification of the content or appearance of this document is unlawful and offenders may be prosecuted to the fullest extent of the law. Unless otherwise stated the results shown in this test report refer only to the sample(s) tested.
Attention: To check the authenticity of testing /inspection report & certificate, please contact us at telephone: (86-755) 8307 1443, or email: CN.Doccheck@sgs.com

SGS-CSTC Standards Technical Services (Shanghai) Co., Ltd. Chemical Laboratory
3rd Building,No.889 Yishan Road Xuhui District,Shanghai China 200233
中国·上海·徐汇区宜山路889号3号楼 邮编: 200233
t E&E (86-21) 61402553 f E&E (86-21)64953679 www.sgsgroup.com.cn
t HL (86-21) 61402594 f HL (86-21)61156899 sgs.china@sgs.com

Member of the SGS Group (SGS SA)

附件

元素检测流程图

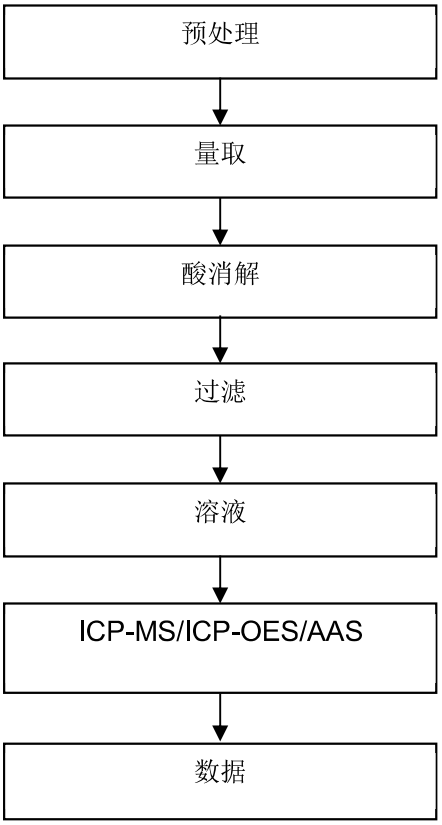

Unless otherwise agreed in writing, this document is issued by the Company subject to its General Conditions of Service printed overleaf, available on request or accessible at https://www.sgs.com/en/Terms-and-Conditions. Attention is drawn to the limitation of liability, indemnification and jurisdiction issues defined therein. Any holder of this document is advised that information contained hereon reflects the Company's findings at the time of its intervention only and within the limits of Client's instructions, if any. The Company's sole responsibility is to its Client and this document does not exonerate parties to a transaction from exercising all their rights and obligations under the transaction documents. This document cannot be reproduced except in full, without prior written approval of the Company. Any unauthorized alteration, forgery or falsification of the content or appearance of this document is unlawful and offenders may be prosecuted to the fullest extent of the law. Unless otherwise stated the results shown in this test report refer only to the sample(s) tested.
Attention: To check the authenticity of testing /inspection report & certificate, please contact us at telephone: (86-755) 8307 1443, or email: CN.Doccheck@sgs.com

3rd Building,No.889 Yishan Road Xuhui District,Shanghai China 200233 t E&E (86-21) 61402553 f E&E (86-21)64953679 www.sgsgroup.com.cn
中国·上海·徐汇区宜山路889号3号楼 邮编: 200233 t HL (86-21) 61402594 f HL (86-21)61156899 sgs.china@sgs.com

Member of the SGS Group (SGS SA)

样品照片：



SHA25-0030730-0001.C001

此照片仅限于随 SGS 正本报告使用

报告结束

Unless otherwise agreed in writing, this document is issued by the Company subject to its General Conditions of Service printed overleaf, available on request or accessible at https://www.sgs.com/en/Terms-and-Conditions. Attention is drawn to the limitation of liability, indemnification and jurisdiction issues defined therein. Any holder of this document is advised that information contained hereon reflects the Company's findings at the time of its intervention only and within the limits of Client's instructions, if any. The Company's sole responsibility is to its Client and this document does not exonerate parties to a transaction from exercising all their rights and obligations under the transaction documents. This document cannot be reproduced except in full, without prior written approval of the Company. Any unauthorized alteration, forgery or falsification of the content or appearance of this document is unlawful and offenders may be prosecuted to the fullest extent of the law. Unless otherwise stated the results shown in this test report refer only to the sample(s) tested.
Attention: To check the authenticity of testing /inspection report & certificate, please contact us at telephone: (86-755) 8307 1443, or email: CN.Doccheck@sgs.com

SGS-CSTC Standards Technical Services (Shanghai) Co., Ltd. Chemical Laboratory
3rd Building,No.889 Yishan Road Xuhui District,Shanghai China 200233
中国·上海·徐汇区宜山路889号3号楼 邮编: 200233
t E&E (86-21) 61402553 f E&E (86-21)64953679 www.sgsgroup.com.cn
t HL (86-21) 61402594 f HL (86-21)61156899 sgs.china@sgs.com

Member of the SGS Group (SGS SA)