
2026.03.2


3MD695P101

勇發塑膠股份有限公司

地址:桃園市龜山區萬壽路二段 342 巷 3 號
電話: (03)319-2299

零件承認書

SPECIFICATION FOR APPROVAL

設計驗證
工程課
2026 -03- 30
發行
鈺緯科技開發股份有限公司

公司名稱 COMPANY	鈺緯科技開發股份有限公司
品名 PART NAME	front_bezel
料號 PART NO	3MD695P1010 (M3529)

勇發塑膠股份有限公司
115. 2. 23
收發章

黃 燁	高全財	林雅芬
（工程部主管）	（業務部主管）	（承辦人員）

日期(DATE): 2 月(MONTH): 10 日(DAY): 115 年(YEAR)

REV	DATE	DESCRIPTION	DRAFT	APPROVED
0	2025-07-01	INITIAL RELEASE	LASLIE	
1	2025-08-21	MODIFY FOR TOOLING DESIGN	LASLIE	
A	2025-10-01	PRODUCTION RELEASE	LASLIE	FERRIS

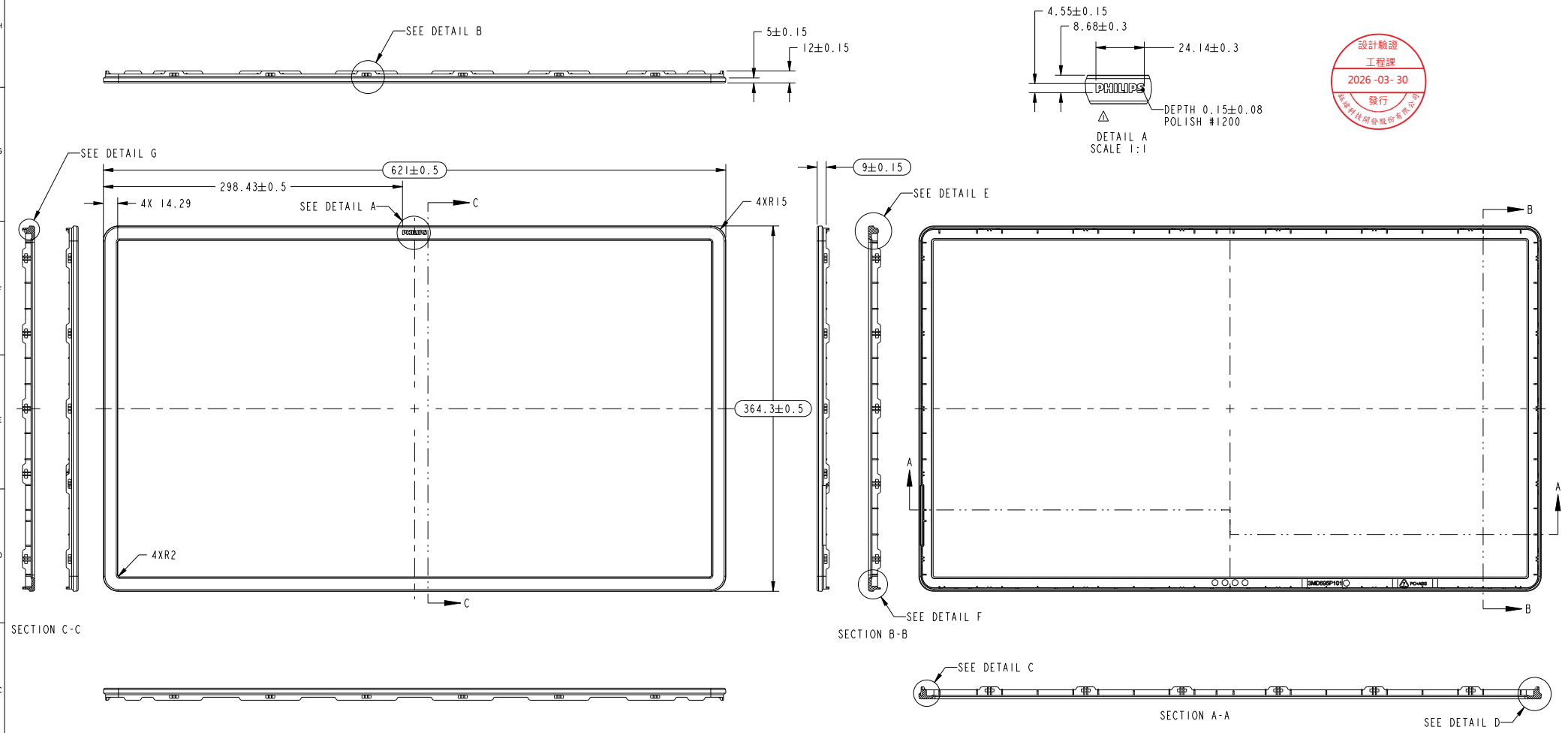

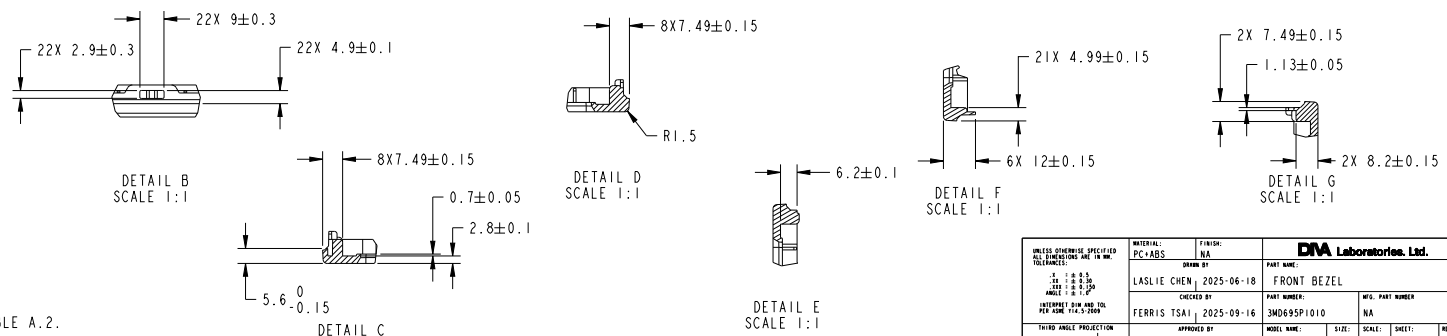

NOTE:
1. RESIN MATERIAL: PC+ABS, BAYBLEND FR3010.
2. RESIN COLOR: BLACK-80007.
3. FINISH COLOR: BLACK-80007.
4. TEXTUER: MT-11010.
5. GENERALLY THICKNESS: 2.8
6. NO FLASH OR BURRS ALLOWED.
7. NON-DIMENSIONED GEOMETRY: SEE 3D FILE.
8. WARPAGE AND FLATNESS TOLERANCE : <8.0
9. COSMETICAL REQUIREMENTS ACCORDING TO PHILIPS STANDARD 9060-0488 G,TABLE A.2.
10. PACKING : EPE FOAM BAG.
11. RoHS COMPLIANT.

設計驗證
工程課
2026-03-30
發行
益達科技開發股份有限公司

UNLESS OTHERWISE SPECIFIED ALL DIMENSIONS ARE IN MM. TOLERANCES: .X ± 0.5 .XX ± 0.30 .XXX ± 0.150 ANGLE ± 1.0° INTERPRET DIM AND TOL PER ASME Y14.5-2009	MATERIAL: PC+ABS	FINISH: NA	DNA Laboratories, Ltd.
	DRAWN BY: LASLIE CHEN 2025-06-18		PART NAME: FRONT BEZEL
	CHECKED BY: FERRIS TSAI 2025-09-16		PART NUMBER: 3MD695P1010 / MFG. PART NUMBER: NA
THIRD ANGLE PROJECTION	APPROVED BY: LASLIE CHEN 2025-12-11		MODEL NAME: VM15 / SIZE: A1 / SCALE: 1:2 / SHEET: 1 OF 1 / REV: A
	FILE NAME: A27.216.FRONT.BEZEL.DWG	APPROVED NO.: (M3529)	THIS DOCUMENT IS SUPPLIED IN CONFIDENCE. NO REPRODUCTION OF THIS DOCUMENT IN PART OR IN WHOLE OR THEREOF OF THE ITEMS SHOWN MAY BE MADE WITHOUT THE COPYRIGHT OWNERS WRITTEN PERMISSION.

TOOLING NO. 3MD695P1000

ASME STANDARD,MM

Test Result	

DIVA FAI DATA SHEET

Part Number :	3MD695P1010	Supplier :	勇發塑膠	Date:	115/2/10
Part Description :	FRONT BEZEL			Cavity / Tool # :	
Revision :		Material Spec:	PC/ABS	Inspector:	葉汶諺

MOI-Method of inspection abbreviation: HG = Height gauge, MIC = Micrometer, DC = Dial Caliper, P = Protractor, OC = Optical Comparator, CG = Checking Gauge, CMM = Coordinate Measuring I
OMM = Optical Coordinate Measuring Machine, HT = Hardness Trester, TG = Thickness Gauge, VIS = Visual, PG = Plug Gauge,
OTHER:

DRAWING SPECIFICATIONS						INSPECTION RESULTS							INSPECTION ANALYSIS				
						Sample Number							% Tolerance		Alert/Rej		Supplier
ITEM	LOCATION	NOMINAL	+TOL	-TOL	Method	1	2	3	1	2	3	Mean	UPPER	LOWER	HIGH	LOW	Remarks
1	H4	5.000	0.15	0.15		5.050	5.060	4.990	0.050	0.060	-0.010	5.033	40%	7%			
2	H4	12.000	0.50	0.50		12.290	12.200	12.210	0.290	0.200	0.210	12.233	58%	0%			
3	H6	4.550	0.30	0.30		4.380	4.480	4.400	-0.170	-0.070	-0.150	4.420	0%	57%			
4	H6	8.680	0.30	0.30		8.450	8.520	8.400	-0.230	-0.160	-0.280	8.457	0%	93%		Alert	
5	H6	24.140	0.30	0.30		23.900	24.030	24.080	-0.240	-0.110	-0.060	24.003	0%	80%		Alert	
6	H6	621.000	0.50	0.50		620.750	620.550	620.560	-0.250	-0.450	-0.440	620.620	0%	90%		Alert	
7	G1	14.290	0.30	0.30		14.270	14.320	14.370	-0.020	0.030	0.080	14.320	27%	7%			
8	E4	364.300	0.50	0.50		364.100	363.950	364.160	-0.200	-0.350	-0.140	364.070	0%	70%		Alert	
9	G5	9.000	0.15	0.15		8.990	9.040	9.010	-0.010	0.040	0.010	9.013	27%	7%			
10	B3	5.000	0.05	0.05		5.030	5.040	5.030	0.030	0.040	0.030	5.033	80%	0%	Alert		
11	B4	7.490	0.15	0.15		7.420	7.500	7.480	-0.070	0.010	-0.010	7.467	7%	47%			
12	A3	5.600	0.50	0.50		5.750	5.610	5.620	0.150	0.010	0.020	5.660	30%	0%			
13	A4	0.700	0.05	0.05		無法量測	無法量測	無法量測									
14	A4	2.800	0.30	0.30		無法量測	無法量測	無法量測									
15	B5	7.490	0.15	0.15		7.550	7.530	7.480	0.060	0.040	-0.010	7.520	40%	7%			
16	A6	9.800	0.30	0.30		9.950	9.690	9.760	0.150	-0.110	-0.040	9.800	50%	37%			

Instructions:
1.Inspector mest fillout the yellow area.
2. The table will automatically calculate the data in green area.

Test Result	

DIVA FAI DATA SHEET

Part Number :	3MD695P1010	Supplier :	勇發塑膠	Date:	115/2/10
Part Description :	FRONT BEZEL			Cavity / Tool # :	
Revision :		Material Spec:	PC/ABS	Inspector:	

MOI-Method of inspection abbreviation: HG = Height gauge, MIC = Micrometer, DC = Dial Caliper, P = Protractor, OC = Optical Comparator, CG = Checking Gauge, CMM = Coordinate Measuring I
OMM = Optical Coordinate Measuring Machine, HT = Hardness Trester, TG = Thickness Gauge, VIS = D
OTHER:

DRAWING SPECIFICATIONS						INSPECTION RESULTS							INSPECTION ANALYSIS				
						Sample Number							% Tolerance		Alert/Rej		Supplier
ITEM	LOCATION	NOMINAL	+TOL	-TOL	Method	1	2	3	1	2	3	Mean	UPPER	LOWER	HIGH	LOW	Remarks
17	A6	6.200	0.10	0.10		6.190	6.260	6.250	-0.010	0.060	0.050	6.233	60%	10%			
18	B7	8.800	0.50	0.50		8.860	8.980	8.860	0.060	0.180	0.060	8.900	36%	0%			
19	B7	2.800	0.00	0.10		2.780	2.760	2.840	-0.020	-0.040	0.040	2.793		40%			
20	A7	4.990	0.30	0.30		無法量測	無法量測	無法量測									
21	A7	9.200	0.10	0.10		9.250	9.220	9.260	0.050	0.020	0.060	9.243	60%	0%			
22	B8	7.490	0.15	0.15		7.470	7.520	7.560	-0.020	0.030	0.070	7.517	47%	13%			
23	B8	1.130	0.05	0.05		1.120	1.140	1.120	-0.010	0.010	-0.010	1.127	20%	20%			
24	B8	8.200	0.50	0.50		無法量測	無法量測	無法量測									
25	B3	5.000	0.05	0.05		4.980	4.980	4.990	-0.020	-0.020	-0.010	4.983	0%	40%			
26	G2	298.430	0.50	0.50		298.290	298.320	298.300	-0.140	-0.110	-0.130	298.303	0%	28%			

2.Inspector mest fillout the yellow area.
3. The table will automatically calculate the data in green area.

Date	115/2/10
Part No.	MB06GP1010
Parts Name	front_bezel
Vendor	勇裕塑膠股份有限公司
R/D Eng.	
QA Engr.	

Engineering Specification																			
工程尺寸		Data1	Data2	Data3	Data4	Data5	Data6	Data7	Data8	Data9	Data10	Data11	Data12	Data13	Data14	Data15	Data16	Data17	Data18
量測工具	Tooling																		
工程規格	product spc	621	364.1	9															
正公差	Tolerence	0.5	0.5	0.15															
負公差	Tolerence	0.5	0.5	0.15															
工程上限	UCL	621.5	364.8	9.15	0	0	0	0	0	0	0	0	0	0	0	0	0	0	0
工程下限	LCL	620.5	363.8	8.85	0	0	0	0	0	0	0	0	0	0	0	0	0	0	0
Actual Data																			
量測尺寸		Data1	Data2	Data3	Data4	Data5	Data6	Data7	Data8	Data9	Data10	Data11	Data12	Data13	Data14	Data15	Data16	Data17	Data18
平均數	X bar	620.655	364.064	9.008929	#DIV/0!	#DIV/0!	#DIV/0!	#DIV/0!	#DIV/0!	#DIV/0!	#DIV/0!	#DIV/0!	#DIV/0!	#DIV/0!	#DIV/0!	#DIV/0!	#DIV/0!	#DIV/0!	#DIV/0!
標準差	Sigma	0.06363	0.06436	0.02203	#DIV/0!	#DIV/0!	#DIV/0!	#DIV/0!	#DIV/0!	#DIV/0!	#DIV/0!	#DIV/0!	#DIV/0!	#DIV/0!	#DIV/0!	#DIV/0!	#DIV/0!	#DIV/0!	#DIV/0!
中間值	Median	620.65	364.05	9.01	#NUM!	#NUM!	#NUM!	#NUM!	#NUM!	#NUM!	#NUM!	#NUM!	#NUM!	#NUM!	#NUM!	#NUM!	#NUM!	#NUM!	#NUM!
眾數	Mode	620.75	364.03	8.98	#N/A	#N/A	#N/A	#N/A	#N/A	#N/A	#N/A	#N/A	#N/A	#N/A	#N/A	#N/A	#N/A	#N/A	#N/A
最大值	Max	620.76	364.16	9.04	0	0	0	0	0	0	0	0	0	0	0	0	0	0	0
最小值	Min	620.55	363.95	8.98	0	0	0	0	0	0	0	0	0	0	0	0	0	0	0
	1 Sigma	620.718	364.128	9.03031	#DIV/0!	#DIV/0!	#DIV/0!	#DIV/0!	#DIV/0!	#DIV/0!	#DIV/0!	#DIV/0!	#DIV/0!	#DIV/0!	#DIV/0!	#DIV/0!	#DIV/0!	#DIV/0!	#DIV/0!
UCL	2 Sigma	620.782	364.193	9.05234	#DIV/0!	#DIV/0!	#DIV/0!	#DIV/0!	#DIV/0!	#DIV/0!	#DIV/0!	#DIV/0!	#DIV/0!	#DIV/0!	#DIV/0!	#DIV/0!	#DIV/0!	#DIV/0!	#DIV/0!
加標準差線	3 Sigma	620.846	364.257	9.07437	#DIV/0!	#DIV/0!	#DIV/0!	#DIV/0!	#DIV/0!	#DIV/0!	#DIV/0!	#DIV/0!	#DIV/0!	#DIV/0!	#DIV/0!	#DIV/0!	#DIV/0!	#DIV/0!	#DIV/0!
	1 Sigma	620.591	364	8.986076	#DIV/0!	#DIV/0!	#DIV/0!	#DIV/0!	#DIV/0!	#DIV/0!	#DIV/0!	#DIV/0!	#DIV/0!	#DIV/0!	#DIV/0!	#DIV/0!	#DIV/0!	#DIV/0!	#DIV/0!
LCL	2 Sigma	620.528	363.935	8.964237	#DIV/0!	#DIV/0!	#DIV/0!	#DIV/0!	#DIV/0!	#DIV/0!	#DIV/0!	#DIV/0!	#DIV/0!	#DIV/0!	#DIV/0!	#DIV/0!	#DIV/0!	#DIV/0!	#DIV/0!
加標準差線	3 Sigma	620.464	363.871	8.9422	#DIV/0!	#DIV/0!	#DIV/0!	#DIV/0!	#DIV/0!	#DIV/0!	#DIV/0!	#DIV/0!	#DIV/0!	#DIV/0!	#DIV/0!	#DIV/0!	#DIV/0!	#DIV/0!	#DIV/0!
	CP	2.61916	2.58956	2.26989	#DIV/0!	#DIV/0!	#DIV/0!	#DIV/0!	#DIV/0!	#DIV/0!	#DIV/0!	#DIV/0!	#DIV/0!	#DIV/0!	#DIV/0!	#DIV/0!	#DIV/0!	#DIV/0!	#DIV/0!
	CPL	0.81119	1.26729	2.39528	#DIV/0!	#DIV/0!	#DIV/0!	#DIV/0!	#DIV/0!	#DIV/0!	#DIV/0!	#DIV/0!	#DIV/0!	#DIV/0!	#DIV/0!	#DIV/0!	#DIV/0!	#DIV/0!	#DIV/0!
	CPU	4.42713	3.81183	2.14451	#DIV/0!	#DIV/0!	#DIV/0!	#DIV/0!	#DIV/0!	#DIV/0!	#DIV/0!	#DIV/0!	#DIV/0!	#DIV/0!	#DIV/0!	#DIV/0!	#DIV/0!	#DIV/0!	#DIV/0!
製程能力	CPK	2.16717	2.28999	2.23855	#DIV/0!	#DIV/0!	#DIV/0!	#DIV/0!	#DIV/0!	#DIV/0!	#DIV/0!	#DIV/0!	#DIV/0!	#DIV/0!	#DIV/0!	#DIV/0!	#DIV/0!	#DIV/0!	#DIV/0!
	CA	1.45199	1.30557	1.05135	#DIV/0!	#DIV/0!	#DIV/0!	#DIV/0!	#DIV/0!	#DIV/0!	#DIV/0!	#DIV/0!	#DIV/0!	#DIV/0!	#DIV/0!	#DIV/0!	#DIV/0!	#DIV/0!	#DIV/0!

SAMPLE	Data 1	Data 2	Data 3	Data 4	Data 5	Data 6	Data 7	Data 8	Data 9	Data 10	Data 11	Data 12	Data 13	Data 14	Data 15	Data 16	Data 17	Data 18	Range1	頻率 1	比例 1	Range4	頻率 4	比例 4	Range7	頻率 7	比例 7	Range10	頻率 1(	比例 10	Range1:	頻率 13	比例 13	Range16	頻率 16	比例 16
1	620.72	364.15	9.02																620.50	1	2.86%	0.00	0	0.00%	0.00	0	0.00%	0.00	0	0.00%	0.00	0	0.00%	0.00	0	0.00%
2	620.67	364.13	8.98																620.61	10	28.57%	0.11	0	0.00%	0.11	0	0.00%	0.11	0	0.00%	0.11	0	0.00%	0.11	0	0.00%
3	620.65	364.03	9.02																620.72	18	51.43%	0.22	0	0.00%	0.22	0	0.00%	0.22	0	0.00%	0.22	0	0.00%	0.22	0	0.00%
4	620.75	364.02	9.00																620.83	6	17.14%	0.33	0	0.00%	0.33	0	0.00%	0.33	0	0.00%	0.33	0	0.00%	0.33	0	0.00%
5	620.6	364.07	8.98																620.94	0	0.00%	0.44	0	0.00%	0.44	0	0.00%	0.44	0	0.00%	0.44	0	0.00%	0.44	0	0.00%
6	620.69	364.01	8.99																621.06	0	0.00%	0.56	0	0.00%	0.56	0	0.00%	0.56	0	0.00%	0.56	0	0.00%	0.56	0	0.00%
7	620.7	364.11	9.03																621.17	0	0.00%	0.67	0	0.00%	0.67	0	0.00%	0.67	0	0.00%	0.67	0	0.00%	0.67	0	0.00%
8	620.58	364.16	8.99																621.28	0	0.00%	0.78	0	0.00%	0.78	0	0.00%	0.78	0	0.00%	0.78	0	0.00%	0.78	0	0.00%
9	620.59	364.04	8.98																621.39	0	0.00%	0.89	0	0.00%	0.89	0	0.00%	0.89	0	0.00%	0.89	0	0.00%	0.89	0	0.00%
10	620.56	364.12	9.02																621.50	0	0.00%	0.00	0	0.00%	0.00	0	0.00%	0.00	0	0.00%	0.00	0	0.00%	0.00	0	0.00%
11	620.62	363.95	9.03																																	
12	620.68	364.15	8.99																Range2	頻率 2	比例 2	Range5	頻率 5	比例 5	Range8	頻率 8	比例 8	Range11	頻率 1(	比例 11	Range1:	頻率 14	比例 14	Range17	頻率 17	比例 17
13	620.63	364	9.04																363.80	1	2.86%	0.00	0	0.00%	0.00	0	0.00%	0.00	0	0.00%	0.00	0	0.00%	0.00	0	0.00%
14	620.75	364.02	9.01																363.91	0	0.00%	0.11	0	0.00%	0.11	0	0.00%	0.11	0	0.00%	0.11	0	0.00%	0.11	0	0.00%
15	620.63	364.14	9.04																364.02	12	34.29%	0.22	0	0.00%	0.22	0	0.00%	0.22	0	0.00%	0.22	0	0.00%	0.22	0	0.00%
16	620.75	364.11	9.01																364.13	15	42.86%	0.33	0	0.00%	0.33	0	0.00%	0.33	0	0.00%	0.33	0	0.00%	0.33	0	0.00%
17	620.76	364.14	9.03																364.24	7	20.00%	0.44	0	0.00%	0.44	0	0.00%	0.44	0	0.00%	0.44	0	0.00%	0.44	0	0.00%
18	620.73	364	9.01																364.36	0	0.00%	0.56	0	0.00%	0.56	0	0.00%	0.56	0	0.00%	0.56	0	0.00%	0.56	0	0.00%
19	620.59	364.14	9.04																364.47	0	0.00%	0.67	0	0.00%	0.67	0	0.00%	0.67	0	0.00%	0.67	0	0.00%	0.67	0	0.00%
20	620.55	364.03	8.98																364.58	0	0.00%	0.78	0	0.00%	0.78	0	0.00%	0.78	0	0.00%	0.78	0	0.00%	0.78	0	0.00%
21	620.64	364.16	9.01																364.69	0	0.00%	0.89	0	0.00%	0.89	0	0.00%	0.89	0	0.00%	0.89	0	0.00%	0.89	0	0.00%
22	620.69	363.97	8.99																364.80	0	0.00%	0.00	0	0.00%	0.00	0	0.00%	0.00	0	0.00%	0.00	0	0.00%	0.00	0	0.00%
23	620.56	364.04	8.99																																	
24	620.64	364.08	8.99																Range3	頻率 3	比例 3	Range6	頻率 6	比例 6	Range9	頻率 9	比例 9	Range12	頻率 1:	比例 12	Range1:	頻率 15	比例 15	Range18	頻率 1(	比例 18
25	620.67	364.11	8.99																8.85	1	2.86%	0.00	0	0.00%	0.00	0	0.00%	0.00	0	0.00%	0.00	0	0.00%	0.00	0	0.00%
26	620.74	364.12	9.03																8.88	0	0.00%	0.03	0	0.00%	0.03	0	0.00%	0.03	0	0.00%	0.03	0	0.00%	0.03	0	0.00%
27	620.66	364.02	9.00																8.92	0	0.00%	0.07	0	0.00%	0.07	0	0.00%	0.07	0	0.00%	0.07	0	0.00%	0.07	0	0.00%
28	620.6	363.97	8.98																8.95	0	0.00%	0.10	0	0.00%	0.10	0	0.00%	0.10	0	0.00%	0.10	0	0.00%	0.10	0	0.00%
29	620.63	364.05	8.98																8.98	7	20.00%	0.13	0	0.00%	0.13	0	0.00%	0.13	0	0.00%	0.13	0	0.00%	0.13	0	0.00%
30	620.72	363.99	9.03																9.02	13	37.14%	0.17	0	0.00%	0.17	0	0.00%	0.17	0	0.00%	0.17	0	0.00%	0.17	0	0.00%
31	620.69	364.01	8.98																9.05	14	40.00%	0.20	0	0.00%	0.20	0	0.00%	0.20	0	0.00%	0.20	0	0.00%	0.20	0	0.00%
32	620.7	363.97	9.04																9.08	0	0.00%	0.23	0	0.00%	0.23	0	0.00%	0.23	0	0.00%	0.23	0	0.00%	0.23	0	0.00%
33	620.55	364.08	9.04																9.12	0	0.00%	0.27	0	0.00%	0.27	0	0.00%	0.27	0	0.00%	0.27	0	0.00%	0.27	0	0.00%
34	620.58	364.03	9.02																9.15	0	0.00%	0.00	0	0.00%	0.00	0	0.00%	0.00	0	0.00%	0.00	0	0.00%	0.00	0	0.00%
35	620.65	364.12	9.03																																	

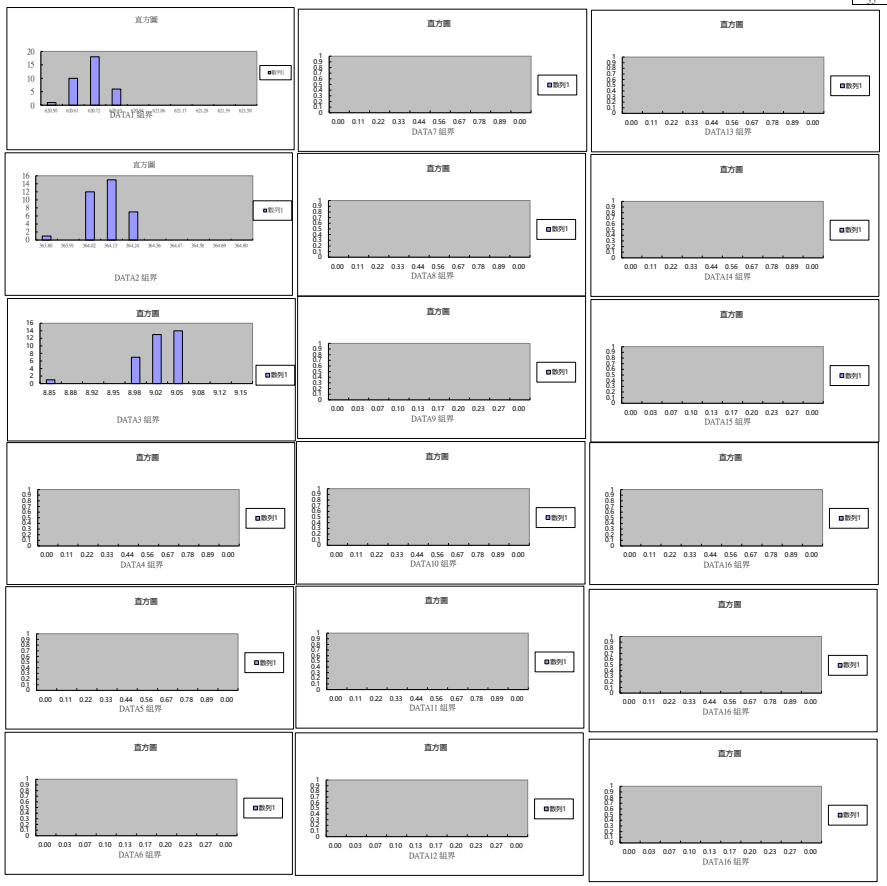


PHILIPS



材質保證書

Material Assurance Certificate

供應商：
Supplier : 勇發塑膠股份有限公司

訂單號碼：
P/O NO. _____

品　　名：
Model No. 3MD695P1010

規 格：
Part No. PC/ABS

交貨日期：
Delivery : _____

交貨數量：
Qty. : _____

原 料 製 造 商：
Material Manufacturer 拜耳

經銷商：
Dealer : 創騰股份有限公司

原料品名規格編號：
Material part No. : FR3010

含籤比例：
With fiber : 0%

原料 UL 號碼：
Material UL File Number: E41613

原料防火等級：
Material Flammabibity Class: _____

使用再回收料(料頭)比例 ：
With what percentage of recycle material 0 %

本公司保証所生產交予鈺緯科技開發股份有限公司之物料均確實依據上述規格供應

若有變更或使用次級材料混合而與上述規格資料不符，而造成鈺緯公司產品異

常與商譽損失時，本公司願意承擔一切賠償與法律責任。　　特此證明

供應商簽章：

Singature :

日期　　2026 年 02 月 10 日
Date :

表單編號:QP 1001-03-4.1

检验证书“3.1” EN 10204

科思创（上海）投资有限公司
晶耀商务广场5号楼25层
200126 上海市浦东新区平家桥路36号

日期 2025-09-22

产品名称
拜本兰 FR3010
901510
PE-SACK 25KG CP1-HT-PAL 1500KG

产品代码
81008095

客户采购单数据

送达方	订单数量	您的采购单号
	15000 KG	

订单数据

订单号	交货单号	交货数量
		15000 KG

批号数据

批号	交货数量
05CB5G0522	15000 KG

检测	方法	结果	指标	单位
体积熔融指数	ISO 1133-1 240°C / 5.0 kg	15.1	9.0 - 21.0	$cm^3/10min$
阻燃性能	UL 94 V-0 1.5 mm	Pass		

如有任何关于此检验证书的疑问，请联系
Jing Yan
TECHNICAL PRODUCT MANAGEMENT POLYCARBONATES
Mail: COA.PCS_APAC@covestro.com

1. 本通知以电子方式生成，未经签字仍为有效。
2. 以上数据说明和检验值不能视为产品应用的性能保证或保证承诺。本通知并不免除客户进行进货检验的义务。
3. 本检验结果经由科思创公司任命的独立检验代表的确认。

測試報告
Test Report

號碼(No.): ETR25A00102　　日期(Date): 09-Oct-2025　　

葆旺股份有限公司 (PRO WONDERFUL INCORPORATION)
台北市內湖區洲子街63號7樓 (7F., NO. 63, ZHOUZI ST., NEIHU DIST., TAIPEI, TAIWAN (R. O. C.))

以下測試樣品係由申請廠商所提供及確認 (The following sample(s) was/were submitted and identified by the applicant as)：

送樣廠商(Sample Submitted By)	:	葆旺股份有限公司 (PRO WONDERFUL INCORPORATION)
樣品名稱(Sample Name)	:	塑膠粒子
樣品型號(Style/Item No.)	:	TN-7000(#)、TN-3712B(#)、TN-3713B(#)、TN-3715B(#)、TN-3813B(#)、TN-3815B(#)、TN-3733B(#)、TN-3725B(#)、ML6107ZHP、GN3410R、G3410、G3420、G3430、G3520M、GN3610H 、GN36(CC)H# 、GXV-35(CC)(#)、 GV-35(CC)R、MN3600H(#)、MN-3705、TNA-X3745B、TNA-F3745B、TNA-K3745B、TNA-F3743B、 TNA-X3743B、FR3010、FR-3010HF、940、943、945、ML7694(#)、C6200(#)、C6600(#)、C2950(#)、C2800(#)、C1200HF(#)、3412ECR(#)、C7230P 、T3RC7230P、T5RC7230P 、 C7410P、CM6120、C7230P

==========

收件日(Sample Receiving Date)	:	01-Oct-2025
測試期間(Testing Period)	:	01-Oct-2025 to 09-Oct-2025

測試需求(Test Requested) :

(1) 依據客戶指定，參考RoHS 2011/65/EU Annex II及其修訂指令(EU) 2015/863測試鎘、鉛、汞、六價鉻、多溴聯苯、多溴聯苯醚, DBP, BBP, DEHP, DIBP。 (As specified by client, with reference to RoHS 2011/65/EU Annex II and amending Directive (EU) 2015/863 to determine Cadmium, Lead, Mercury, Cr(VI), PBBs, PBDEs, DBP, BBP, DEHP, DIBP contents in the submitted sample(s).)

(2) 依據客戶指定，測試 PAHs 及其他測項。 (As specified by client, to test PAHs and other item(s).)

測試結果(Test Results) : 請參閱下一頁 (Please refer to following pages.)

結　論(Conclusion) :

(1) 根據客戶所提供的樣品，其鎘、鉛、汞、六價鉻、多溴聯苯、多溴聯苯醚, DBP, BBP, DEHP, DIBP的測試結果符合RoHS 2011/65/EU Annex II暨其修訂指令(EU) 2015/863之限值要求。 (Based on the performed tests on submitted sample(s), the test results of Cadmium, Lead, Mercury, Cr(VI), PBBs, PBDEs, DBP, BBP, DEHP, DIBP comply with the limits as set by RoHS Directive (EU) 2015/863 amending Annex II to Directive 2011/65/EU.)

Troy Chang / Department Manager
Signed for and on behalf of
SGS TAIWAN LTD.
Chemical Laboratory - Taipei

CHECK REPORT
PIN CODE: 0F241799

This document is issued by the Company subject to its General Conditions of Service printed overleaf, available on request or accessible at https://www.sgs.com.tw/terms-of-service and, for electronic format documents, subject to Terms and Conditions for Electronic Documents at https://www.sgs.com.tw/terms-of-service. Attention is drawn to the limitation of liability, indemnification and jurisdiction issues defined therein. Any holder of this document is advised that information contained hereon reflects the Company's findings at the time of its intervention only and within the limits of client's instruction, if any. The Company's sole responsibility is to its Client and this document does not exonerate parties to a transaction from exercising all their rights and obligations under the transaction documents. This document cannot be reproduced, except in full, without prior written approval of the Company. Any unauthorized alteration, forgery or falsification of the content or appearance of this document is unlawful and offenders may be prosecuted to the fullest extent of the law. Unless otherwise stated the results shown in this test report refer only to the sample(s) tested.

測試報告
Test Report

葆旺股份有限公司 (PRO WONDERFUL INCORPORATION)
台北市內湖區洲子街63號7樓 (7F., NO. 63, ZHOUZI ST., NEIHU DIST., TAIPEI, TAIWAN (R. O. C.))

測試部位敘述 (Test Part Description)

No.1 : 白色塑膠粒 (WHITE PLASTIC PELLETS)

測試結果 (Test Results)

測試項目 (Test Items)	測試方法 (Method)	單位 (Unit)	MDL	結果 (Result) No.1	限值 (Limit)
鎘 (Cd) (Cadmium (Cd))	參考IEC 62321-5: 2013，以感應耦合電漿發射光譜儀分析。(With reference to IEC 62321-5: 2013, analysis was performed by ICP-OES.)	mg/kg	2	n.d.	100
鉛 (Pb) (Lead (Pb))	參考IEC 62321-5: 2013，以感應耦合電漿發射光譜儀分析。(With reference to IEC 62321-5: 2013, analysis was performed by ICP-OES.)	mg/kg	2	n.d.	1000
汞 (Hg) (Mercury (Hg))	參考IEC 62321-4: 2013+ AMD1: 2017，以感應耦合電漿發射光譜儀分析。(With reference to IEC 62321-4: 2013+ AMD1: 2017, analysis was performed by ICP-OES.)	mg/kg	2	n.d.	1000
六價鉻 Cr(VI) (Hexavalent Chromium Cr(VI))	參考IEC 62321-7-2: 2017，以紫外光-可見光分光光度計分析。(With reference to IEC 62321-7-2: 2017, analysis was performed by UV-VIS.)	mg/kg	8	n.d.	1000
一溴聯苯 (Monobromobiphenyl)	參考IEC 62321-6: 2015，以氣相層析儀/質譜儀分析。(With reference to IEC 62321-6: 2015, analysis was performed by GC/MS.)	mg/kg	5	n.d.	-
二溴聯苯 (Dibromobiphenyl)		mg/kg	5	n.d.	-
三溴聯苯 (Tribromobiphenyl)		mg/kg	5	n.d.	-
四溴聯苯 (Tetrabromobiphenyl)		mg/kg	5	n.d.	-
五溴聯苯 (Pentabromobiphenyl)		mg/kg	5	n.d.	-
六溴聯苯 (Hexabromobiphenyl)		mg/kg	5	n.d.	-
七溴聯苯 (Heptabromobiphenyl)		mg/kg	5	n.d.	-
八溴聯苯 (Octabromobiphenyl)		mg/kg	5	n.d.	-
九溴聯苯 (Nonabromobiphenyl)		mg/kg	5	n.d.	-
十溴聯苯 (Decabromobiphenyl)		mg/kg	5	n.d.	-
多溴聯苯總和 (Sum of PBBs)		mg/kg	-	n.d.	1000

This document is issued by the Company subject to its General Conditions of Service printed overleaf, available on request or accessible at https://www.sgs.com.tw/terms-of-service and, for electronic format documents, subject to Terms and Conditions for Electronic Documents at https://www.sgs.com.tw/terms-of-service. Attention is drawn to the limitation of liability, indemnification and jurisdiction issues defined therein. Any holder of this document is advised that information contained hereon reflects the Company's findings at the time of its intervention only and within the limits of client's instruction, if any. The Company's sole responsibility is to its Client and this document does not exonerate parties to a transaction from exercising all their rights and obligations under the transaction documents. This document cannot be reproduced, except in full, without prior written approval of the Company. Any unauthorized alteration, forgery or falsification of the content or appearance of this document is unlawful and offenders may be prosecuted to the fullest extent of the law. Unless otherwise stated the results shown in this test report refer only to the sample(s) tested.

測試報告
Test Report

葆旺股份有限公司 (PRO WONDERFUL INCORPORATION)
台北市內湖區洲子街63號7樓 (7F., NO. 63, ZHOUZI ST., NEIHU DIST., TAIPEI, TAIWAN (R. O. C.))

測試項目 (Test Items)	測試方法 (Method)	單位 (Unit)	MDL	結果 (Result) No.1	限值 (Limit)
一溴聯苯醚 (Monobromodiphenyl ether)	參考IEC 62321-6: 2015，以氣相層析儀/質譜儀分析。(With reference to IEC 62321-6: 2015, analysis was performed by GC/MS.)	mg/kg	5	n.d.	-
二溴聯苯醚 (Dibromodiphenyl ether)		mg/kg	5	n.d.	-
三溴聯苯醚 (Tribromodiphenyl ether)		mg/kg	5	n.d.	-
四溴聯苯醚 (Tetrabromodiphenyl ether)		mg/kg	5	n.d.	-
五溴聯苯醚 (Pentabromodiphenyl ether)		mg/kg	5	n.d.	-
六溴聯苯醚 (Hexabromodiphenyl ether)		mg/kg	5	n.d.	-
七溴聯苯醚 (Heptabromodiphenyl ether)		mg/kg	5	n.d.	-
八溴聯苯醚 (Octabromodiphenyl ether)		mg/kg	5	n.d.	-
九溴聯苯醚 (Nonabromodiphenyl ether)		mg/kg	5	n.d.	-
十溴聯苯醚 (Decabromodiphenyl ether)		mg/kg	5	n.d.	-
多溴聯苯醚總和 (Sum of PBDEs)		mg/kg	-	n.d.	1000
鄰苯二甲酸丁苯甲酯 (BBP) (Butyl benzyl phthalate (BBP))	參考IEC 62321-8: 2017，以氣相層析儀/質譜儀分析。(With reference to IEC 62321-8: 2017, analysis was performed by GC/MS.)	mg/kg	50	n.d.	1000
鄰苯二甲酸二丁酯 (DBP) (Dibutyl phthalate (DBP))		mg/kg	50	n.d.	1000
鄰苯二甲酸二(2-乙基己基)酯 (DEHP) (Di-(2-ethylhexyl) phthalate (DEHP))		mg/kg	50	n.d.	1000
鄰苯二甲酸二異丁酯 (DIBP) (Diisobutyl phthalate (DIBP))		mg/kg	50	n.d.	1000
氟 (F) (Fluorine (F)) (CAS No.: 14762-94-8)	參考BS EN 14582: 2016，以離子層析儀分析。(With reference to BS EN 14582: 2016, analysis was performed by IC.)	mg/kg	50	2300	-
氯 (Cl) (Chlorine (Cl)) (CAS No.: 22537-15-1)		mg/kg	50	n.d.	-
溴 (Br) (Bromine (Br)) (CAS No.: 10097-32-2)		mg/kg	50	n.d.	-
碘 (I) (Iodine (I)) (CAS No.: 14362-44-8)		mg/kg	50	n.d.	-

This document is issued by the Company subject to its General Conditions of Service printed overleaf, available on request or accessible at https://www.sgs.com.tw/terms-of-service and, for electronic format documents, subject to Terms and Conditions for Electronic Documents at https://www.sgs.com.tw/terms-of-service. Attention is drawn to the limitation of liability, indemnification and jurisdiction issues defined therein. Any holder of this document is advised that information contained hereon reflects the Company's findings at the time of its intervention only and within the limits of client's instruction, if any. The Company's sole responsibility is to its Client and this document does not exonerate parties to a transaction from exercising all their rights and obligations under the transaction documents. This document cannot be reproduced, except in full, without prior written approval of the Company. Any unauthorized alteration, forgery or falsification of the content or appearance of this document is unlawful and offenders may be prosecuted to the fullest extent of the law. Unless otherwise stated the results shown in this test report refer only to the sample(s) tested.

測試報告
Test Report

號碼(No.): ETR25A00102　　日期(Date): 09-Oct-2025　　

葆旺股份有限公司 (PRO WONDERFUL INCORPORATION)
台北市內湖區洲子街63號7樓 (7F., NO. 63, ZHOUZI ST., NEIHU DIST., TAIPEI, TAIWAN (R. O. C.))

測試項目 (Test Items)	測試方法 (Method)	單位 (Unit)	MDL	結果 (Result) No.1	限值 (Limit)
多環芳香烴 (Polycyclic Aromatic Hydrocarbons) (PAHs)					
苯駢(a)芘 (Benzo[a]pyrene) (CAS No.: 50-32-8)	參考AfPS GS 2019:01 PAK，以氣相層析儀/質譜儀分析。(With reference to AfPS GS 2019:01 PAK, analysis was performed by GC/MS.)	mg/kg	0.2	n.d.	-
苯駢(e)芘 (Benzo[e]pyrene) (CAS No.: 192-97-2)		mg/kg	0.2	n.d.	-
苯駢蒽 (Benzo[a]anthracene) (CAS No.: 56-55-3)		mg/kg	0.2	n.d.	-
苯(b)苯駢芴 (Benzo[b]fluoranthene) (CAS No.: 205-99-2)		mg/kg	0.2	n.d.	-
苯(j)苯駢芴 (Benzo[j]fluoranthene) (CAS No.: 205-82-3)		mg/kg	0.2	n.d.	-
苯(k)苯駢芴 (Benzo[k]fluoranthene) (CAS No.: 207-08-9)		mg/kg	0.2	n.d.	-
䓛 (Chrysene) (CAS No.: 218-01-9)		mg/kg	0.2	n.d.	-
二苯駢蒽 (Dibenzo[a,h]anthracene) (CAS No.: 53-70-3)		mg/kg	0.2	n.d.	-
苯駢苝 (Benzo[g,h,i]perylene) (CAS No.: 191-24-2)		mg/kg	0.2	n.d.	-
茚酮芘 (Indeno[1,2,3-c,d]pyrene) (CAS No.: 193-39-5)		mg/kg	0.2	n.d.	-
蒽 (Anthracene) (CAS No.: 120-12-7)		mg/kg	0.2	n.d.	-
苯駢芴 (Fluoranthene) (CAS No.: 206-44-0)		mg/kg	0.2	n.d.	-
菲 (Phenanthrene) (CAS No.: 85-01-8)		mg/kg	0.2	n.d.	-
芘 (Pyrene) (CAS No.: 129-00-0)		mg/kg	0.2	n.d.	-
萘 (Naphthalene) (CAS No.: 91-20-3)		mg/kg	0.2	n.d.	-
多環芳香烴15項總和 (Sum of 15 PAHs)		mg/kg	-	n.d.	-
苊烯 (Acenaphthylene) (CAS No.: 208-96-8)	參考AfPS GS 2019:01 PAK，以氣相層析儀/質譜儀分析。(With reference to AfPS GS 2019:01 PAK, analysis was performed by GC/MS.)	mg/kg	0.2	n.d.	-
苊 (Acenaphthene) (CAS No.: 83-32-9)		mg/kg	0.2	n.d.	-
芴 (Fluorene) (CAS No.: 86-73-7)		mg/kg	0.2	n.d.	-

This document is issued by the Company subject to its General Conditions of Service printed overleaf, available on request or accessible at https://www.sgs.com.tw/terms-of-service and, for electronic format documents, subject to Terms and Conditions for Electronic Documents at https://www.sgs.com.tw/terms-of-service. Attention is drawn to the limitation of liability, indemnification and jurisdiction issues defined therein. Any holder of this document is advised that information contained hereon reflects the Company's findings at the time of its intervention only and within the limits of client's instruction, if any. The Company's sole responsibility is to its Client and this document does not exonerate parties to a transaction from exercising all their rights and obligations under the transaction documents. This document cannot be reproduced, except in full, without prior written approval of the Company. Any unauthorized alteration, forgery or falsification of the content or appearance of this document is unlawful and offenders may be prosecuted to the fullest extent of the law. Unless otherwise stated the results shown in this test report refer only to the sample(s) tested.

葆旺股份有限公司 (PRO WONDERFUL INCORPORATION)
台北市內湖區洲子街63號7樓 (7F., NO. 63, ZHOUZI ST., NEIHU DIST., TAIPEI, TAIWAN (R. O. C.))

備註(Note)：

1. mg/kg = ppm ; 0.1wt% = 0.1% = 1000ppm
2. MDL = Method Detection Limit (方法偵測極限值)
3. n.d. = Not Detected (未檢出) ; 小於MDL / Less than MDL
4. "-" = Not Regulated (無規格值)
5. 除非另有說明，參照ILAC-G8:09/2019決定規則，採用簡單允收規則之二分法(w=0)進行符合性判定；根據此規則，符合性結果之判定係以測試結果與限值做比較。(Unless otherwise stated , the decision rule for conformity reporting is based on Binary Statement for Simple Acceptance Rule (w=0) stated in ILAC-G8:09/2019. According to this rule, the judgement of conformity is based on the comparing test results with limits.)

This document is issued by the Company subject to its General Conditions of Service printed overleaf, available on request or accessible at https://www.sgs.com.tw/terms-of-service and, for electronic format documents, subject to Terms and Conditions for Electronic Documents at https://www.sgs.com.tw/terms-of-service. Attention is drawn to the limitation of liability, indemnification and jurisdiction issues defined therein. Any holder of this document is advised that information contained hereon reflects the Company's findings at the time of its intervention only and within the limits of client's instruction, if any. The Company's sole responsibility is to its Client and this document does not exonerate parties to a transaction from exercising all their rights and obligations under the transaction documents. This document cannot be reproduced, except in full, without prior written approval of the Company. Any unauthorized alteration, forgery or falsification of the content or appearance of this document is unlawful and offenders may be prosecuted to the fullest extent of the law. Unless otherwise stated the results shown in this test report refer only to the sample(s) tested.

葆旺股份有限公司 (PRO WONDERFUL INCORPORATION)
台北市內湖區洲子街63號7樓 (7F., NO. 63, ZHOUZI ST., NEIHU DIST., TAIPEI, TAIWAN (R. O. C.))

PAHs Remark：

Δ 德國產品安全委員會(AfPS): GS PAHs 要求
AfPS (German commission for Product Safety): GS PAHs requirements

項目 (Parameter)	第 1 類(Category 1)	第 2 類(Category 2)		第 3 類(Category 3)	
	意圖放入口中的材料或者長時間接觸皮膚(超過 30 秒)的 2009/48/EC 定義的玩具材料和 3 歲以下兒童使用的產品(Materials intended to be placed in the mouth, or materials in toys (Directive 2009/48/EC) or articles for children up to 3 years of age with intended long-term skin contact (> 30 seconds))	不屬於第 1 類的材料，並意圖或可預見與皮膚接觸逾 30 秒(長期皮膚接觸)或重複的短時間接觸(Materials that are not in Category 1, with intended or foreseeable long-term skin contact (> 30 seconds) or short-term repetitive contact with the skin)		不屬於第 1 類或第 2 類的材料，並意圖或可預見與皮膚接觸不超過 30 秒(短期皮膚接觸)(Materials not covered by Category 1 or 2, with intended or foreseeable short-term skin contact (≦ 30 seconds))	
		a. 供 14 歲以下兒童使用的產品(Use by children under 14)	b. 其它產品(Other consumer products)	a. 供 14 歲以下兒童使用的產品(Use by children under 14)	b. 其它產品(Other consumer products)
Naphthalene	< 1	< 2		< 10	
Phenanthrene Anthracene Fluoranthene Pyrene	< 1 Sum	< 5 Sum	< 10 Sum	< 20 Sum	< 50 Sum
Benzo[a]anthracene	< 0.2	< 0.2	< 0.5	< 0.5	< 1
Chrysene	< 0.2	< 0.2	< 0.5	< 0.5	< 1
Benzo[b]fluoranthene	< 0.2	< 0.2	< 0.5	< 0.5	< 1
Benzo[j]fluoranthene	< 0.2	< 0.2	< 0.5	< 0.5	< 1
Benzo[k]fluoranthene	< 0.2	< 0.2	< 0.5	< 0.5	< 1
Benzo[a]pyrene	< 0.2	< 0.2	< 0.5	< 0.5	< 1
Benzo[e]pyrene	< 0.2	< 0.2	< 0.5	< 0.5	< 1
Indeno[1,2,3-c,d] pyrene	< 0.2	< 0.2	< 0.5	< 0.5	< 1
Dibenzo[a,h]anthracene	< 0.2	< 0.2	< 0.5	< 0.5	< 1
Benzo[g,h,i]perylene	< 0.2	< 0.2	< 0.5	< 0.5	< 1
15 項 PAH 總濃度 (Sum of 15 PAH)	< 1	< 5	< 10	< 20	< 50

單位(Unit)：mg/kg

This document is issued by the Company subject to its General Conditions of Service printed overleaf, available on request or accessible at https://www.sgs.com.tw/terms-of-service and, for electronic format documents, subject to Terms and Conditions for Electronic Documents at https://www.sgs.com.tw/terms-of-service. Attention is drawn to the limitation of liability, indemnification and jurisdiction issues defined therein. Any holder of this document is advised that information contained hereon reflects the Company's findings at the time of its intervention only and within the limits of client's instruction, if any. The Company's sole responsibility is to its Client and this document does not exonerate parties to a transaction from exercising all their rights and obligations under the transaction documents. This document cannot be reproduced, except in full, without prior written approval of the Company. Any unauthorized alteration, forgery or falsification of the content or appearance of this document is unlawful and offenders may be prosecuted to the fullest extent of the law. Unless otherwise stated the results shown in this test report refer only to the sample(s) tested.

葆旺股份有限公司 (PRO WONDERFUL INCORPORATION)
台北市內湖區洲子街63號7樓 (7F., NO. 63, ZHOUZI ST., NEIHU DIST., TAIPEI, TAIWAN (R. O. C.))

重金屬流程圖 / Analytical flow chart of heavy metal

根據以下的流程圖之條件，樣品已完全溶解。（六價鉻測試方法除外）

These samples were dissolved totally by pre-conditioning method according to below flow chart.
（Cr^{6+} test method excluded）

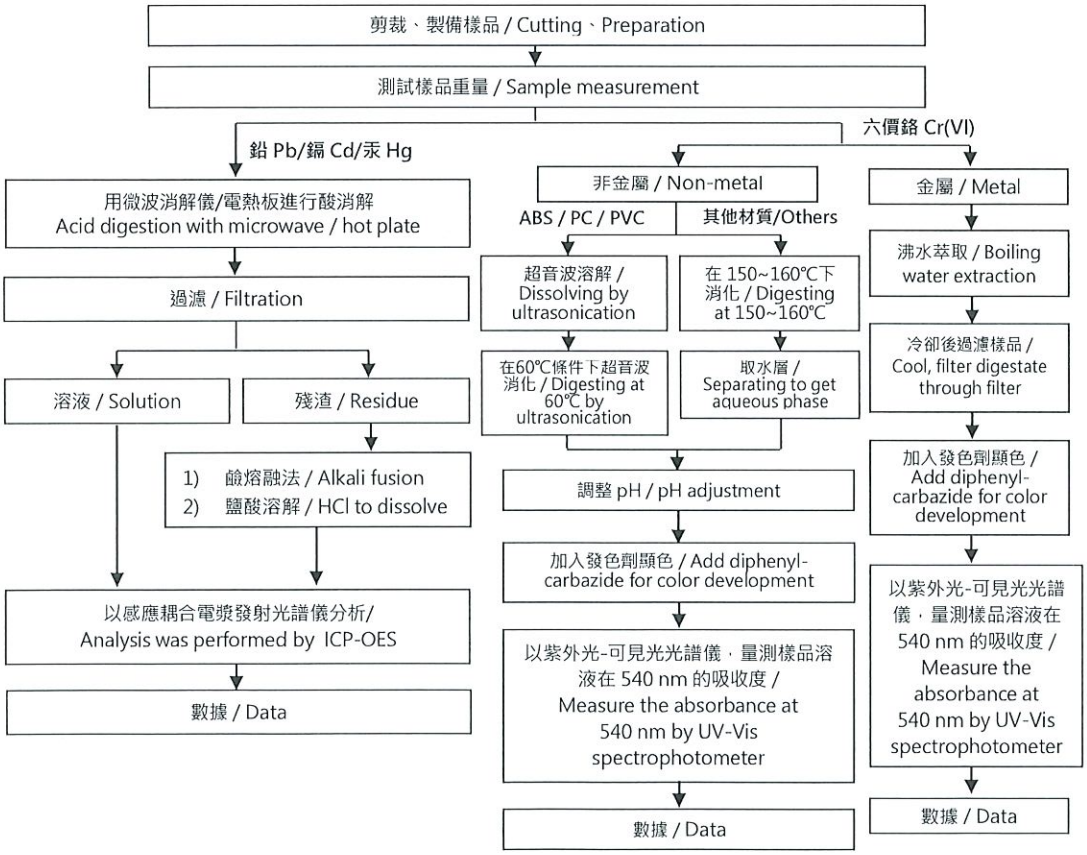

This document is issued by the Company subject to its General Conditions of Service printed overleaf, available on request or accessible at https://www.sgs.com.tw/terms-of-service and, for electronic format documents, subject to Terms and Conditions for Electronic Documents at https://www.sgs.com.tw/terms-of-service. Attention is drawn to the limitation of liability, indemnification and jurisdiction issues defined therein. Any holder of this document is advised that information contained hereon reflects the Company's findings at the time of its intervention only and within the limits of client's instruction, if any. The Company's sole responsibility is to its Client and this document does not exonerate parties to a transaction from exercising all their rights and obligations under the transaction documents. This document cannot be reproduced, except in full, without prior written approval of the Company. Any unauthorized alteration, forgery or falsification of the content or appearance of this document is unlawful and offenders may be prosecuted to the fullest extent of the law. Unless otherwise stated the results shown in this test report refer only to the sample(s) tested.

葆旺股份有限公司 (PRO WONDERFUL INCORPORATION)
台北市內湖區洲子街63號7樓 (7F., NO. 63, ZHOUZI ST., NEIHU DIST., TAIPEI, TAIWAN (R. O. C.))

多溴聯苯/多溴聯苯醚分析流程圖 / Analytical flow chart - PBBs/PBDEs

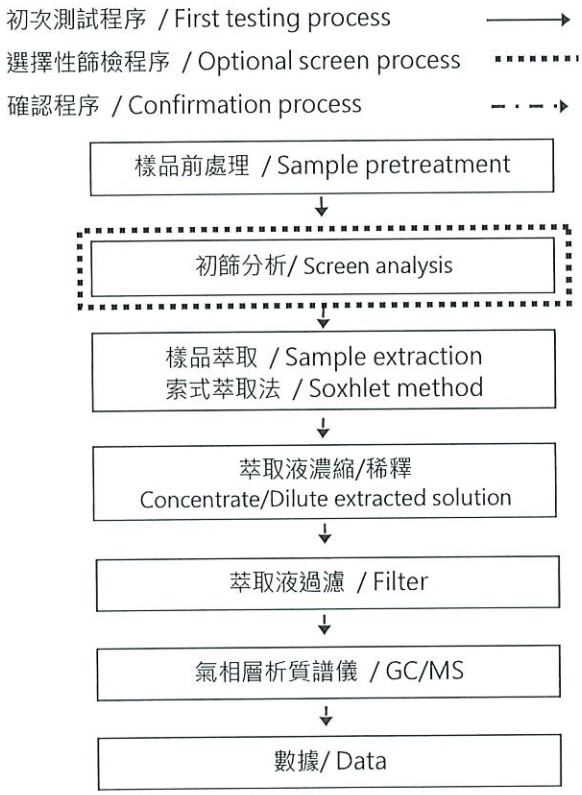

This document is issued by the Company subject to its General Conditions of Service printed overleaf, available on request or accessible at https://www.sgs.com.tw/terms-of-service and, for electronic format documents, subject to Terms and Conditions for Electronic Documents at https://www.sgs.com.tw/terms-of-service. Attention is drawn to the limitation of liability, indemnification and jurisdiction issues defined therein. Any holder of this document is advised that information contained hereon reflects the Company's findings at the time of its intervention only and within the limits of client's instruction, if any. The Company's sole responsibility is to its Client and this document does not exonerate parties to a transaction from exercising all their rights and obligations under the transaction documents. This document cannot be reproduced, except in full, without prior written approval of the Company. Any unauthorized alteration, forgery or falsification of the content or appearance of this document is unlawful and offenders may be prosecuted to the fullest extent of the law. Unless otherwise stated the results shown in this test report refer only to the sample(s) tested.

葆旺股份有限公司 (PRO WONDERFUL INCORPORATION)
台北市內湖區洲子街63號7樓 (7F., NO. 63, ZHOUZI ST., NEIHU DIST., TAIPEI, TAIWAN (R. O. C.))

可塑劑分析流程圖 / Analytical flow chart - Phthalate

【測試方法/Test method: IEC 62321-8】

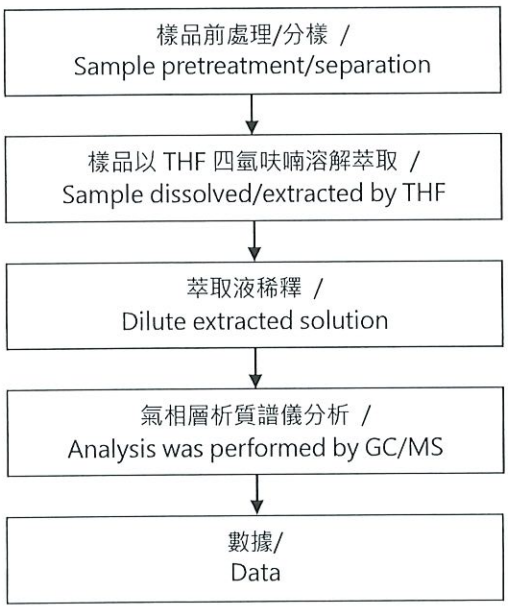

This document is issued by the Company subject to its General Conditions of Service printed overleaf, available on request or accessible at https://www.sgs.com.tw/terms-of-service and, for electronic format documents, subject to Terms and Conditions for Electronic Documents at https://www.sgs.com.tw/terms-of-service. Attention is drawn to the limitation of liability, indemnification and jurisdiction issues defined therein. Any holder of this document is advised that information contained hereon reflects the Company's findings at the time of its intervention only and within the limits of client's instruction, if any. The Company's sole responsibility is to its Client and this document does not exonerate parties to a transaction from exercising all their rights and obligations under the transaction documents. This document cannot be reproduced, except in full, without prior written approval of the Company. Any unauthorized alteration, forgery or falsification of the content or appearance of this document is unlawful and offenders may be prosecuted to the fullest extent of the law. Unless otherwise stated the results shown in this test report refer only to the sample(s) tested.

葆旺股份有限公司 (PRO WONDERFUL INCORPORATION)
台北市內湖區洲子街63號7樓 (7F., NO. 63, ZHOUZI ST., NEIHU DIST., TAIPEI, TAIWAN (R. O. C.))

鹵素分析流程圖 / Analytical flow chart - Halogen

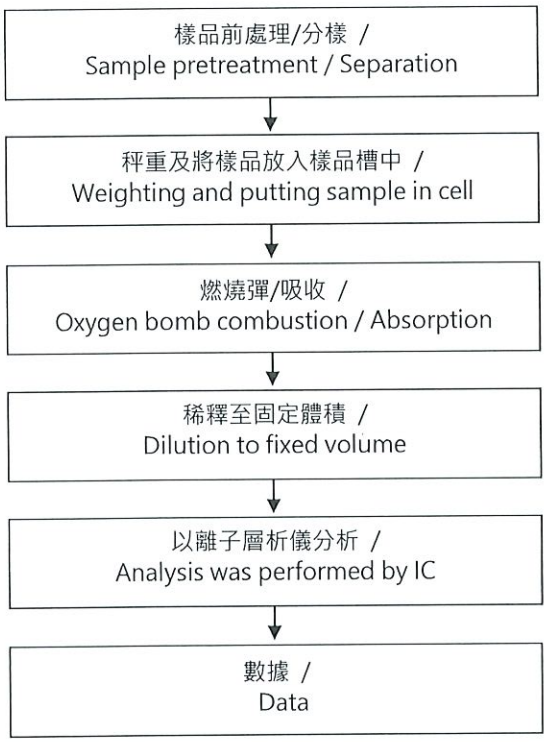

This document is issued by the Company subject to its General Conditions of Service printed overleaf, available on request or accessible at https://www.sgs.com.tw/terms-of-service and, for electronic format documents, subject to Terms and Conditions for Electronic Documents at https://www.sgs.com.tw/terms-of-service. Attention is drawn to the limitation of liability, indemnification and jurisdiction issues defined therein. Any holder of this document is advised that information contained hereon reflects the Company's findings at the time of its intervention only and within the limits of client's instruction, if any. The Company's sole responsibility is to its Client and this document does not exonerate parties to a transaction from exercising all their rights and obligations under the transaction documents. This document cannot be reproduced, except in full, without prior written approval of the Company. Any unauthorized alteration, forgery or falsification of the content or appearance of this document is unlawful and offenders may be prosecuted to the fullest extent of the law. Unless otherwise stated the results shown in this test report refer only to the sample(s) tested.

葆旺股份有限公司 (PRO WONDERFUL INCORPORATION)
台北市內湖區洲子街63號7樓 (7F., NO. 63, ZHOUZI ST., NEIHU DIST., TAIPEI, TAIWAN (R. O. C.))

多環芳香烴分析流程圖 /
Analytical flow chart - PAHs (Polycyclic Aromatic Hydrocarbons)

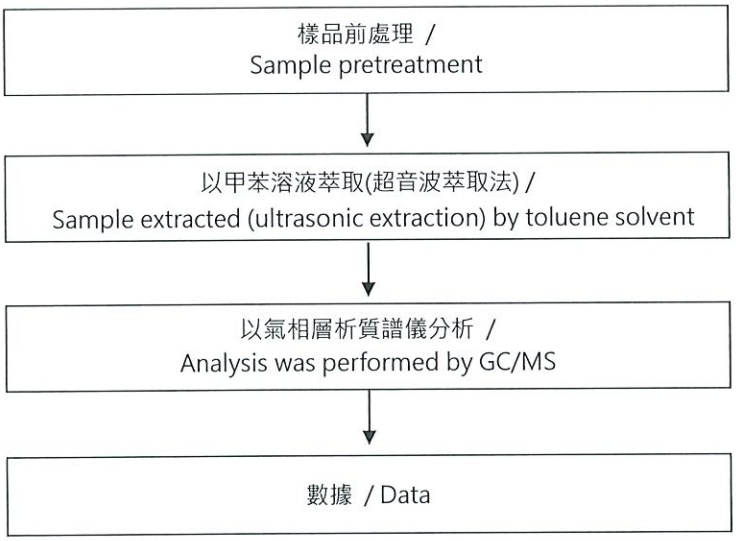

This document is issued by the Company subject to its General Conditions of Service printed overleaf, available on request or accessible at https://www.sgs.com.tw/terms-of-service and, for electronic format documents, subject to Terms and Conditions for Electronic Documents at https://www.sgs.com.tw/terms-of-service. Attention is drawn to the limitation of liability, indemnification and jurisdiction issues defined therein. Any holder of this document is advised that information contained hereon reflects the Company's findings at the time of its intervention only and within the limits of client's instruction, if any. The Company's sole responsibility is to its Client and this document does not exonerate parties to a transaction from exercising all their rights and obligations under the transaction documents. This document cannot be reproduced, except in full, without prior written approval of the Company. Any unauthorized alteration, forgery or falsification of the content or appearance of this document is unlawful and offenders may be prosecuted to the fullest extent of the law. Unless otherwise stated the results shown in this test report refer only to the sample(s) tested.

測試報告
Test Report

葆旺股份有限公司 (PRO WONDERFUL INCORPORATION)
台北市內湖區洲子街63號7樓 (7F., NO. 63, ZHOUZI ST., NEIHU DIST., TAIPEI, TAIWAN (R. O. C.))

* 照片中如有箭頭標示，則表示為實際檢測之樣品/部位. *
(The tested sample / part is marked by an arrow if it's shown on the photo.)

ETR25A00102



** 報告結尾 (End of Report) **

This document is issued by the Company subject to its General Conditions of Service printed overleaf, available on request or accessible at https://www.sgs.com.tw/terms-of-service and, for electronic format documents, subject to Terms and Conditions for Electronic Documents at https://www.sgs.com.tw/terms-of-service. Attention is drawn to the limitation of liability, indemnification and jurisdiction issues defined therein. Any holder of this document is advised that information contained hereon reflects the Company's findings at the time of its intervention only and within the limits of client's instruction, if any. The Company's sole responsibility is to its Client and this document does not exonerate parties to a transaction from exercising all their rights and obligations under the transaction documents. This document cannot be reproduced, except in full, without prior written approval of the Company. Any unauthorized alteration, forgery or falsification of the content or appearance of this document is unlawful and offenders may be prosecuted to the fullest extent of the law. Unless otherwise stated the results shown in this test report refer only to the sample(s) tested.