Pin 4

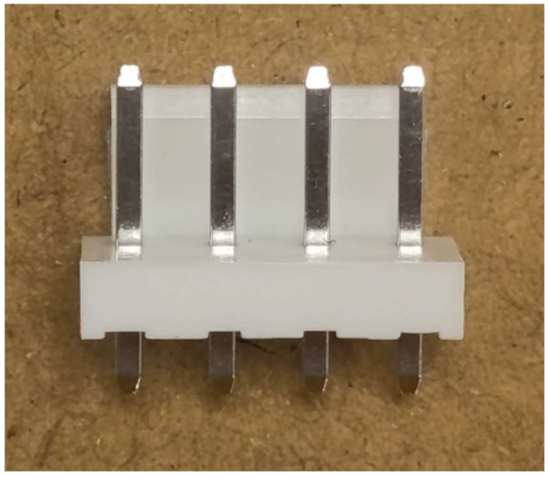

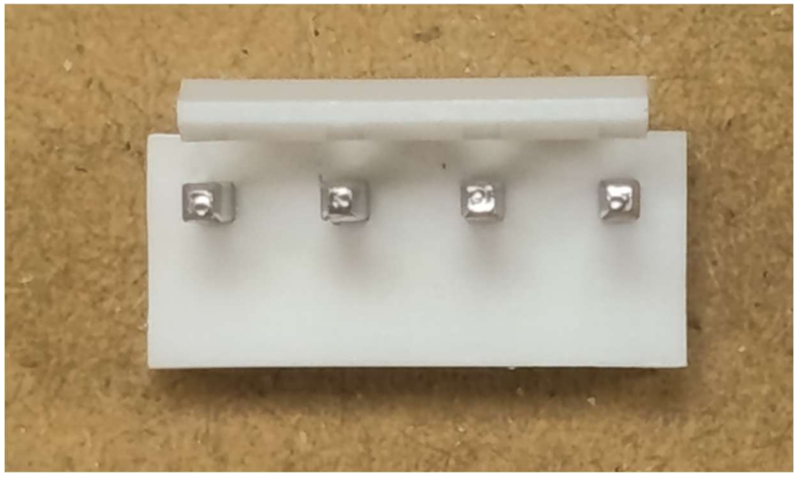

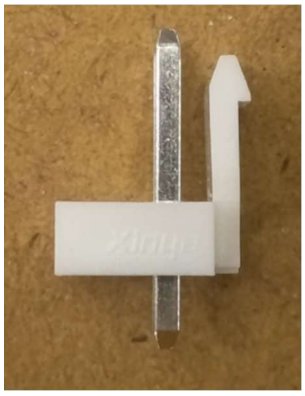

設計驗證
工程課
2026 -03- 26
發行

Xya 新亚 Electric Communication

SPECIFICATION FOR APPROVAL

承認書

Customer Name	DIVA
Description	3.96mm Pitch Connector
XINYA P/N	3FMxxx03530(F0334)
Customer P/N	M3962-xAC-A
Designed by	张福康
Checked by	李政达
Approved by	金卫星
DATE	2026.03.11

CUSTOMER SIGNATURE		
Prepared By	Checked By	Approved By
		設計驗證 工程課 2026-03-26 發行

PLEASE RETURN TO US ONE COPY OF SPECIFICATION FOR APPROVAL WITH YOUR APPROVED SIGNATURES.

苏州新亚电通股份有限公司

SUZHOU XINYA ELECTRIC COMMUNICATION CO., LTD.

COMPONENT SPEC VERSION RECORD

CUSTOMER PART NO.	3FMxxx03530	XINYA PART NO.	M3962-xAC-A

VER	MINUTE OF CHANGES	XINYA CHECK	RELEASE DATE
A	CHECKED AND RELEASED	金卫星	Mar-11-26

版本 REV.	日 期 DATE	DCN NO.	变更内容 DESCRIPTION	制图 DRAWN

成品规格图号DRAWING NO. M3962001S

No. of Contacts	DIMENSIONS A	B	C
2	3.96	7.92	5.34
3	7.92	11.88	9.30
4	11.88	15.84	13.26
5	15.85	19.80	17.22
6	19.80	23.76	21.18
7	23.76	27.72	25.14
8	27.72	31.68	29.10

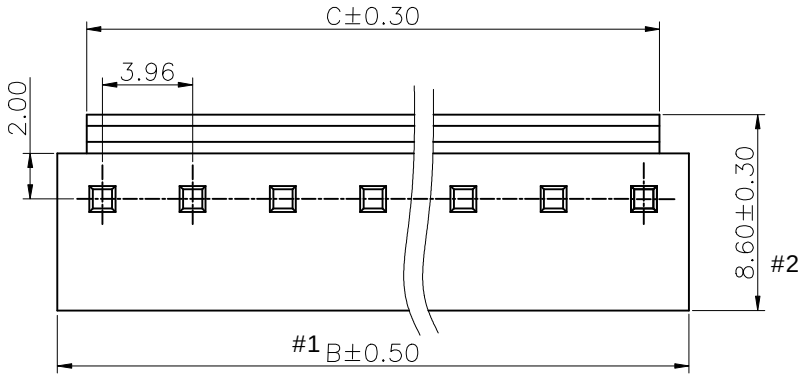

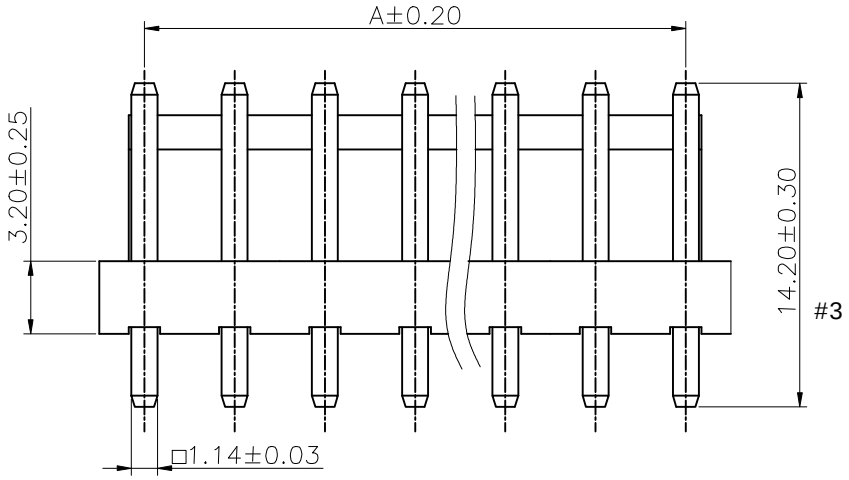

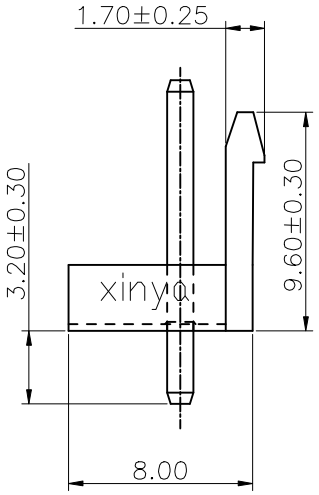

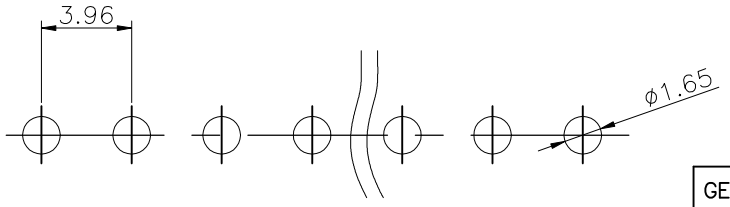

Hole Layout
(Tolerance: ±0.05)

Product Code:

M3962 – X A C – A
① ②③④ ⑤

① Series NO.

② Circuits number

③ Plating Code:

Definition	Code
◎ Tin plated:	A
Prefix "V" means lead free plating	

④ C: Complete Pin

⑤ Solder Area=3.2mm

設計驗證 工程課 2026-03-26 發行

NOTES:
1. Temperature range: −25°C ~ +85°C
2. Voltage rating: 250V,AC,DC
3. Current rating: 7A
4. Contact resistance: 10 mΩ Max
5. Insulation resistance: 1000MΩ Min
6. Withstand voltage: 1000V,AC/minute
7. Material:
   Housing: PA66, UL 94V-0. Natural
   Contact: Copper Alloy

GENERL TOLERANCE		制 图 (DR.)		料号 PART NO.	M3962-XAC-A	版本 REV.	A
X.±0.30	X.°±2°	审 核 (CHK.)		品 名 TITLE	P3.96 CONNECTOR	页 次 SHEET	1/1
.X±0.25	.X°±1°	核 准 (APPD.)		客户料号 CUTM.NO.	3FMxxx03530(F0334)		
.XX±0.20	.XX°±0.5°	第1版 (OR.D.)	2025.12.01	Xya 苏州新亚电通股份有限公司 SUZHOU XINYA ELECTRIC COMMUNICATION Co., LTD.			
.XXX±0.15	.XXX°±0.5°	单 位 UNITS	MM 比 例 SCALE 1:1				

苏州新亚电通股份有限公司 包装作业规范

文件编号	MPXXXX	适用产品	DIVA系列类产品包规	页次	1/1	版别	A

包装作业图示及说明 (PACKING OPERATION DIAGRAM & INSTRUCTION)

一. 如下图所示：

1. PE袋包装的产品，把产品放入PE内封好；有接地片的产品等中箱内要放气泡袋增加防护。
2. 如有中箱，即中箱上贴“所需标签”。
3. TRAY盘/REEL盘/TUBE管等包装上贴“所需标签”.
4. 外箱侧面贴“所需标签”。
5. 如为无卤产品，要再贴HF标签.

REEL盘包装时：载带圆孔在前，载带出口在右侧顺时针方向，标签贴在靠近自己一面的REEL盘上。
(载带包装时一般前后各预留10个空穴以上等)

A：PE袋包装产品

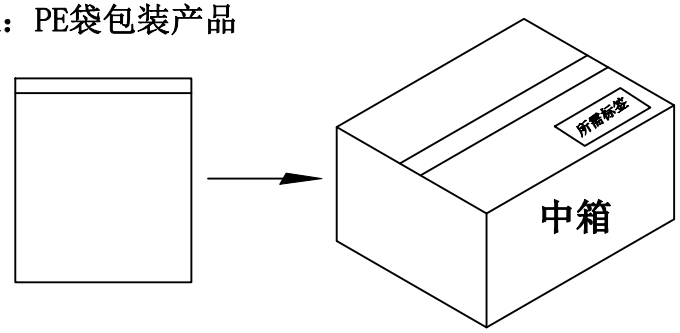

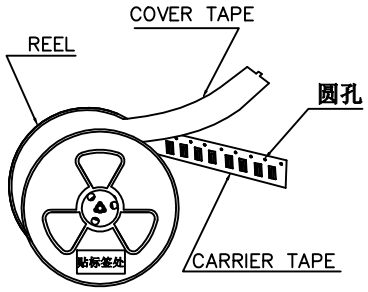

B：TRAY盘包装产品

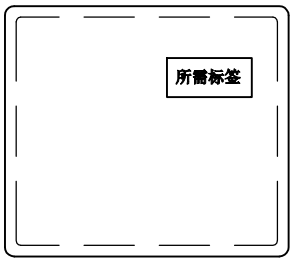

C：REEL盘包装产品

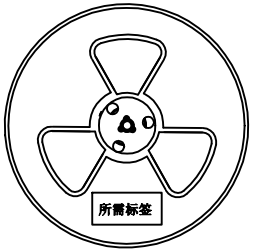

D：TUBE管包装产品

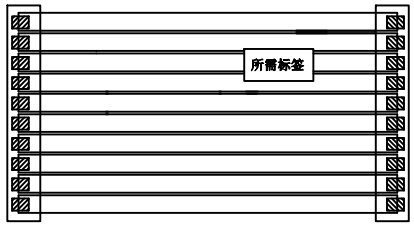

二 包装材料：

PE袋：	CEXXX	载带：	CAXXX
中箱：	CT027	上带：	CAHXX
外箱：	CT026(350*350*300)		
外箱：	CTXXX		
防水袋：	CE105		

PE袋包装
料号：M3962-4AC-A
MPQ: 1000 PCS
MOQ: 8000 PCS

备 注 (REMARK)

1. 若有未装满之零数箱，必须以缓冲材料纸带塞满.
2. 对于单个零数包装的产品，以最小包装方式出货，如多个零数产品，可以合理的放置在一个纸箱内出货，纸箱外作标示。

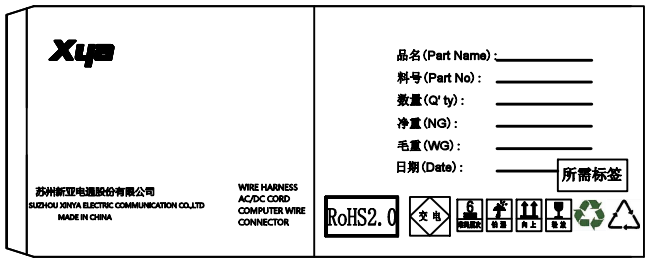

核 定		审 核		制 定	

PRODUCTION NAME： M3962-XX

1. **SCOPE** 应用范围

This product specification contains the test method, the general performance and requirement for 3.96mm pitch connector system.

2. REQUIREMENTS 必要条件

2.1. DESIGN AND CONSTRUCTION 设计规范

Product shall be of the design, construction and physical dimensions specified on the applicable product drawing.

2.2. MATERIALS 材质

A. Housing：Nylon66, UL 94V-0. White

B. Contact：Copper Alloy.

2.3. RATINGS 规格

A. Current Rating：7A

B. Voltage Rating：250V AC,

C. Operating temperature:：-25℃~ +85℃

2.4. LEAD FREE 无铅要求

A. Cd、 Pb、 Hg、 Cr^{6+}、 PBDE、 PBB…Heavy Metals Content
Refer to ROHS.

3. TEST CONDITION 测试条件

3.1. The product is designed to meet the electrical, mechanical and environmental performance requirements specified in Figure 1.

3.2. TEST REQUIREMENTS AND PROCEDURES SUMMARY

测试规格及测试条件

Items 测试项目	**Test conditions** 测试条件	**Criteria** 判定标准
ELECTRICAL 电气特性		
Contact Resistance 接触阻抗	EIA-RS-364-06A. Measure the electrical resistance across a pair of mated connector contacts.	10 mΩ max Initial 20 mΩ max Final
Insulation Resistance 绝缘阻抗	EIA-364-21B. Mate connectors and apply a voltage of 500V DC between adjacent terminals and terminals on opposite sides.	1000 MΩ min Initial 1000 MΩ min Final
Dielectric Withstanding Voltage 耐电压	EIA-364-20A. Method B. Apply 1000V AC for 1 minute between adjacent terminals and terminals on opposite sides of connectors	No evidence of break-down and flashover
MECHANICAL 机械特性		
Terminal crimp tensile strength	When crimp AWG#16 size wire When crimp AWG#18 size wire When crimp AWG#20size wire When crimp AWG#22 size wire	More than 110N More than 90N More than 70N More than 50N
Contact Retention Force 保持力	Pull contact at rate of 25mm/minute from housing	25N min per contact
Insertion Force 插入力	Plug insert into socket shall be an alignment at a constant speed of 25mm/minute.	25N max per contact
Withdrawal Force 拔出力	Plug pull out socket shall be an alignment at a constant speed of 25mm/minute.	3.0N min per contact
ENVIRONMENTAL 环境测试		
Durability 耐久性	EIA-364-09. The sample should be mounted in the tester and fully mated and unmated 30 cycles specified at the rate of 25mm/min	See Note 20 mΩ max Final
Vibration 振动测试	EIA-364-28. Vibration frequency range:10-55-10 Hz / min. Amplitude: 1.52mm Period: 2 hours for each direction X, Y, Z-axis.(2 hours in total)	No electrical discontinuity greater than 1 microseconds Shall occur.
Humidity 恒温恒湿	EIA-364-31A, Method II, Condition A. Temperature：40 ±2℃ Humidity：90 ~ 95 % (RH) Period：96 hours(measurement shall be made within 1 h after that. Water drops shall be removed.)	See Note 20 mΩ max

Thermal Shock 冷热冲击	EIA-364-32B, Condition I. One cycle consists of： -25℃ for 30 minutes. +85℃ for 30 minutes. Times of cycle：5 cycles.	See Note 20 mΩ max
Salt Spray 盐雾试验	EIA-364-26A, Temperature：35 ±2℃ Salt solution：5 ±1℃(solids by mass) Duration：24 ±1h (After the test, salt deposit shall be removed in running water.)	20 mΩ max
Resistance to soldering heat 耐焊接热	Lead-Free process Soldering temperature：260±5℃ Immersing time：10±0.5sec	NO damage
Temperature Life 老化试验	EIA-364-17A, method A Condition 4. Expose a pair of mated connectors to 85+/-2℃ for 96 hours.	See Note 20 mΩ max
Solderability 沾锡性	EIA-364-52 Soldering temperature：245 ±5℃ Immersing time：4~5sec	More than 95% of immersed part shall be covered with solder.

Figure 1

NOTE：Shall meet visual requirements , show no physical damages.

3.3. **PRODUCT QUALIFICATION AND REQUALIFICATION TEST SEQUENCE** 测试群组与顺序

Test or Examination 测试或检查项目	Test Group 测试群组								
	A	B	C	D	E	F	G	H	I
	Test Sequence (a) 测试顺序								
Examination of Product 尺寸量测	1	1	1,5	1,5	1,5	1,7	1,5	1,5	1,3
Contact Resistance 接触阻抗			2,4	2,4	2,4		2,4	2,4	
Insulation Resistance 绝缘阻抗						2,6			
Dielectric Withstanding Resistance 耐电压						3,5			
Contact Retention Force 保持力	2								
Insertion Force 插入力		2							
Withdrawal Force 拔出力		3							
Durability 耐久性			3						
Vibration 振动测试				3					
Humidity 恒温恒湿					3				
Thermal Shock 冷热冲击						4			
Salt Spray 盐雾试验							3		
Temperature Life 老化试验								3	
Solderability 沾锡性									2

Figure 2

NOTE：(a)Numbers indicate sequence in which tests are performed

4. Storage: 贮存

(1) TEMPERATURE; -10°C~+40°C
Relative humidity : <=80%
Not to storange in corrosive environments
包装完毕的连接器应在环境温度为-10℃~+40℃, 相对湿度不大于80%，周围空气中没有酸性，碱性及其它腐蚀性气体的库房中贮存。

(2)Re-qualification test shall be conducted immediately while the storage duration exceed 6 months
贮存期为 6 个月，超过 6 个月需重新检查。

Component - Plastics **E211125**

NANJING JULONG ENGINEERING PLASTICS CO LTD

NANJING NEW & HIGH TEC IND & DEV ZONE, 8 LONGITUDE RD, NANJING JIANGSU 210061 CN

AR0G, ARO, ARO-S02

Polyamide 66 (PA66), "Wondel", furnished as pellets

Color	Min Thk (mm)	Flame Class	HWI	HAI	RTI Elec	RTI Imp	RTI Str
NC, BK	0.8	V-0	-	-	65	65	65
	3.4	V-0	-	-	65	65	65

Comparative Tracking Index (CTI):	-	Dimensional Stability (%):	-
High-Voltage Arc Tracking Rate (HVTR):	-	High Volt, Low Current Arc Resis (D495):	-
Dielectric Strength (kV/mm):	-	Volume Resistivity (10xohm-cm):	-

UL94 small-scale test data does not pertain to building materials, furnishings and related contents. UL94 small-scale test data is intended solely for determining the flammability of plastic materials used in the components and parts of end-product devices and appliances, where the acceptability of the combination is determined by ULI.

Report Date: 2000-07-26
Last Revised: 2006-06-27

Underwriters Laboratories Inc®

IEC and ISO Test Methods

Test Name	Test Method	Units	Thickness Tested (mm)	Value
IEC Flammability	IEC 60695-11-10	Class (color)	0.8	V-0 (NC, BK)
			3.4	V-0 (NC, BK)
Glow-Wire Flammability (GWFI)	IEC 60695-2-12	C	-	-
Glow-Wire Ignition (GWIT)	IEC 60695-2-13	C	-	-
IEC Comparative Tracking Index	IEC 60112	Volts (Max)	-	-
IEC Ball Pressure	IEC 60695-10-2	C	-	-
ISO Heat Deflection (1.80 MPa)	ISO 75-2	C	-	-
ISO Tensile Strength	ISO 527-2	MPa	-	-
ISO Flexural Strength	ISO 178	MPa	-	-
ISO Tensile Impact	ISO 8256	kJ/m2	-	-
ISO Izod Impact	ISO 180	kJ/m2	-	-
ISO Charpy Impact	ISO 179-2	kJ/m2	-	-

Safety data sheet
Wodel® AR0G

1. Substance/preparation and company identification

Company:

Nanjing Julong Engineering Plastics Co.,LTD
Add: NO.8 JULONG ROAD,NANJING NEWHIGH TECHNOLOGY LNDUSTRIAL DEVELOPMENT ZONE
CHINA,210061
Tel:+86(0)25-58647431
Fax: +86(0)25-58746904

Molecular formula: ： $[NH（CH_2）_6\text{-}NHCO(CH_2)_4CO]_n$
Chemical family: additives, flameproofing agent, nitrogenous compounds
Synonyms: Copolyamide of Nylon 66.

2. Composition/information on ingredients

CAS Number	Content (W/W)	Chemical name
32131-17-2	86%	Polyhexamethylene adipamide (PA 66)
37640-57-6	13%	Melamine cyanurate
	1%	Further Additives, not to declare

3. Hazard identification

Emergency overview

CAUTION: MAY CAUSE EYE, SKIN AND RESPIRATORY TRACT IRRITATION.

INGESTION MAY CAUSE GASTRIC DISTURBANCES.

Use with local exhaust ventilation.

Wear a particulate respirator.

Wear protective clothing.

Eye wash fountains and safety showers must be easily accessible.

Potential health effects

Primary routes of exposure

Routes of entry for solids and liquids include eye and skin contact, ingestion and inhalation. Routes of entry for gases include inhalation and eye contact. Skin contact may be a route of entry for liquified gases.

Acute toxicity:

Contact with molten product may cause thermal burns.

Information on: Caprolactam

Workers who were exposed to caprolactam vapors have complained of

nervousness, heartburn, a heavy feeling in the stomach, stuffy nose and head, nosebleeds, a bitter taste, and dry, splitting lipsand nose. Acute overexposure to caprolactam may cause CNS effects, including respiratory stimulation, mild circulatory depression, and convulsions. Inhalation of dusts in rats at 30 or 100 ppm has been shown to produce fetotoxicity.

Workers who were exposed to caprolactam vapors have complained of nervousness, heartburn, a heavy feeling in the stomach, stuffy nose and head, nosebleeds, a bitter taste, and dry, splitting lips and nose. Acute overexposure to caprolactam may cause CNS effects, including respiratory stimulation, mild circulatory depression, and convulsions. Inhalation of dusts in rats at 30 or 100 ppm has been shown to produce fetotoxicity.

Irritation:

Irritation is possible when the product comes in contact with the skin, respiratory tract or the eyes.

4. First-aid measures

General advice:

Remove contaminated clothing.

If inhaled:

Remove the affected individual into fresh air and keep the person calm. Assist in breathing if necessary.

Immediate medical attention required.

If on skin:

Burns caused by molten material require hospital treatment.

If in eyes:

In case of contact with the eyes, rinse immediately for at least 15 minutes with plenty of water. If irritation develops, seek medical attention.

If swallowed:

Rinse mouth and then drink plenty of water. Induce vomiting. Never induce vomiting or give anything by mouth if the victim is unconscious or having convulsions.

Immediate medical attention required.

5. Fire-fighting measures

Flash point		No data available.
Autoignition	> 400 ℃	(ASTM D1929)

Suitable extinguishing media:

water, foam, dry extinguishing media

Hazards during fire-fighting:
carbon monoxide, hydrogen cyanide, can be emitted at > 300℃
Formation of further decomposition and oxidation products depends upon the fire conditions. Under special fire conditions traces of other toxic substances are possible.
Protective equipment for fire-fighting:
Firefighters should be equipped with self-contained breathing apparatus and turn-out gear.
Further information:
Dispose of fire debris and contaminated extinguishing water in accordance with official regulations.

6. Accidental release measures

Cleanup:
For small amounts: Pick up with suitable appliance and dispose of.
For large amounts: Pick up with suitable appliance and dispose of.
Further information:
High risk of slipping due to leakage/spillage of product.

7. Handling and storage

Handling
Protection against fire and explosion:
Take precautionary measures against static discharges.
Storage
General advice:
Keep container tightly closed.
Storage stability:
Protect against moisture.

8.personal protection

Respiratory protection:
Wear a NIOSH-certified (or equivalent) particulate respirator. Wear respiratory protection if ventilation is inadequate. Wear a NIOSH-certified (or equivalent) organic vapour/particulate respirator. Do not exceed the maximum use concentration for the respirator facepiece/cartridge combination.
Hand protection:
Wear gloves to prevent contact during mechanical processing and/or hot melt conditions.

Eye protection:
Tightly fitting safety goggles (chemical goggles).
General safety and hygiene measures:
Wear protective clothing to prevent contact during mechanical processing and/or hot melt conditions. Avoid inhalation of dust. Wash soiled clothing immediately.

9. Physical and chemical properties

Form:	granules	
Odour:	odourless	
Colour:	various, depending on the colourant	
pH value:		No data available.
Melting temperature:	approx. 258℃	(DIN 53736)
Density:	1.15-1.18g/cm^3	(20℃)(EN/ISO 1183-1)

Solubility in water: insoluble

10. Stability and reactivity

Decomposition products:
Hazardous decomposition products: carbon monoxide, hydrogen cyanide
Thermal decomposition: > 300 ℃

11. Toxicological information

Chronic toxicity
Other information:
Based on our experience and the information available, no adverse health effects are expected if handled as recommended with suitable precautions for designated uses.

12. Ecological information

Environmental fate and transport
Biodegradation:
Evaluation: Experience shows this product to be inert and non-degradable.
Bioaccumulation:
The product will not be readily bioavailable due to its consistency and insolubility in water..
Due to the consistency of the product, dispersion into the environment is impossible. Therefore no negative effects on the environment may be anticipated based on the present state of knowledge.

13. Disposal considerations

Waste disposal of substance:
Check for possible recycling.
May be disposed of or combusted with domestic refuse according to local regulations.

Contaminated packaging:
Packs must be completely emptied. Completely emptied packagings can be given for recycling.

14. Transport information

Reference Bill of Lading

15. Regulatory information

CAS Number Chemical name State RTK
105-60-2 caprolactam MA, NJ, PA

16. Other information

Prepared by the Solutia Hazard Communication Group.
This product may contain other copolymers, colour additives, heat stabilizers, flame retardants and/or other performance additives. Under normal use conditions, these additives are contained within the polymer matrix and occupational exposures are expected to be minimal.

产品性能参数 AR0G

Wondel®

项目	测试标准	测试参数	典型性能	单位
机械性能				
拉伸强度	ISO 527	I 型样条，50mm/min	75	MPa
拉伸模量	ISO 527	I 型样条，1mm/min	-	MPa
断裂伸长率	ISO 527	I 型样条，50mm/min，标距 50mm	4	%
弯曲强度	ISO 178	23℃，20mm/min	100	MPa
		-20℃，20mm/min	-	MPa
弯曲模量	ISO 178	23℃，2mm/min	3000	MPa
悬臂量缺口冲击强度	ISO 180	23℃	4.0	KJ/m^2
		-20℃	-	KJ/m^2
简支梁无缺口冲击强度	ISO179	23℃	70	KJ/m^2
洛氏硬度	ISO2239/2	6mm，R 标尺	120	HHR
热性能				
热变形温度	ISO75	0．45MPa，3.2mm,100mm 跨距	210	℃
		1．80MPa，3.2mm,100mm 跨距	70	℃
维卡软化点	ISO306		-	℃
熔点	ISO3416		258	℃
相对温度指数	UL746B	热性能	-	℃
		机械性能	-	℃
物理性能				
密度	ISO1183		1.14	g/cm^3
灼烧残余	ISO1172	620℃	-	%
吸水率	ISO62		7.5	%
熔体流动速率	IS01133	275 ℃，0.325 Kg	-	g/10min
模塑收缩率	GB/T15585	平行方向	1.0	%
		垂直方向	1.4	%
电性能				
表面电阻率	IEC 60093		10^{13}	Ω
体积电阻率	IEC 60093	3mm	10^{15}	Ω · cm
介电强度	IEC 60243		27	KV/mm
漏电起痕指数	IEC112		500	V
阻燃性能				
UL 垂直燃烧试验	UL-94	3．2mm	V0	级
		1．6mm	V0	级
UL 水平燃烧实验	UL-94		-	级
氧指数	ISO4589		-	%

boway 博威合金
股票代码:601137

宁波博威合金材料股份有限公司
NINGBO POWERWAY ALLOY MATERIAL CO.,LTD.
产 品 检 测 报 告 单CERTIFICATE OF TEST

顾客名称(CUSTOMER)：台聘精密电子元件(昆山)有限公司

产品名称 Description	规格Size(mm)	状态Temper	执行标准Specification	批号lot number	检测日期
H65A	φ1.72	M	Q/NPW003-2006	2122008221-21092260	2020-9-26

化学成分Chemical Composition(%)

元素Element	Cu	Pb	Fe	Zn	Ni	Hg(%)	Cr6+(%)	Cd(%)	
CAS编号	7440-50-8	7439-92-1	7439-89-6	7440-66-6	7440-02-0	7439-97-6	7440-47-3	7440-43-9	
标准要求 Test Spec.	63.0-68.5	Max.0.09	Max.0.07	REM	---	---	---	---	
检测结果 Test Result	64.15	0.0025	0.0027	REM	0.0018	N.D	N.D	0.0002	

力学性能Mechanical Properties

检测项目 Test Item	抗拉强度Tensile Strength (Mpa)	断后伸长率Elongation (%)	
检测结果 Test Result	416	32	

其它要求Size.Variations.Appearance

检测项目 Test Item	尺寸公差Size.Variations (mm)	表面质量Appearance
检测结果 Test Result	OK	OK

检验员(checker)：　质量主管Manager:　产品合格专用章(badge)　签发日期：2020-9-26

PWHJ/FM-P26.5-B