Pin 6

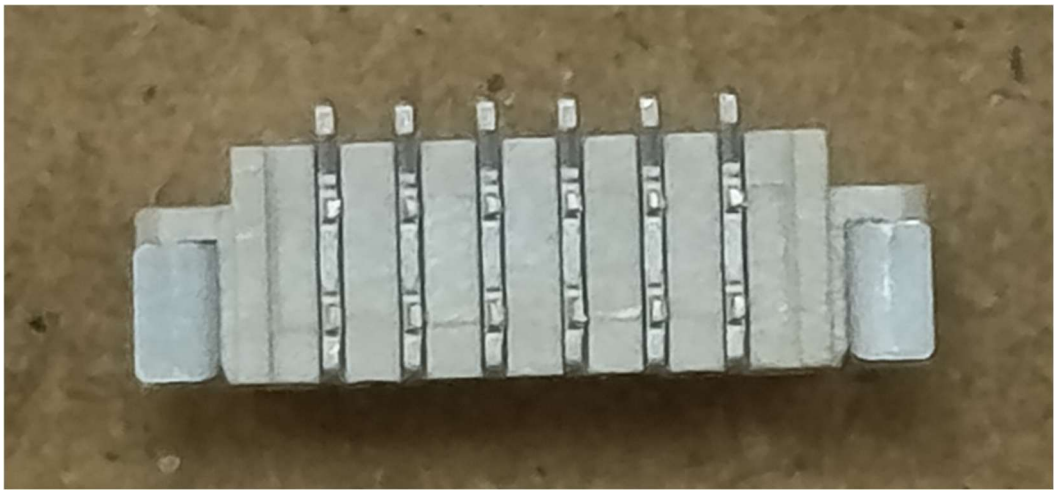

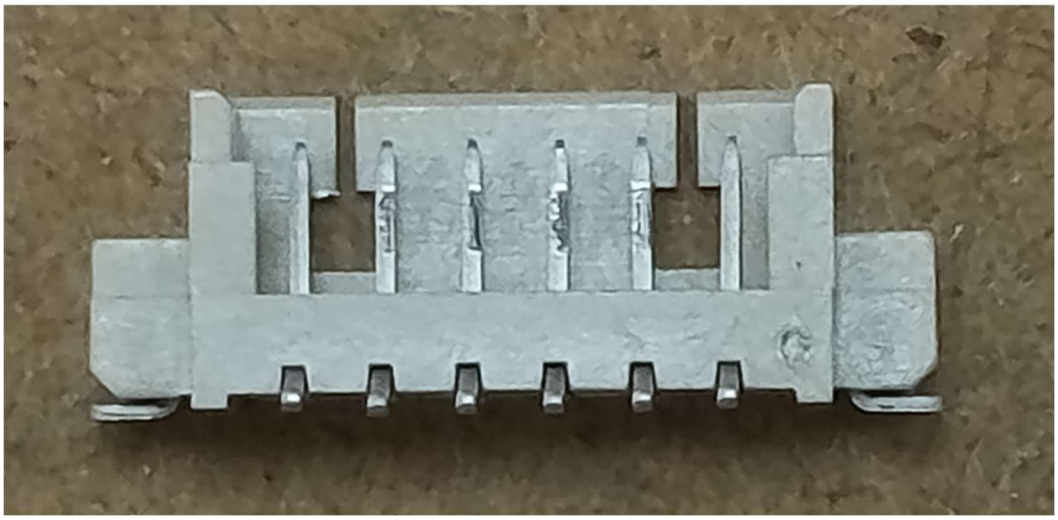

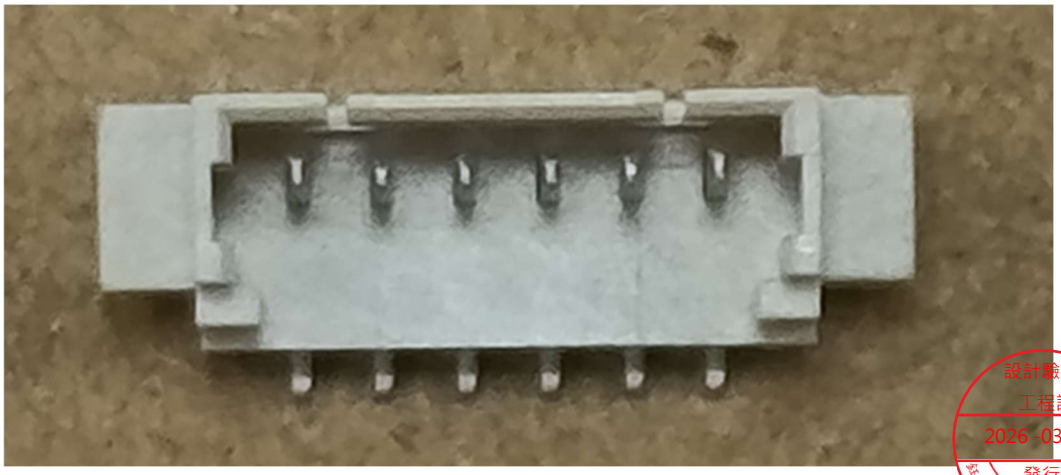

設計驗證
工程課
2026-03-26
發行
鈺緯科技開發股份有限公司

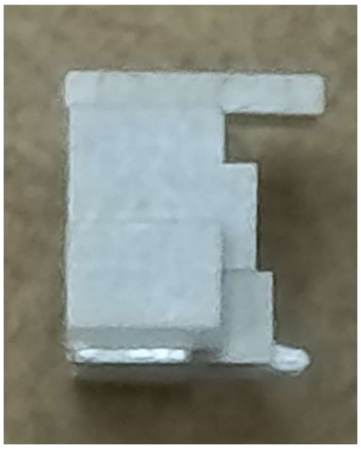

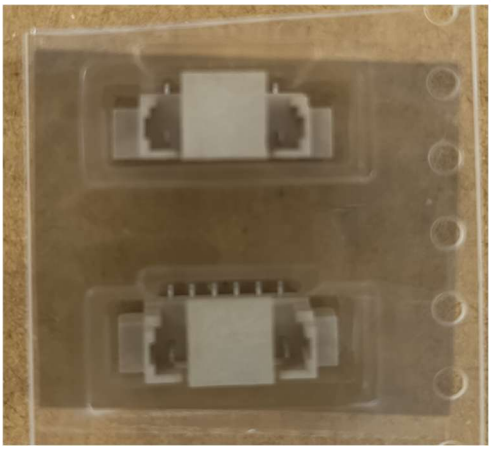

Xya 新亚 Electric Communication

SPECIFICATION FOR APPROVAL

承認書

Customer Name	DIVA
Description	1.25mm Pitch Connector
XINYA P/N	3FMxxx08920(F0336)
Customer P/N	S1311-xxSWA-S02-R
Designed by	张福康
Checked by	李政达
Approved by	金卫星
DATE	2026.03.11

CUSTOMER SIGNATURE		
Prepared By	Checked By	Approved By
		設計驗證 工程課 2026 -03- 26 發行

PLEASE RETURN TO US ONE COPY OF SPECIFICATION FOR APPROVAL WITH YOUR APPROVED SIGNATURES.

苏州新亚电通股份有限公司

SUZHOU XINYA ELECTRIC COMMUNICATION CO., LTD.

COMPONENT SPEC VERSION RECORD

CUSTOMER PART NO.	3FMxxx08920	XINYA PART NO.	S1311-xxSWA-S02-R

VER	MINUTE OF CHANGES	XINYA CHECK	RELEASE DATE
A	CHECKED AND RELEASED	金卫星	Mar-11-26

版本 REV.	日 期 DATE	DCN NO.	变更内容 DESCRIPTION	制图 DRAWN

成品规格图号DRAWING NO. S1311008S

No. of Contacts	DIMENSIONS				
	A	B	C	D	E
2	1.25	7.25	3.05	2.35	4.25
3	2.50	8.50	4.30	3.60	5.50
4	3.75	9.75	5.55	4.85	6.75
5	5.00	11.00	6.80	6.10	8.00
6	6.25	12.25	8.05	7.35	9.25
7	7.50	13.50	9.30	8.60	10.50
8	8.75	14.75	10.55	9.85	11.75
9	10.00	16.00	11.80	11.10	13.00
10	11.25	17.25	13.05	12.35	14.25
11	12.50	18.50	14.30	13.60	15.50
12	13.75	19.75	15.55	14.85	16.75
13	15.00	21.00	16.80	16.10	18.00
14	16.25	22.25	18.05	17.35	19.25
15	17.50	23.50	19.30	18.60	20.50

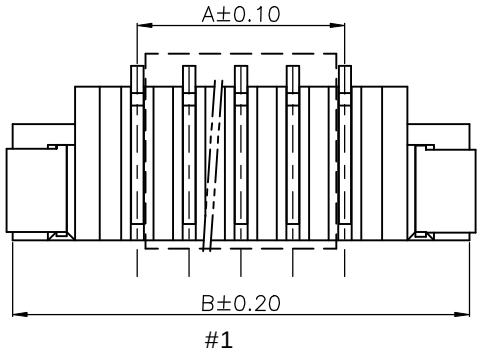

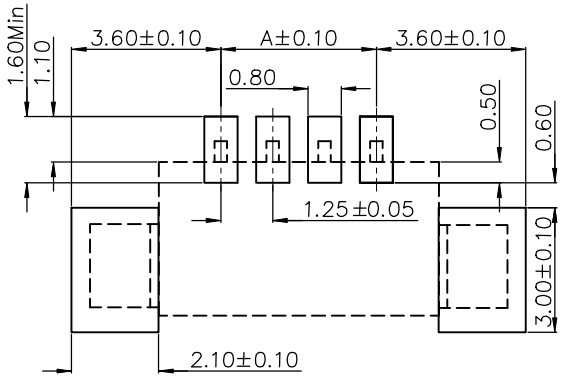

Ordering Code:

S1311 – XX S XX – S 0 2 – X X
① ② ③ ④ ⑤ ⑥ ⑦

① Series NO.

② Circuits number

③ S:straight angle

④ Plating Code:

⑤ Color is Natural

⑥ Packing:
Null:Tube
K:Reel
R:Reel+PAD

⑦ NONE: Halogen Part
H: Halogen Free Part

Definition			Code
◎Tin plated:			VA
◎Matte Tin plated:			WA
◎Gold plated:			
flash	VB	15u"	VF
10u"	VE	30u"	VJ
◎Duplex plating :			
flash	VK	15u"	VP
10u"	VN	30u"	VU
◎Standard: B Prefix "V" "W" means lead free plating			

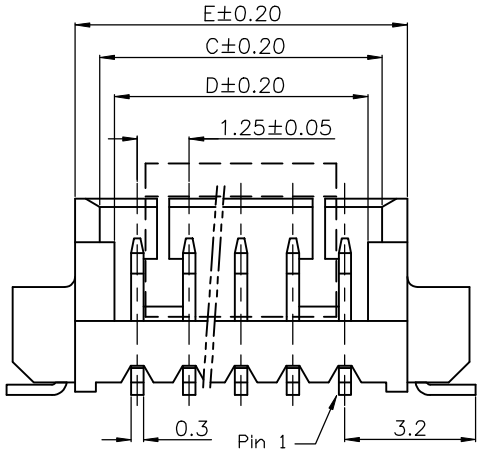

RECOMMANDED PCB LAYOUT

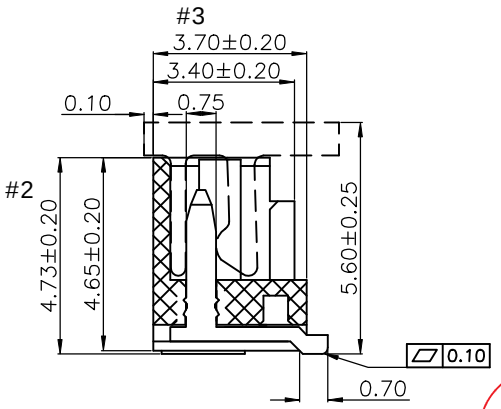

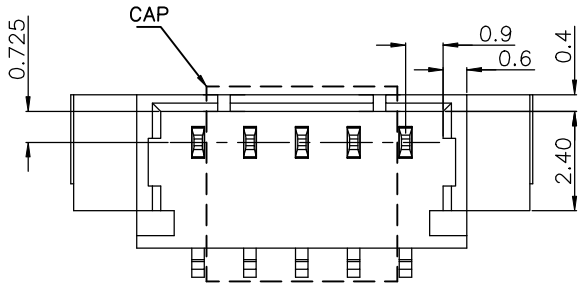

NOTES:
1.Voltage rating: AC 125V DC
2.Current rating: AC,DC,1A
3.withstand voltage: AC 250V/min
4.Insulation resistance: 100M ohm min.
5.Temperature range: -25°C~+85°C
6.Contact resistance: 20m ohm max.
7.Material:
Housing: LCP , UL94 V-0. Color Natural
Contact: Brass/Gold or 100u" Min. Tin;
50u" Min. Ni-plated
Solder Tabs: Brass/Gold or 100u" Min. Tin;
50u" Min. Ni-plated

設計驗證 工程課 2026-03-26 發行

GENERL TOLERANCE		制 图 (DR.)		料 号 PART NO.	S1311-XXSXX-S02-XX	版 本 REV.	A
X.±0.30	X.°±2°	审 核 (CHK.)		品 名 TITLE	1.25 PITCH CONNECTOR	页 次 SHEET	1/1
.X±0.25	.X°±1°	核 准 (APPD.)		客户料号 CUTM.NO.	3FMxxx08920(F0336)		
.XX±0.20	.XX°±0.5°	第1版 (OR.D.)	2012.10.09				
.XXX±0.10	.XXX°±0.5°	单 位 UNITS	MM 比 例 SCALE 1:1				

苏州新亚电通股份有限公司
SUZHOU XINYA ELECTRIC COMMUNICATION Co.,LTD.

苏州新亚电通股份有限公司 包装作业规范

文件编号	MPXXXX	适用产品	DIVA系列类产品包规	页次	1/1	版别	A

包装作业图示及说明 (PACKING OPERATION DIAGRAM & INSTRUCTION)

一. 如下图所示：

1. PE袋包装的产品，把产品放入PE内封好；有接地片的产品等中箱内要放气泡袋增加防护。
2. 如有中箱，即中箱上贴“所需标签”。
3. TRAY盘/REEL盘/TUBE管等包装上贴“所需标签”.
4. 外箱侧面贴“所需标签”。
5. 如为无卤产品，要再贴HF标签.

REEL盘包装时：载带圆孔在前，载带出口在右侧顺时针方向，标签贴在靠近自己一面的REEL盘上。
(载带包装时一般前后各预留10个空穴以上等)

A：PE袋包装产品

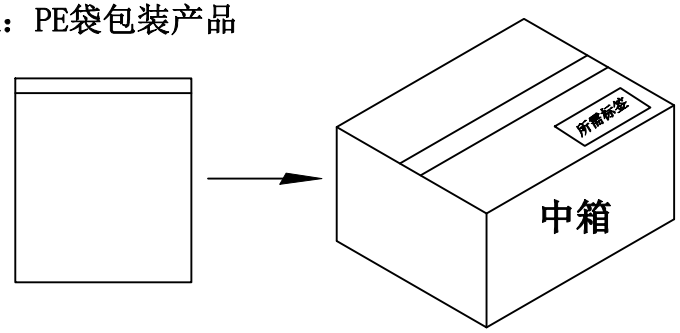

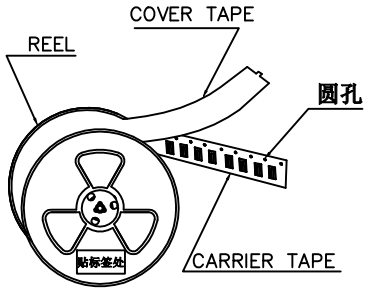

B：TRAY盘包装产品

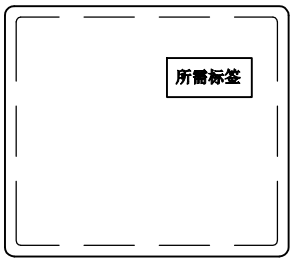

C：REEL盘包装产品

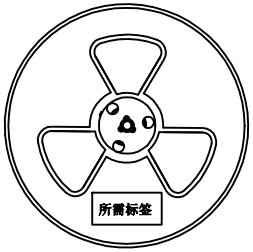

D：TUBE管包装产品

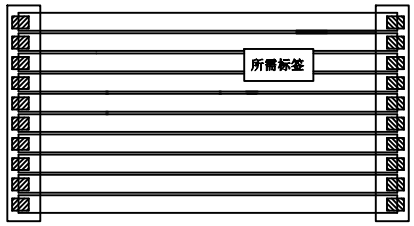

二 包装材料：

PE袋：	CEXXX	载带：	CAXXX
中箱：	CT027	上带：	CAHXX
外箱：	CT026(350*350*300)		
外箱：	CTXXX		
防水袋：	CE105		

REEL盘包装
料号：S1311-06SWA-S02-R
MPQ: 900 PCS
MOQ: 7200 PCS

备 注 (REMARK)

1. 若有未装满之零数箱，必须以缓冲材料纸带塞满.
2. 对于单个零数包装的产品，以最小包装方式出货，如多个零数产品，可以合理的放置在一个纸箱内出货，纸箱外作标示。

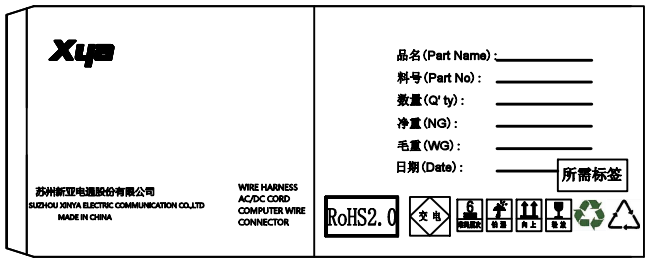

核 定		审 核		制 定	

版本 REV.	日 期 DATE	DCN NO.	变更内容 DESCRIPTION	制图 DRAWN

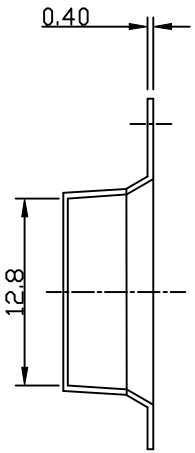

SECTION B-B

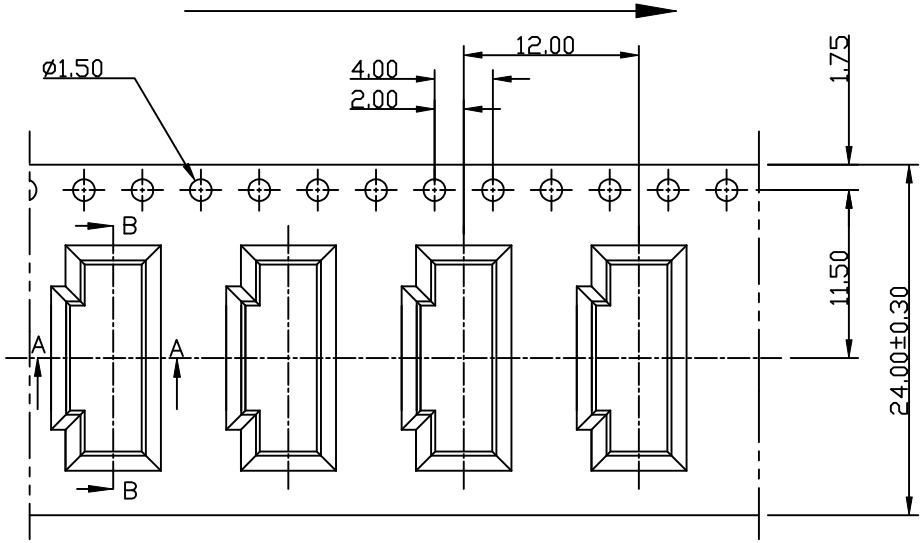

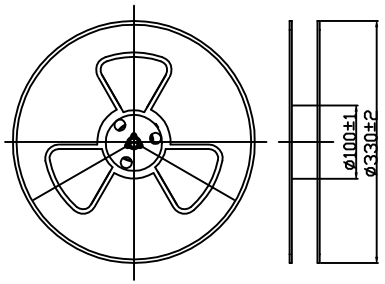

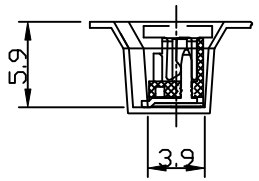

SECTION A-A

Note:
1. 搭配成品为：S1311-06S**XX**-SX2-RX
2. 一小卷可装900PCS成品。

RoHS

GENERL TOLERANCE		制 图 (DR.)	吕华阳	料 号 PART NO.	CA034	版 本 REV.	A
X.±0.30	X.°±4°	审 核 (CHK.)		品 名 TITLE	载带	页 次 SHEET	1/1
.X±0.25	.X°±3°	核 准 (APPD.)	金卫星	客户料号 CUTM.NO.			
.XX±0.20	.XX°±2°	第1版 (OR.D.)	2025.11.24				
.XXX±	.XXX°±	单 位 UNITS	MM 比 例 SCALE 1:1				

苏州新亚电通股份有限公司
SUZHOU XINYA ELECTRIC COMMUNICATION Co. LTD.

PRODUCTION NAME：S1311

1. SCOPE 应用范围

This product specification contains the test method, the general performance and requirement for 1.25mm pitch connector system.

2. REQUIREMENTS 必要条件

2.1. DESIGN AND CONSTRUCTION 设计规范

Product shall be of the design, construction and physical dimensions specified on the applicable product drawing.

2.2. MATERIALS 材质

A. Housing：LCP, UL 94V-0.Natural

B Contact：Copper Alloy.

2.3. RATINGS 规格

A. Current Rating：1A

B. Voltage Rating：125V AC/DC

C. Operating temperature:：-25℃~ +85℃

2.4. LEAD FREE 无铅要求

A. Cd、 Pb、 Hg、 Cr^{6+}、 PBDE、 PBB…Heavy Metals Content
Refer to ROHS.

1. TEST CONDITION 测试条件

3.1. The product is designed to meet the electrical, mechanical and environmental performance requirements specified in Figure 1.

3.2 TEST REQUIREMENTS AND PROCEDURES SUMMARY

测试规格及测试条件

Items 测试项目	**Test conditions** 测试条件	**Criteria** 判定标准
ELECTRICAL 电气特性		
Contact Resistance 接触阻抗	Measure the electrical resistance across a pair of mated connector contacts.	20 mΩ max Initial 40 mΩ max Final
Insulation Resistance 绝缘阻抗	Apply voltage of 500V DC between adjacent terminals.	100 MΩ min Initial 100 MΩ min Final
Dielectric Withstanding Voltage 耐电压	Apply250V AC for 1 minute between adjacent terminals.	No evidence of break-down and flashover
MECHANICAL 机械特性		
Contact Retention Force	Pull terminals from hosing at maximum rate of 25 ±3mm/minute.	0.3Kgf per contact
Insertion force	Plug insert into socket shell be an alignment at a constant speed of 25mm/minute.	SEE NOTE2
Withdrawal force	Plug pull out socket shell be an alignment at a constant speed of 25mm/minute.	
ENVIRONMENTAL 环境测试		
Durability 耐久性	Connector shall be subjected to 30 cycles of Insertion and withdrawal	See Note Contact Resistance: 40 mΩ max Final
Vibration 振动测试	Vibration frequency range:10-55-10 Hz / min. Amplitude: 1.52mm Period: 2 hours for each direction X, Y, Z-axis.(2 hours in total)	No damage Discontinuity: 1 microsecond max.
Humidity 恒温恒湿	Temperature：40 ±2℃ Humidity：90 ~ 95 % (RH) Period: 96 hours (Measurement must be taken within 1 h after that. Water drops shall be removed.)	See Note Contact Resistance: 40 mΩ max
Thermal Shock 冷热冲击	One cycle consists of： (1) -25℃ for 30 minutes. (2) +85℃ for 30 minutes. Times of cycle：5 cycles.	See Note Contact Resistance: 40 mΩ max

Salt Spray 盐雾试验	Temperature：35 ±2℃ Salt solution：5 ±1% Duration：24 ±1h (After the test, salt deposit shall be removed in running water.)	40mΩmax
Resistance to soldering heat 耐焊接热	Lead-Free process Soldering temperature：260±5℃ Immersing time：10±0.5sec	NO damage
Temperature Life 老化试验	Expose a pair of mated connectors to 85+/-2℃ for 96 hours.	See Note Contact Resistance: 40 mΩ max
Solder ability 沾锡性	Soldering temperature：245 ±5℃ Immersing time：4~5sec	More than 95％ of immersed part shall be covered with solder.

Figure 1

NOTE 1：Shall meet visual requirements, show no physical damages.

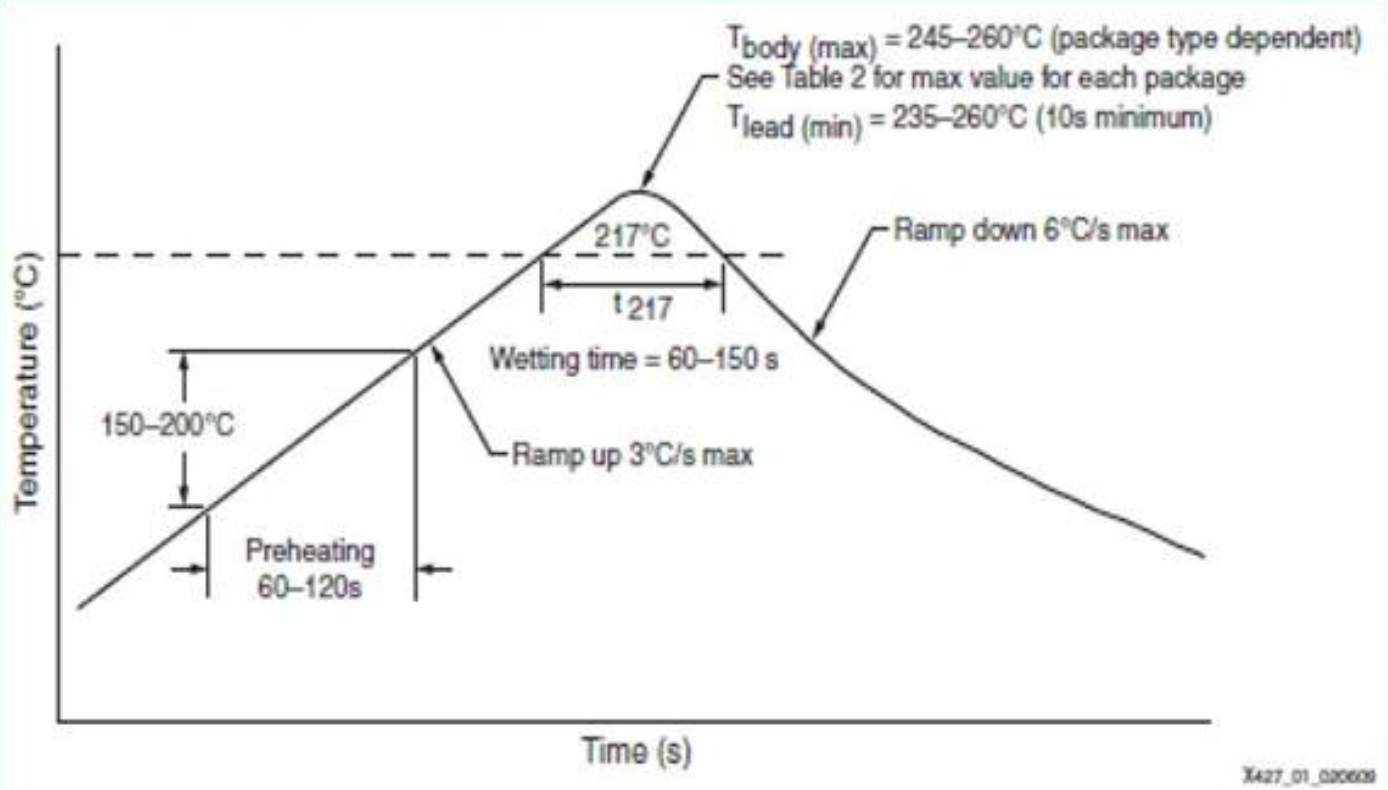

Figure 1: **Typical Conditions for Pb-Free Reflow Soldering**

3.3. PRODUCT QUALIFICATION AND REQUALIFICATION TEST

SEQUENCE 测试群组与顺序

Test or Examination 测试或检查项目	Test Group 测试群组								
	A	B	C	D	E	F	G	H	I
	Test Sequence (a) 测试顺序								
Examination of Product 尺寸量测	1	1	1,5	1,5	1,5	1,7	1,5	1,5	1,3
Contact Resistance 接触阻抗			2,4	2,4	2,4		2,4	2,4	
Insulation Resistance 绝缘阻抗						2,6			
Dielectric Withstanding Resistance 耐电压						3,5			
Contact Retention Force 保持力	2								
Insertion Force 插入力		2							
Withdrawal Force 拔出力		3							
Durability 耐久性			3						
Vibration 振动测试				3					
Humidity 恒温恒湿					3				
Thermal Shock 冷热冲击						4			
Salt Spray 盐雾试验							3		
Temperature Life 老化试验								3	
Solder ability 沾锡性									2

Figure 2

NOTE：Numbers indicate sequence in which tests are performed

4.storage: 贮存

(1) TEMPERATURE; -10° C~+40° C,Relative humidity : <=80%,
Not to storange in corrosive environments
包装完毕的连接器应在环境温度为-10° C~+40° C, 相对湿度不大于 80%，周围空气中没有酸性，碱性及其它腐蚀性气体的库房中贮存。

(2)Re-qualification test shall be conducted immediately while the storage duration exceed 6 months
贮存期为 6 个月，超过 6 个月需重新检查。

NOTE 2：Insertion force/ Withdrawal force

No. of CKT	Insertion force (Kg MAX.)		Withdrawal force(Kg MIN.)	
	1st	30th	1st	30th
2	2.00	1.60	0.28	0.18
3	2.50	2.10	0.30	0.20
4	3.00	2.60	0.33	0.23
5	3.50	3.10	0.38	0.28
6	4.00	3.60	0.43	0.33
7	4.50	4.10	0.48	0.38
8	5.00	4.60	0.53	0.43
9	5.50	5.10	0.56	0.46
10	6.00	5.60	0.59	0.49
11	6.50	6.10	0.62	0.52
12	7.00	6.60	0.65	0.55
13	7.50	7.10	0.68	0.58
14	8.00	7.60	0.71	0.61
15	8.50	8.10	0.74	0.64

E471i(+6), E471i(6+) ECO-B(S)

Yellow Card™

CELANESE INTERNATIONAL CORP
VECTRA BUSINESS LINE
8040 DIXIE HWY
FLORENCE, KY 41042 United States

File Number: E83005

Vectra: E471i(+6), E471i(6+) ECO-B(S)

Liquid Crystal Polymer (LCP), thermotropic aromatic polyester, pellets

(+6) - Virgin and regrind up to 50% by weight incl. have the same basic material characteristics for colors natural and black at thicknesses of 0.75mm and above.
(S) - A 3-digit number indicating sustainability status
NOTE - Material designations may be suffixed by D-1, D-2, D-3 or two letters and a minimum of four numbers, indicating specific colors. These products are also produced and marketed by Ticona GmbH, Postfach 1561, 65444 Kelsterbach, Germany.

c UL us
ALSO CERTIFIED TO IEC REQUIREMENTS

Flammability	Value (English)	Value (SI)	Test Method
Flame Rating			UL 94 IEC 60695-11-10, -20
0.0059 in (0.150 mm), ALL	V-0	V-0	
0.015 in (0.38 mm), ALL	V-0	V-0	
0.030 in (0.75 mm), ALL	V-0	V-0	
0.06 in (1.5 mm), ALL	V-0	V-0	
0.12 in (3.0 mm), ALL	V-0	V-0	
Electrical	**Value (English)**	**Value (SI)**	**Test Method**
Hot-wire Ignition (HWI)			UL 746A
0.0059 in (0.150 mm)	PLC 5	PLC 5	
0.015 in (0.38 mm)	PLC 4	PLC 4	
0.030 in (0.75 mm)	PLC 3	PLC 3	
0.06 in (1.5 mm)	PLC 3	PLC 3	
0.12 in (3.0 mm)	PLC 1	PLC 1	
High Amp Arc Ignition (HAI)			UL 746A
0.0059 in (0.150 mm)	PLC 0	PLC 0	
0.015 in (0.38 mm)	PLC 0	PLC 0	
0.030 in (0.75 mm)	PLC 0	PLC 0	
0.06 in (1.5 mm)	PLC 0	PLC 0	
0.12 in (3.0 mm)	PLC 0	PLC 0	
Comparative Tracking Index (CTI)	PLC 3	PLC 3	UL 746A
High Voltage Arc Tracking Rate (HVTR)	PLC 3	PLC 3	UL 746A
Arc Resistance	PLC 5	PLC 5	ASTM D495
Thermal	**Value (English)**	**Value (SI)**	**Test Method**
RTI Elec			UL 746B
0.0059 in (0.150 mm)	266 °F	130 °C	
0.015 in (0.38 mm)	266 °F	130 °C	
0.030 in (0.75 mm)	266 °F	130 °C	
0.06 in (1.5 mm)	266 °F	130 °C	
0.12 in (3.0 mm)	266 °F	130 °C	

Form Number: E83005-251024
UL LLC Copyright ©2025. All rights reserved. | www.ul.com
Report Date: 3/25/2003
Last Revised: 12/5/2024 8:56:50 AM

ANSI/UL 94 small-scale test data does not pertain to building materials, furnishings and related contents. ANSI/UL 94 small-scale test data is intended solely for determining the flammability of plastic materials used in the components and parts of end-product devices and appliances, where the acceptability of the combination is determined by UL.

Component - Plastics

E471i(+6), E471i(6+) ECO-B(S)

Thermal	Value (English)	Value (SI)	Test Method
RTI Imp			UL 746B
0.0059 in (0.150 mm)	266 °F	130 °C	
0.015 in (0.38 mm)	266 °F	130 °C	
0.030 in (0.75 mm)	266 °F	130 °C	
0.06 in (1.5 mm)	266 °F	130 °C	
0.12 in (3.0 mm)	266 °F	130 °C	
RTI Str			UL 746B
0.0059 in (0.150 mm)	266 °F	130 °C	
0.015 in (0.38 mm)	266 °F	130 °C	
0.030 in (0.75 mm)	266 °F	130 °C	
0.06 in (1.5 mm)	266 °F	130 °C	
0.12 in (3.0 mm)	266 °F	130 °C	
Restricted Substances	**Value (English)**	**Value (SI)**	**Test Method**
RoHS 2011/65/EU Material (Color: ALL)	+863 Compliant	+863 Compliant	UL 746R/IEC 62321
Non-Halogenated Material (Color: ALL)	Compliant	Compliant	UL 746H/C-IC
Certificate			

Form Number: E83005-251024

UL LLC Copyright ©2025. All rights reserved. | www.ul.com

Report Date: 3/25/2003
Last Revised: 12/5/2024 8:56:50 AM

ANSI/UL 94 small-scale test data does not pertain to building materials, furnishings and related contents. ANSI/UL 94 small-scale test data is intended solely for determining the flammability of plastic materials used in the components and parts of end-product devices and appliances, where the acceptability of the combination is determined by UL.

VECTRA® E471I VF2201 NATURAL

Version	Revision Date:	SDS Number:	Date of last issue: 2022/12/14
1.3	2025/07/25	000000035118	Date of first issue: 2019/05/03

1. PRODUCT AND COMPANY IDENTIFICATION

Product name : VECTRA® E471I VF2201 NATURAL
Product code : 000000000020003409

Manufacturer or supplier's details

Company : Celanese (Shanghai) International Trading Co., Ltd

Address : 4560 Jinke Road, Zhangjiang, Pudong
Shanghai, China 201210

Telephone : 86-21-38619288

Emergency telephone number : CHEMTREC International phone number: +1-703-527 3887, +86 532 8388-9090 (China, 24h)

E-mail address : HazCom@celanese.com

Recommended use of the chemical and restrictions on use

Recommended use : Plastic processing industry

2. HAZARDS IDENTIFICATION

Emergency Overview

Appearance : pellets
Odour : slight

Not a hazardous substance or mixture.

GHS Classification

Not a hazardous substance or mixture.

GHS label elements

Not a hazardous substance or mixture.

Physical and chemical hazards

Not classified based on available information.

Health hazards

Not classified based on available information.

Environmental hazards

Not classified based on available information.

Other hazards which do not result in classification

None known.

3. COMPOSITION/INFORMATION ON INGREDIENTS

Substance / Mixture : Mixture

Components

Chemical name	CAS-No.	Concentration (% w/w)
Glass, oxide, chemicals	65997-17-3	>= 10 -< 20
Talc (Mg3H2(SiO3)4)	14807-96-6	>= 10 -< 20

4. FIRST AID MEASURES

General advice : Do not leave the victim unattended.

If inhaled : If unconscious, place in recovery position and seek medical advice.
If symptoms persist, call a physician.

In case of skin contact : Cool skin rapidly with cold water after contact with molten material.
Do not peel solidified product off the skin.
Burns must be treated by a physician.

In case of eye contact : Remove contact lenses.
Protect unharmed eye.
If eye irritation persists, consult a specialist.

If swallowed : Keep respiratory tract clear.
Do NOT induce vomiting.
If symptoms persist, call a physician.

Most important symptoms and effects, both acute and delayed : None known.

Notes to physician : Treat symptomatically

5. FIREFIGHTING MEASURES

Suitable extinguishing media : Water
Foam
Dry chemical
Carbon dioxide (CO2)

Specific hazards during firefighting : Do not use a solid water stream as it may scatter and spread fire.

Hazardous combustion products : Carbon oxides
Nitrogen oxides (NOx)

Specific extinguishing methods : Standard procedure for chemical fires.
Use extinguishing measures that are appropriate to local

circumstances and the surrounding environment.

Special protective equipment for firefighters	:	Wear self-contained breathing apparatus for firefighting if necessary.

6. ACCIDENTAL RELEASE MEASURES

Personal precautions, protective equipment and emergency procedures	:	Avoid dust formation. Avoid breathing dust. Ensure adequate ventilation. Sweep up to prevent slipping hazard.
Environmental precautions	:	No special environmental precautions required.
Methods and materials for containment and cleaning up	:	Pick up and arrange disposal without creating dust. Sweep up and shovel. Keep in suitable, closed containers for disposal.

7. HANDLING AND STORAGE

Handling

Advice on protection against fire and explosion	:	During processing, dust may form explosive mixture in air. Provide appropriate exhaust ventilation at machinery and at places where dust can be generated.
Advice on safe handling	:	For personal protection see section 8. Smoking, eating and drinking should be prohibited in the application area. Minimize dust generation and accumulation.
Avoidance of contact	:	Not applicable

Storage

Conditions for safe storage	:	Keep in a dry, cool place. Maintain dryness of resin Electrical installations / working materials must comply with the technological safety standards.
Materials to avoid	:	No materials to be especially mentioned.
Further information on storage stability	:	No decomposition if stored and applied as directed.

8. EXPOSURE CONTROLS/PERSONAL PROTECTION

Components with workplace control parameters

Components	CAS-No.	Value type (Form of exposure)	Control parameters / Permissible concentration	Basis
Glass, oxide, chemicals	65997-17-3	TWA (fibres)	1 fibres per cubic centimeter	ACGIH
		TWA (Inhalable particulate matter)	5 mg/m3	ACGIH
Talc (Mg3H2(SiO3)4)	14807-96-6	PC-TWA (Total dust)	3 mg/m3	CN OEL
		PC-TWA (Respirable dust)	1 mg/m3	CN OEL
		TWA	0.1 fibres per cubic centimeter	ACGIH
		TWA (Respirable particulate matter)	2 mg/m3	ACGIH

Engineering measures : Local exhaust
Provide appropriate exhaust ventilation at places where dust is formed.

Personal protective equipment

Respiratory protection : No personal respiratory protective equipment normally required.

Eye/face protection : Safety glasses with side-shields

Skin and body protection : Protective suit

Hygiene measures : General industrial hygiene practice.

9. PHYSICAL AND CHEMICAL PROPERTIES

Appearance : pellets

Odour : slight

Odour Threshold : No data available

pH : substance/mixture is non-soluble (in water)

Melting point/ range	:	For further information, refer to the product technical data sheet.
Boiling point/boiling range	:	Not applicable
Flash point	:	Not applicable
Evaporation rate	:	Not applicable
Flammability (solid, gas)	:	May form combustible dust concentrations in air during processing, handling or other means.
Upper explosion limit / Upper flammability limit	:	Not applicable
Lower explosion limit / Lower flammability limit	:	Not applicable
Vapour pressure	:	Not applicable
Relative vapour density	:	Not applicable
Density	:	For further information, refer to the product technical data sheet.
Solubility(ies)		
Water solubility	:	insoluble
Partition coefficient: n-octanol/water	:	No data available
Auto-ignition temperature	:	For further information, refer to the product technical data sheet.
Decomposition temperature	:	No data available
Viscosity		
Viscosity, dynamic	:	Not applicable
Viscosity, kinematic	:	Not applicable

10. STABILITY AND REACTIVITY

Reactivity	:	No decomposition if stored and applied as directed.
Chemical stability	:	No decomposition if stored and applied as directed.
Possibility of hazardous reactions	:	Stable under recommended storage conditions. Dust can form an explosive mixture in air.
Conditions to avoid	:	No data available

Incompatible materials	:	Not applicable
Hazardous decomposition products	:	Carbon monoxide

11. TOXICOLOGICAL INFORMATION

Acute toxicity

Not classified due to lack of data.

Skin corrosion/irritation

Not classified due to lack of data.

Components:

Glass, oxide, chemicals:

Species	:	Rabbit
Assessment	:	No skin irritation
Method	:	OECD Test Guideline 404
Result	:	Slight or no skin irritation
Remarks	:	Minimal effects that do not meet the threshold for classification.

Serious eye damage/eye irritation

Not classified due to lack of data.

Components:

Glass, oxide, chemicals:

Species	:	Not tested on animals
Result	:	Slight or no eye irritation
Assessment	:	No eye irritation
Remarks	:	Minimal effects that do not meet the threshold for classification.

Respiratory or skin sensitisation

Skin sensitisation

Not classified due to lack of data.

Respiratory sensitisation

Not classified due to lack of data.

Components:

Glass, oxide, chemicals:

Species	:	Not tested on animals
Assessment	:	Does not cause skin sensitisation.
Result	:	Does not cause skin sensitisation.

Germ cell mutagenicity

Not classified due to lack of data.

Components:

Glass, oxide, chemicals:

Germ cell mutagenicity - Assessment	:	Weight of evidence does not support classification as a germ cell mutagen., Overall weight of evidence indicates that the substance is not mutagenic.

Carcinogenicity

Not classified due to lack of data.

Components:

Glass, oxide, chemicals:

Carcinogenicity - Assessment	:	Carcinogenicity classification not possible from current data.

Reproductive toxicity

Not classified due to lack of data.

STOT - single exposure

Not classified due to lack of data.

STOT - repeated exposure

Not classified due to lack of data.

Components:

Glass, oxide, chemicals:

Assessment	:	The substance or mixture is not classified as specific target organ toxicant, repeated exposure.

Repeated dose toxicity

Components:

Glass, oxide, chemicals:

Species	:	Rat
Application Route	:	Inhalation
Exposure time	:	3 Months
Remarks	:	No toxicological effects warranting significant target organ toxicity classification were seen below the recommended guidance values for classification.

Aspiration toxicity

Not classified due to lack of data.

Components:

Glass, oxide, chemicals:

No aspiration toxicity classification

Further information

Product:

Remarks : No data available

12. ECOLOGICAL INFORMATION

Ecotoxicity

Components:

Glass, oxide, chemicals:

Toxicity to fish	:	LC50 (Danio rerio (zebra fish)): > 1,000 mg/l Exposure time: 96 h Method: OECD Test Guideline 203
Toxicity to daphnia and other aquatic invertebrates	:	EC50 (Daphnia magna (Water flea)): > 1,000 mg/l Exposure time: 48 h Method: OECD Test Guideline 202
Toxicity to algae/aquatic plants	:	EC50 (Pseudokirchneriella subcapitata (green algae)): > 1,000 mg/l Exposure time: 72 h Method: OECD Test Guideline 201

Ecotoxicology Assessment

Acute aquatic toxicity : This product has no known ecotoxicological effects.

Chronic aquatic toxicity : This product has no known ecotoxicological effects.

Persistence and degradability

Components:

Glass, oxide, chemicals:

Biodegradability : Result: Not biodegradable
Remarks: Not applicable

Bioaccumulative potential

No data available

Mobility in soil

No data available

Other adverse effects

Product:

Additional ecological information : No data available

13. DISPOSAL CONSIDERATIONS

Disposal methods

Waste from residues	:	Where possible recycling is preferred to disposal or incineration. Dispose of in accordance with local regulations.
Contaminated packaging	:	Empty containers should be taken to an approved waste handling site for recycling or disposal.

14. TRANSPORT INFORMATION

International Regulations

UNRTDG

UN number	:	Not applicable
Proper shipping name	:	Not applicable
Class	:	Not applicable
Subsidiary risk	:	Not applicable
Packing group	:	Not applicable
Labels	:	Not applicable
Environmentally hazardous	:	no

IATA-DGR

UN/ID No.	:	Not applicable
Proper shipping name	:	Not applicable
Class	:	Not applicable
Subsidiary risk	:	Not applicable
Packing group	:	Not applicable
Labels	:	Not applicable
Packing instruction (cargo aircraft)	:	Not applicable
Packing instruction (passenger aircraft)	:	Not applicable

IMDG-Code

UN number	:	Not applicable
Proper shipping name	:	Not applicable
Class	:	Not applicable
Subsidiary risk	:	Not applicable
Packing group	:	Not applicable
Labels	:	Not applicable
EmS Code	:	Not applicable
Marine pollutant	:	no

Transport in bulk according to Annex II of MARPOL 73/78 and the IBC Code

Not applicable for product as supplied.

National Regulations

GB 6944/12268

UN number	:	Not applicable
Proper shipping name	:	Not applicable
Class	:	Not applicable

Subsidiary risk	:	Not applicable
Packing group	:	Not applicable
Labels	:	Not applicable
Marine pollutant	:	no

JT/T 617

UN number	:	Not applicable
Proper shipping name	:	Not applicable
Class	:	Not applicable
Subsidiary risk	:	Not applicable
Packing group	:	Not applicable
Labels	:	Not applicable
Environmentally hazardous		no

Special precautions for user

Not applicable

15. REGULATORY INFORMATION

National regulatory information

Law on the Prevention and Control of Occupational Diseases

Regulations on Safety Management of Hazardous Chemicals

Catalogue of Hazardous Chemicals	:	This product is not listed in the catalogue of hazardous chemicals and it does not meet the definition of hazardous chemicals and its principles of determination.
Identification of Major Hazard Installations for Hazardous Chemicals (GB 18218)	:	Not listed
Hazardous Chemicals for Priority Management under SAWS	:	Not listed
Catalogue of Specially Controlled Hazardous Chemicals	:	Not listed
List of Explosive Precursors	:	Not listed

Regulations on Labour Protection in Workplaces where Toxic Substances are Used

Catalogue of Highly Toxic Chemicals	:	Not listed

Regulation of Environmental Management on the First Import of Chemicals and the Import and Export of Toxic Chemicals

China Severely Restricted Toxic Chemicals for Import and Export	:	Not listed

Regulation on the Administration of Precursor Chemicals

Catalogue and Classification of Precursor Chemicals	:	Not listed

Regulations on the Administration of Controlled Chemicals

List of Controlled Chemicals : Not listed

Regulations of Ozone Depleting Substances Management

List of Controlled Ozone Depleting Substances : Not listed

List of Controlled Ozone Depleting Substances Import and Export : Not listed

Environmental Protection Law

List of Priority Controlled Chemicals : Not listed

List of Key Controlled New Pollutants : Not listed

16. OTHER INFORMATION

Revision Date : 2025/07/25

Date format : yyyy/mm/dd

Full text of other abbreviations

ACGIH : USA. ACGIH Threshold Limit Values (TLV)
CN OEL : Occupational exposure limits for hazardous agents in the workplace - Chemical hazardous agents.

ACGIH / TWA : 8-hour, time-weighted average
CN OEL / PC-TWA : Permissible concentration - time weighted average

AIIC - Australian Inventory of Industrial Chemicals; ANTT - National Agency for Transport by Land of Brazil; ASTM - American Society for the Testing of Materials; bw - Body weight; CMR - Carcinogen, Mutagen or Reproductive Toxicant; DIN - Standard of the German Institute for Standardisation; DSL - Domestic Substances List (Canada); ECx - Concentration associated with x% response; ELx - Loading rate associated with x% response; EmS - Emergency Schedule; ENCS - Existing and New Chemical Substances (Japan); ErCx - Concentration associated with x% growth rate response; ERG - Emergency Response Guide; GHS - Globally Harmonized System; GLP - Good Laboratory Practice; IARC - International Agency for Research on Cancer; IATA - International Air Transport Association; IBC - International Code for the Construction and Equipment of Ships carrying Dangerous Chemicals in Bulk; IC50 - Half maximal inhibitory concentration; ICAO - International Civil Aviation Organization; IECSC - Inventory of Existing Chemical Substances in China; IMDG - International Maritime Dangerous Goods; IMO - International Maritime Organization; ISHL - Industrial Safety and Health Law (Japan); ISO - International Organisation for Standardization; KECI - Korea Existing Chemicals Inventory; LC50 - Lethal Concentration to 50 % of a test population; LD50 - Lethal Dose to 50% of a test population (Median Lethal Dose); MARPOL - International Convention for the Prevention of Pollution from Ships; n.o.s. - Not Otherwise Specified; Nch - Chilean Norm; NO(A)EC - No Observed (Adverse) Effect Concentration; NO(A)EL - No Observed (Adverse) Effect Level; NOELR - No Observable Effect Loading Rate; NOM - Official Mexican Norm; NTP - National Toxicology Program; NZIoC - New Zealand Inventory of Chemicals; OECD - Organization for Economic Co-operation and Development; OPPTS - Office of Chemical Safety and Pollution

Prevention; PBT - Persistent, Bioaccumulative and Toxic substance; PICCS - Philippines Inventory of Chemicals and Chemical Substances; (Q)SAR - (Quantitative) Structure Activity Relationship; REACH - Regulation (EC) No 1907/2006 of the European Parliament and of the Council concerning the Registration, Evaluation, Authorisation and Restriction of Chemicals; SADT - Self-Accelerating Decomposition Temperature; SDS - Safety Data Sheet; TCSI - Taiwan Chemical Substance Inventory; TDG - Transportation of Dangerous Goods; TECI - Thailand Existing Chemicals Inventory; TSCA - Toxic Substances Control Act (United States); UN - United Nations; UNRTDG - United Nations Recommendations on the Transport of Dangerous Goods; vPvB - Very Persistent and Very Bioaccumulative; WHMIS - Workplace Hazardous Materials Information System

Disclaimer

The information provided in this Safety Data Sheet is correct to the best of our knowledge, information and belief at the date of its publication. The information given is designed only as a guidance for safe handling, use, processing, storage, transportation, disposal and release and is not to be considered a warranty or quality specification. The information relates only to the specific material designated and may not be valid for such material used in combination with any other materials or in any process, unless specified in the text.

CN / EN

VECTRA® E471I

Liquid Crystal Polymer

35% GF/Min modified/reinforced, low warp Vectra LCP grade with excellent properties
Chemical abbreviation according to ISO 1043-1 : LCP
Inherently flame retardant.
UL-Listing V-0 at all color at 0.15mm thickness per UL 94 flame testing.
Relative-Temperature-Index (RTI) according to UL 746B: electricals 130 °C, mechanicals 130 °C.
UL = Underwriters Laboratories

Product information

Resin Identification	LCP-(GF+MD)36	ISO 1043
Part Marking Code	>LCP-(GF+MD)36<	ISO 11469

Rheological properties

Moulding shrinkage, parallel	0.1	%	ISO 294-4, 2577
Moulding shrinkage, normal	0.5	%	ISO 294-4, 2577

Typical mechanical properties

Tensile modulus	13500	MPa	ISO 527-1/-2
Tensile stress at break, 5mm/min	130	MPa	ISO 527-1/-2
Tensile strain at break, 5mm/min	2.5	%	ISO 527-1/-2
Flexural modulus	13800	MPa	ISO 178
Flexural strength	200	MPa	ISO 178
Flexural strain at failure	2.5	%	ISO 178
Compressive modulus	11000	MPa	ISO 604
Compressive strength	120	MPa	ISO 604
Compressive stress at 1% strain	82	MPa	ISO 604
Charpy impact strength, 23 °C	55	kJ/m²	ISO 179/1eU
Charpy notched impact strength, 23 °C	13	kJ/m²	ISO 179/1eA
Izod notched impact strength, 23 °C	16	kJ/m²	ISO 180/1A
Izod impact strength, 23 °C	60	kJ/m²	ISO 180/1U
Hardness, Rockwell, M-scale	55		ISO 2039-2
Poisson's ratio	0.33[C]		

[C]: Calculated

Thermal properties

Melting temperature, 10 °C/min	335	°C	ISO 11357-1/-3
Temperature of deflection under load, 1.8 MPa	265	°C	ISO 75-1/-2
Temperature of deflection under load, 8 MPa	220	°C	ISO 75-1/-2
Vicat softening temperature, 50 °C/h 50N	200	°C	ISO 306
Ball pressure test	250	°C	IEC 60695-10-2
Coefficient of linear thermal expansion (CLTE), parallel	7[OT, 1]	E-6/K	ISO 11359-1/-2
Coefficient of linear thermal expansion (CLTE), normal	62[OT, 1]	E-6/K	ISO 11359-1/-2

[OT]: One time tested

[1]: Temperature range: 23 °C to 200 °C

VECTRA® E471I

Liquid Crystal Polymer

Flammability

Burning Behav. at thickness h	V-0	class	IEC 60695-11-10
Thickness tested	0.15	mm	IEC 60695-11-10
Glow Wire Flammability Index, 0.4mm	960	°C	IEC 60695-2-12
Glow Wire Flammability Index, 0.75mm	960	°C	IEC 60695-2-12
Glow Wire Flammability Index, 1.0mm	800	°C	IEC 60695-2-12
Glow Wire Ignition Temperature, 0.75mm	875	°C	IEC 60695-2-13
Glow Wire Ignition Temperature, 0.4mm	900	°C	IEC 60695-2-12

Electrical properties

Relative permittivity, 1MHz	3.8		IEC 62631-2-1
Dissipation factor, 1MHz	310	E-4	IEC 62631-2-1
Volume resistivity	1E14	Ohm.m	IEC 62631-3-1
Surface resistivity	>1E15	Ohm	IEC 62631-3-2
Electric strength	53	kV/mm	IEC 60243-1
Comparative tracking index, 100 drops	200		IEC 60112
Relative permittivity, printed circuits and boards, 2.5 GHz	4[OT]		IEC 61189-2-721
Relative permittivity, printed circuits and boards, 10 GHz	4.04[OT]		IEC 61189-2-721
Dissipation factor, printed circuits and boards, 2.5 GHz	49[OT]	E-4	IEC 61189-2-721
Dissipation factor, printed circuits and boards, 10 GHz	45[OT]	E-4	IEC 61189-2-721

[OT]: One time tested

Physical/Other properties

Humidity absorption, 2mm	0.002	%	Sim. to ISO 62
Water absorption, 2mm	0.015	%	Sim. to ISO 62
Density	1670	kg/m³	ISO 1183

Injection

Drying Recommended	yes	
Drying Temperature	150	°C
Drying Time, Dehumidified Dryer	4 - 6	h
Processing Moisture Content	≤0.01	%
Melt Temperature Optimum	355	°C
Min. melt temperature	335	°C
Max. melt temperature	370	°C
Screw tangential speed	0.2	m/s
Mold Temperature Optimum	100	°C
Min. mould temperature	80	°C
Max. mould temperature	120	°C
Back pressure	3	MPa
Ejection temperature	269	°C

VECTRA® E471I

Liquid Crystal Polymer

Characteristics

Processing	Injection Moulding
Special characteristics	Flame retardant, Heat stabilised or stable to heat, High Flow, Low Warpage, Lead-free soldering resistant

Additional information

Injection molding

Preprocessing

Vectra resins are well known for their excellent thermal and hydrolytic stability. In order to ensure these properties are optimum, the resin should be dried correctly prior to processing. Vectra Ei-grades and Vectra V143XL should be dried at 150°C for a minimum of 6 hours or at 170°C for a minimum of 4 hours in a desiccant dryer.

Processing

A three-zone screw evenly divided into feed, compression, and metering zones is preferred. A higher percentage of feed flights may be needed for smaller machines: 1/2 feed, 1/4 compression, 1/4 metering.

Vectra LCPs are shear thinning, their melt viscosity decreases quickly as shear rate increases. For parts that are difficult to fill, the molder can increase the injection velocity to improve melt flow.

Processing Notes

Pre-Drying

VECTRA should in principle be predried. Because of the necessary low maximum residual moisture content the use of dry air dryers is recommended. The dew point should be =< - 40° C. The time between drying and processing should be as short as possible.

Storage

For subsequent storage of the material in the dryer until processed the temperature does not need to be lowered for grades A, B, C, D and V (<= 24 h).

VECTRA® E471I

Liquid Crystal Polymer

Stress-strain

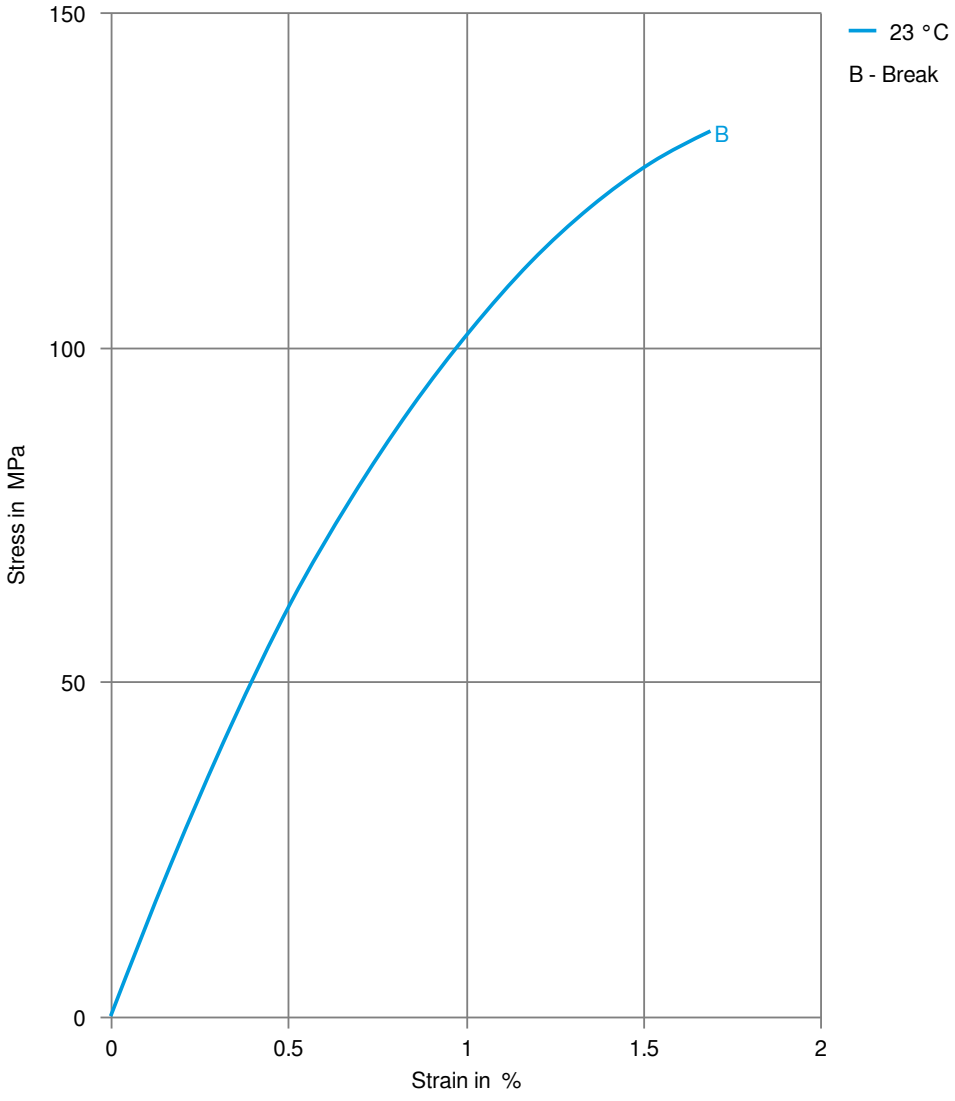

VECTRA® E471I

Liquid Crystal Polymer

Secant modulus-strain

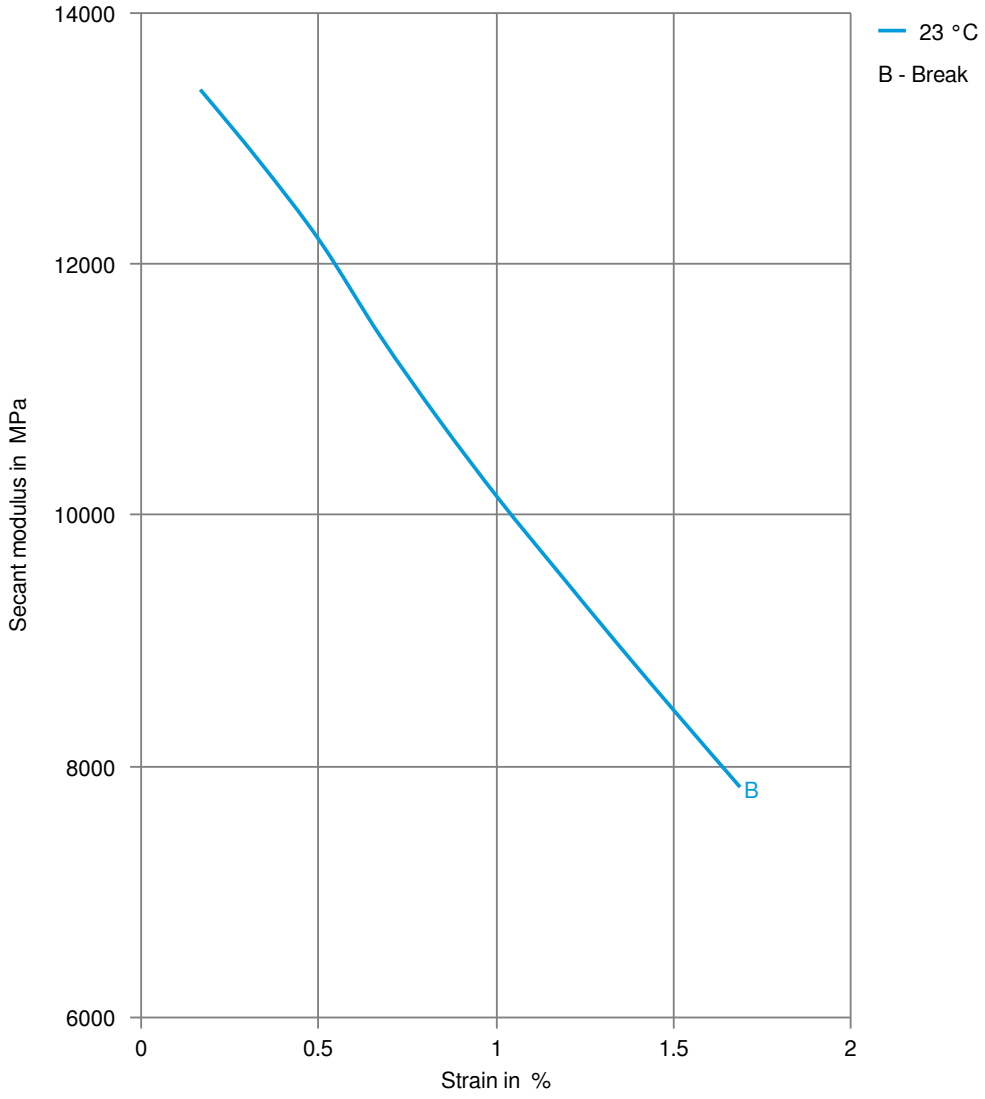

Revised: 2025-06-26 Source: Celanese Materials Database

NOTICE TO USERS: Values shown are based on testing of laboratory test specimens and represent data that fall within the standard range of properties for natural material. These values alone do not represent a sufficient basis for any part design and are not intended for use in establishing maximum, minimum, or ranges of values for specification purposes. Colourants or other additives may cause significant variations in data values. Properties of moulded parts can be influenced by a wide variety of factors including, but not limited to, material selection, additives, part design, processing conditions and environmental exposure. Other than those products expressly identified as medical grade (including by MT® product designation or otherwise), Celanese's products are not intended for use in medical or dental implants. Regardless of any such product designation, any determination of the suitability of a particular material and part design for any use contemplated by the users and the manner of such use is the sole responsibility of the users, who must assure themselves that the material as subsequently processed meets the needs of their particular product or use. To the best of our knowledge, the information contained in this publication is accurate; however, we do not assume any liability whatsoever for the accuracy and completeness of such information. The information contained in this publication should not be construed as a promise or guarantee of specific properties of our products. It is the sole responsibility of the users to investigate whether any existing patents are infringed by the use of the materials mentioned in this publication. Moreover, there is a need to reduce human exposure to many materials to the lowest practical limits in view of possible adverse effects. To the extent that any hazards may have been mentioned in this publication, we neither suggest nor guarantee that such hazards are the only ones that exist. We recommend that persons intending to rely on any recommendation or to use any equipment, processing technique or material mentioned in this publication should satisfy themselves that they can meet all applicable safety and health standards. We strongly recommend that users seek and adhere to the manufacturer's current instructions for handling each material they use, and entrust the handling of such material to adequately trained personnel only. Please call the telephone numbers listed for additional technical information. Call Customer Services for the appropriate Materials Safety Data Sheets (MSDS) before attempting to process our products.
Copyright © 2025 Celanese or its affiliates. All rights reserved.
Celanese®, registered C-ball design and all other trademarks identified herein with ®, TM, SM, unless otherwise noted, are trademarks of Celanese or its affiliates.

2009永基非保税
Kunshan Yongji Precise Electronic Material Co.,Ltd.
江苏省昆山市开发区高科技工业园富士康路1139号
Fushikang Road No.1139 Kunshan City Jiangsu
TEL:0512-57779028　　FAX:0512-57784778

产 品 质 量 证 明 书

编号:IC1001059-2

料号	名称	品名/状态	规格	批号	数量（公斤）
Part No	Product Name	Hardness	Size（mm）	Lot No	Quantity(kg)
	黄铜	C2680H	0.20*13	07-22-201	5

Chemical Composition(%):

分析元素 Chemical Element	Cu	Sn	Zn	Ni	Pb	Sb	Bi	Si	Al	Fe	Co+Ni	Ni+Co+Fe
分析数据 Analysis Data	64.62	-	REM	-	0.002	-	-	-	-	0.005	-	-

分析元素 Chemical Element	C	P	Mn	S	Cr	Mg	In	Cd	Cu+Ag	Be	Cu+Be+Co+Ni+Fe
分析数据 Analysis Data	-	-	-	-	-	-	-	-	-	-	-

物理性能 Physics Properties:

抗拉强度 N/mm2	延伸率（%）	屈服强度 N/mm2	硬度值 HV
Tensile intensity	Elongation(%)	Ericsen Value	Hardness Value
403	19	-	150

尺寸偏差 Size Deviation:

厚度（mm）(+0.05/-0.05)	宽度（mm）(0/-0.10)	侧弯（mm/m）	翘曲(mm/m)
Thickness(mm)	Width(mm)	Bend Test(mm/m)	Warp Test(mm/m)
0.8	16.47	0.7	

品保（章）　　品管：李芳　　日期：2020-7-22　　包装编号：CE001-4812-04

备注： 0.80mm铜片厚度公差范围为（+0.05/-0.05）。其它铜片厚度公差范围为（0/-0.01）mm，宽度公差范围为（0/-0.10）mm