DIVA Labs.

ECR (Engineering Change Request)

Proposed Change：	☐1. Design modification 設計修改 ☐2. Material change 材料變更 ☐3. Manufacturer change 製造商變更 ☐4. Factory change 工廠變更 ☐5. Process sequency change 工序變更 ☐6. Equipment / Tooling change 設備/模具變更 ☐7. Process / Method / Condition change 加工流程/方法/條件變更 ■8.Add second source 新增替代料 ☐9. Others 其他：_____	**Initiator** ：Kevin Tan 0312 1115
Reason for Change：	Due to Nexperial stop shipping 3DBAT54006Y, 3DBAT54008Y issue , add second source.	**EC No**：EC26011101
Model / Part No.：	CDL2013A-1A1, CL-R813BN0EA (EU), CL-R813BN0JA (JP), CL-R813BN0UA (US),	**Issue Date**：2026/1/6 **Requester Dept.**：DV11M016
Implementation Type：	☐1. Immediately Change 立即切換 ■2. Running Change 自然切換 ☐3. Other 其他：_____	**Customer Approval**：(confirmed by PM) ■**Needed** ☐**Not needed**

Material Change Description（Please add pages as needed if the provided space is insufficient.）
物料變更說明（如不敷使用請逕行增頁）

No.	Subassembly		Part No.	Description	Q'ty	Location	Stock	Remark
1	2AAD558R138	B				D203,D204,D207,D301		1st: 3DBAT54006Y 2nd: 3DBAT54009Y
		A	3DBAT54009Y	DIODE (BAT54C,SOT23,SMD,MCC)	7	D309,D311,D501	244	
2	2AAD613054S	B						1st: 3DBAT54006Y 2nd: 3DBAT54009Y
		A	3DBAT54009Y	DIODE (BAT54C,SOT23,SMD,MCC)	1	D401	244	
3	2AAD613054S	B						1st: 3DBAT54008Y 2nd: 3DBAT54019Y
		A	3DBAT54019Y	DIODE (BAT54S,SOT23,SMD,MCC)	1	D109	244	

Comments 會簽意見

R&D		Department 會簽部門								Approval
Initiator	Initiator's Direct Supervisor	DQE	PM	Sales	PE	PMC	SCM	PD	QA	R&D Director
Kevin Tan 0106 1700	Michael 0108 1155 Jaly 0106 0740	[illegible] 0107 1030	Amber 0107 1045	[illegible] 0107 1045	[illegible] 0112 1315 [illegible] 0112 1001	Terry 0116 1200 [illegible] 0126	Min 1/26	[illegible] 0112 1330 Joanne 0112 1830	[illegible] 0127 [illegible] 0127	Michael 0312 0945

ECR (Engineering Change Request)

Engineering Change Assessment Item List 工程變更評估項目清單			
Document	Confirm	Authorized Dept.	Remark
1. Application for Revision of Specification or Drawing(s) for delivery 是否有修改交貨的規格或圖面	☐Yes ■No need	RD	無影響
2. Standards or Regulatories Impact 是否有評估適用之標準或主管機關之相關法規的申請	☐Yes ☑No need	DQE	無影響
3. Change point of PCB mounting PCBA插件位置是否變更	☐Yes ■No need	RD	無影響
4. PCBA Process Changes PCBA製程是否變更	☐Yes (Continue checking below) ☑No	PE	無影響
4-1) Change of Reflow temperature 迴焊溫度是否變更	☐Yes ☐No need		
4-2) Change of bonding temperature 膠合溫度是否變更	☐Yes ☐No need		
4-3) Change of Manual Soldering temperature 人工手焊工具之溫度是否變更	☐Yes ☐No need		
4-4) Change of storage condition after protection humidity package 防潮包裝完成後的儲存條件是否變更	☐Yes ☐No need		
5. Reliability test report (Test result and data) 是否有可靠性測試報告（測試結果及數據）	☐Yes ☑No need	DQE	無影響
6. Process FMEA（Medical only） 是否有進行製程失效模式與效應分析	☐Yes ☑No need	PE	無影響
7. Design FMEA（Medical only） 是否有進行設計失效模式與效應分析	☐Yes ■Noneed	RD	無影響
8. Risk Management（Medical only） 是否有進行風險管理評估	☐Yes ■No need	RD	無影響
9. Change points due to the modification 是否此修改會延伸導致其他變更點	☐Yes ■No need	RD	無影響

ECR (Engineering Change Request)

Engineering Change Assessment Item List 工程變更評估項目清單			
Document	Confirm	Authorized Dept.	Remark
10. Initial Supply Control implements plan or result. 是否有實施供料控制評估	☑Yes ☐No need	PMC	
10-1) Confirm the work order or order number or date for the implementation start of the engineering change. 確認工程變更開始實施之工單或訂單號碼或日期。	☐Yes ☑No need		
10-2) Coordinate the handling methods for related products and materials. 協調相關產品及材料處理方法。	☐Yes ☑No need		
10-3) Arrange the production schedule. 處理生產日程之安排。	☐Yes ☑No need		
10-4) Control the changed materials. 變更材料之管制。	☐Yes ☑No need		
10-5) Establish relevant execution control records for EC materials, register traceability data for each material. 建立有關工程變更物料之相關執行管控記錄、登錄各項物料追溯性資料。	☑Yes ☑No need		
11. Training Requirement 若此一變更影響製程或檢驗，是否需要再做人員訓練	☐Yes ☑No need	PE	無影响
12. Modification contents (For example, the following documents) 是否有評估此變更之各項相關文件（如下） ☐ MDF ☐ DMR ☐ SOP ☐ SIP ☐ QC control plan ☐ Approval Sheet ☐ Engineering Spec ☐ Others	☐Yes ☑No need	QA	SOP無影响

Form-12 Rev.(4.0)
Vendor > JVCKENWOOD Group > Vendor (copy)

JKC company name:

1/30 , 26

Procurement department manager

Issue no.: EC26011101

Vendor name: DIVA

Process / Design Change Notice

Dept.: RD

Via regional proc.

⇩

Regional quality dept.

Please review the following process changes, and consider and instruct whether process investigation or audit is necessary.

Approva	Review	In Charge
Kevin Tan 01/30 14:00	Amber 01/30 15:35	Oli 01/30 15:20

Model/Parts number:	Model / Parts name:	Classification:
1A1C21270100600,1A1A32200100601,1A1A32200100600, 1A1A32200100602	CDL2013A-1A1, CL-R813BN0EA (EU), CL-R813BN0JA (JP), CL-R813BN0UA (US)	☐ C.C ☐ S.C.

Changes

Category	(1) Vendor change. 2. Material mfr. Change. 3. Factory move. 4. Process seq. change 5. Equip. change. 6. Die/tool change. 7. Processing method/condition change 8. Design modification. 9. Others ( )
Reason	Due to Nexperial stop shipping 3DBAT54006Y, 3DBAT54008Y issue , add second source.
Process	1. Assembly 2. Soldering 3. Welding 4. Heating 5. Back processing 6. Plastic molding (7) Others (Add second source)

Previous process	New process	Affected characteristic values, others
3DBAT54006Y,3DBAT54008Y DIODE (BAT54C,SOT23,SMD,NXP) DIODE (BAT54S, SOT23, SMD, NXP)	3DBAT54009Y,3DBAT54019Y DIODE (BAT54C,SOT23,SMD,MCC) DIODE (BAT54S,SOT23,SMD,MCC)	Please reference comparison report. (Attach separate sheets as necessary)

Schedule

Date >>	
1. Prepare documents	
2. Prepare processes	
3. Study process capability	
4. Training	
5. Initial product inspection	
6. Reliability testing	
7. Starting M.P.	
Scheduled delivery of initial products	, Notes

Identification method	Serial number, lot number, others ( ) ( ) / Currently

Rcv. proc. dept.: M. Hasegawa

Answer

Vendor name
To: DIVA LABORATORIES,LTD

2026.3.10

JKC company name: JVCKENWOOD

QA		Engineering		
Approval	In Charge	Approva	Review	In Charge
M.Hashimoto 2026.3.10	S.Takemasa 2026.3.10	S.Ozaki 2026.3.10	M.Hatanaka 2026/3/6	Y.Koaizawa 2026.3.6

Judgment of Change	(1.Accept Change) 2.Disapprove Change 3.Will judge after process investigation 4.Accept under the some condition
Process investigation	1. Will be performed (on / Re-schedule). (2. Won't be performed.)

Initial product submission		
	Product / component	1.Necessar (- Quantity: ; Submit not later than:) (2. Not necessary)
	Material	1. Necessary (- Quantity: ; Submit not later than:) (2. Not necessary) - Mass: kg; Submit days before the initial lot delivery or earlier

Review by proc. dept.: M. Hasegawa 2026.3.10

Other information
(additional documents, Application for Approval of Using Sub Contractor)

Document for Process /Design Change Notice

Document	Reason why no need the document, Supplement
1. Application for Revision of Specification for delivery (Drawings) ☐Yes (:Form-13) ■No need	Please reference comparison report.
2. QA Representative Notification ☐Yes (Form-1) ■No need	Add 2nd source only
3. Application for Approval of Using Sub Contractor ☐Yes(Form-2) ■No need	No change
4. Application of New/Changed Standards ☐Yes (Form-10) ■No need	Use the same incoming inspection standard.
5. Modification contents (i.e. QC control plan) ☐Yes ■No need	No impact to QC control plan.
6. Experienced troubles study and reflect result ☐Yes ■No need	Add 2nd source only
7. Reliability test report (Test result and data) ☐Yes ■No need	Please referance Comparison Report
8. Process capability check result ("C.C"."S.C." items) ☐Yes ■No need	Not SC or CC item
9. Process FMEA ☐Yes ■No need	Add 2nd source only
10. Side-effect verification result ☐Yes ■No need	Add 2nd source only
11. Change points due to the modification ☐Yes ■No need	Please reference Comparison Report.
12. Merits of JVC KENWOOD by the modification. (i.e. Cost, Quality, Delivery) ☐Yes ■No need	Equivalent.
13. Education Plan/Result ■Yes ☐No need	Follow DIVA Internal ECN Documents Process
14. Result of Green Procurement certification guideline ■Yes ☐No need	RoSH
15. Initial Supply Control implements plan or result. ☐Yes ■No need	DIVA part number control.
16. Change of material used ☐Yes(Environmental document) ■None	Add 2nd source only
17. Verification items 1) Change of the parts number (☐Yes ■None) 2)Package specification (☐Yes ■None) 3)Change point of PCB mounting (☐Yes ■None) If the above 1) is [None], fill in the tracing method If the 3) ticks as Yes, please check as below a) Change of Reflow temperature (☐Yes ☐None ☐N/A) b) Change of Reflow temperature (☐Yes ☐None ☐N/A) c) Change of bonding temperature (☐Yes ☐None ☐N/A) d) Change of Manual Soldering temperature(☐Yes ☐None ☐N/A) e)Change of storage condition after protection humidity package (☐Yes ☐None ☐N/A)	Add 2nd source only

DIVA Labs.

Comparison Report

1. Package Dimension

Item	Old 3DBAT54006Y DIODE (BAT54C,SOT23,SMD,NXP)	New 3DBAT54009Y DIODE (BAT54C,SOT23,SMD,MCC)
	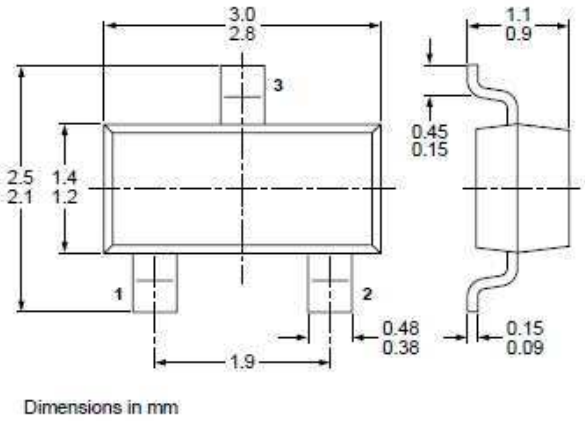 Dimensions in mm	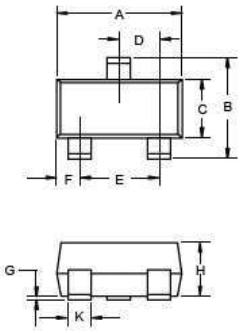 DIMENSIONS DIM / INCHES MIN / INCHES MAX / MM MIN / MM MAX A 0.110 0.120 2.80 3.04 B 0.083 0.104 2.10 2.64 C 0.047 0.055 1.20 1.40 D 0.034 0.041 0.85 1.05 E 0.067 0.083 1.70 2.10 F 0.018 0.024 0.45 0.60 G 0.0004 0.006 0.01 0.15 H 0.035 0.043 0.90 1.10 J 0.003 0.007 0.08 0.18 K 0.012 0.020 0.30 0.51 L 0.007 0.020 0.20 0.50
	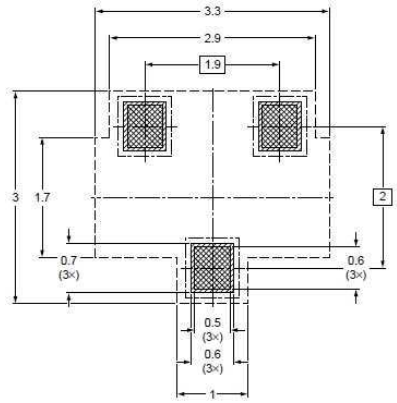 Fig 6. Reflow soldering footprint SOT23 (TO-236AB)	Suggested Solder Pad Layout 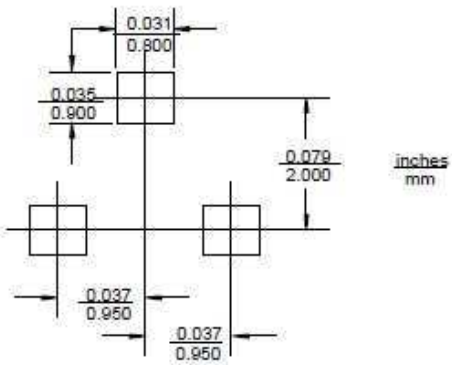

2. Function table

Old 3DBAT54006Y	New 3DBAT54009Y
BAT54C 1 anode (diode 1) 2 anode (diode 2) 3 common cathode 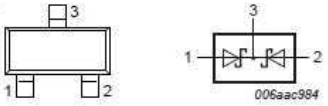	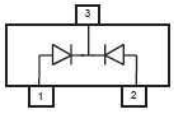 BAT54C

DIVA Labs.

Comparison Report

3. Electrical

ABSOLUTE MAXIMUM RATINGS (T_C = 25°C)

Parameter	Symbol	Limits		Unit
		(Old)	(New)	
Operating temperature range	T_{OP}	-55 to +150	-55 to +125	°C
Storage temperature range	T_{STG}	-65 to +150	-55 to +150	°C

ELECTRICAL CHARACTERISTICS (T_A = 25°C)

Parameter	Symbol	(Old)	(New)	Unit
Reverse Voltage	V_R	30	30	V
Power Dissipation	P_D	250	250	mW
Forward Current	I_F	200	200	mA
Forward Voltage @ I_F 100mA	V_F	800	800	mV
Reverse Current	I_R	2	2	uA
Reverse Recovery Time	t_{rr}	5	5	ns

4. New Sample Testing & Evaluation

Test Model : RUP2433AMI, 2AAD536R038
Test Result : Pass
Test Circuit : D310 , pin3

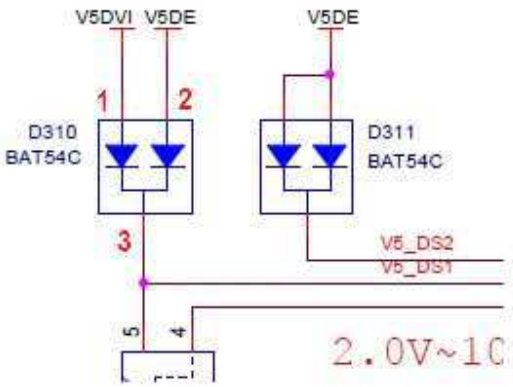

Comparison Report

Item	Old : 3DBAT54006Y	New : 3DBAT54009Y
Pin3	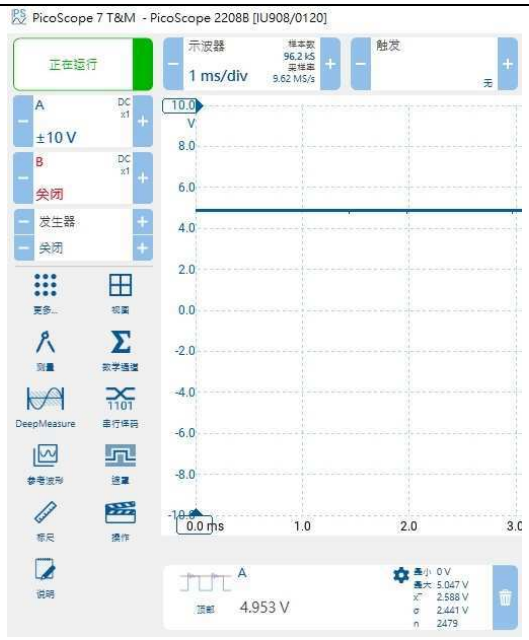	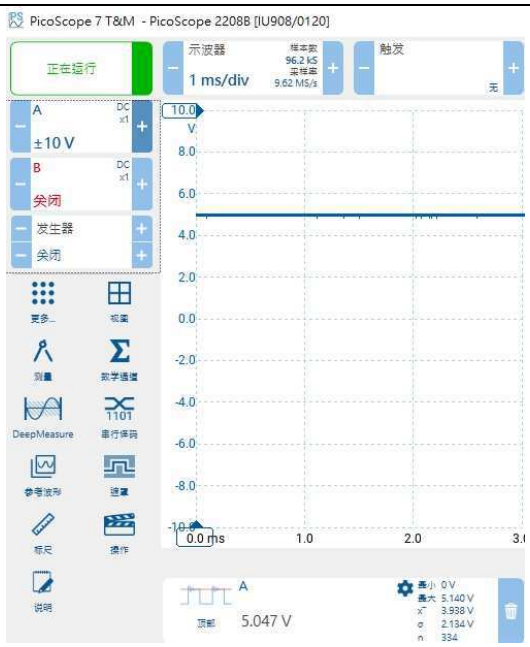

5. Conclusion

This component change has been evaluated by DIVA; the initial successor evaluation showed the new successor is compatible with former model. None of the other components and program will be needed to recalibrate or implement. The ECN will be provided if you approve.

Comparison Report

1. Package Dimension

Item	Old 3DBAT54008Y DIODE (BAT54S, SOT23, SMD, NXP)	New 3DBAT54019Y DIODE (BAT54S,SOT23,SMD,MCC)
	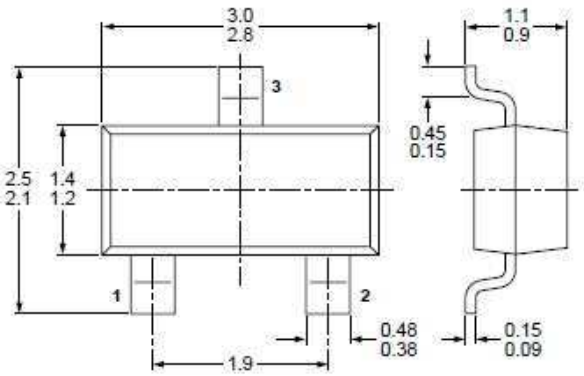 Dimensions in mm	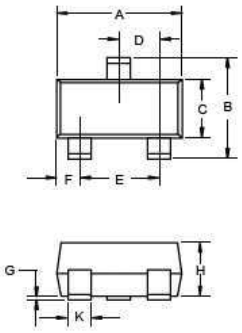 DIMENSIONS DIM / INCHES MIN / INCHES MAX / MM MIN / MM MAX A 0.110 0.120 2.80 3.04 B 0.083 0.104 2.10 2.64 C 0.047 0.055 1.20 1.40 D 0.034 0.041 0.85 1.05 E 0.067 0.083 1.70 2.10 F 0.018 0.024 0.45 0.60 G 0.0004 0.006 0.01 0.15 H 0.035 0.043 0.90 1.10 J 0.003 0.007 0.08 0.18 K 0.012 0.020 0.30 0.51 L 0.007 0.020 0.20 0.50
	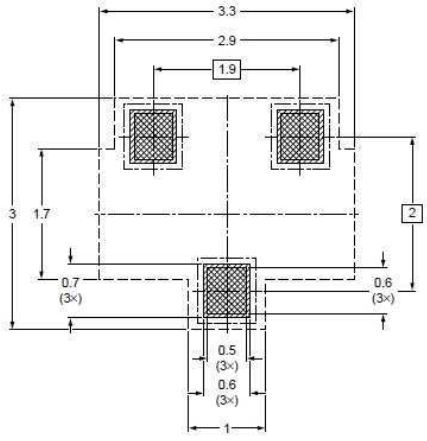 Fig 6. Reflow soldering footprint SOT23 (TO-236AB)	Suggested Solder Pad Layout 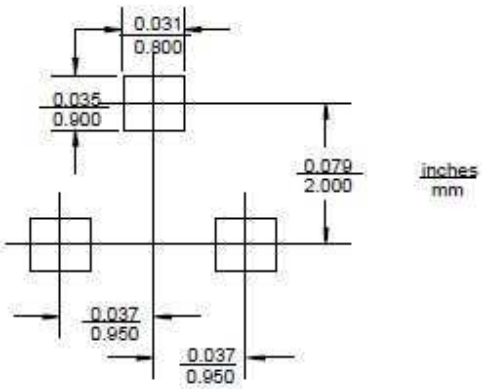

DIVA Labs.

Comparison Report

2. Function table

Old 3DBAT54008Y	New 3DBAT54019Y
BAT54S 1 anode (diode 1) 2 cathode (diode 2) 3 cathode (diode 1), anode (diode 2) 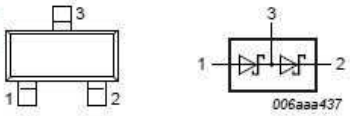	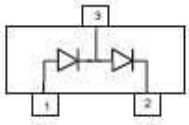 BAT54S

3. Electrical

ABSOLUTE MAXIMUM RATINGS (T_C = 25°C)

Parameter	Symbol	Limits		Unit
		(Old)	(New)	
Operating temperature range	T_{OP}	-55 to +150	-55 to +125	°C
Storage temperature range	T_{STG}	-65 to +150	-55 to +150	°C

ELECTRICAL CHARACTERISTICS (T_A = 25°C)

Parameter	Symbol	(Old)	(New)	Unit
Reverse Voltage	V_R	30	30	V
Power Dissipation	P_D	250	250	mW
Forward Current	I_F	200	200	mA
Forward Voltage @ I_F 100mA	V_F	800	800	mV
Reverse Current	I_R	2	2	uA
Reverse Recovery Time	t_{rr}	5	5	ns

Comparison Report

4. New Sample Testing & Evaluation

Test Model : RUP2433AMI, 2AAD536R038
Test Result : Pass
Test Circuit : D109 , pin1~3

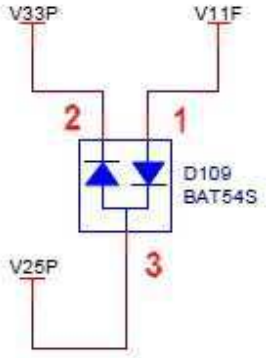

Item	Old : 3DBAT54008Y	New : 3DBAT54019Y
Pin1	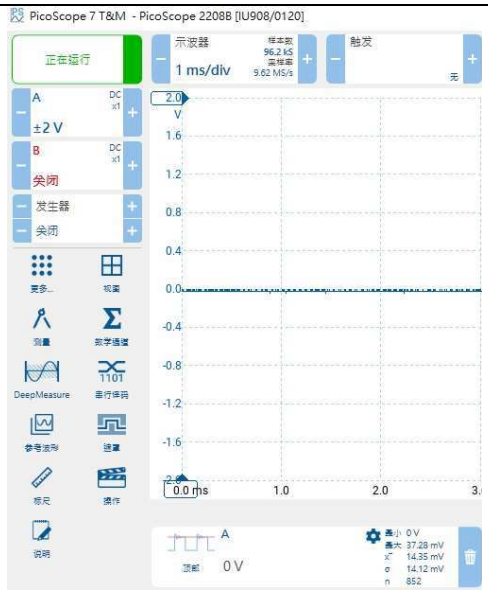	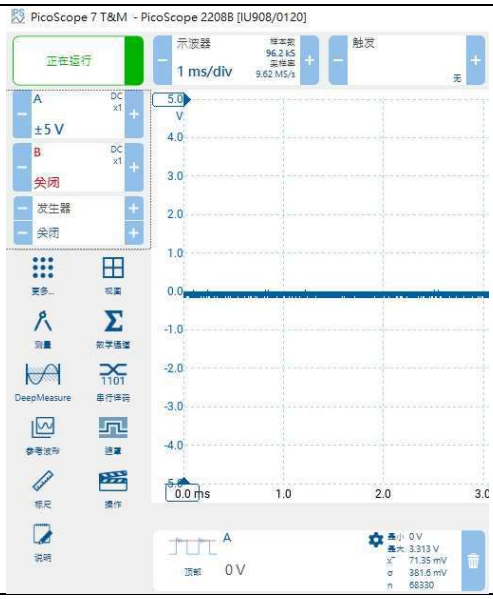

Comparison Report

Pin2	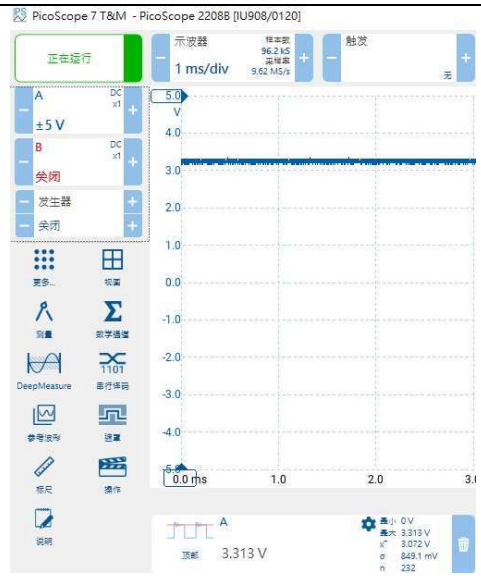	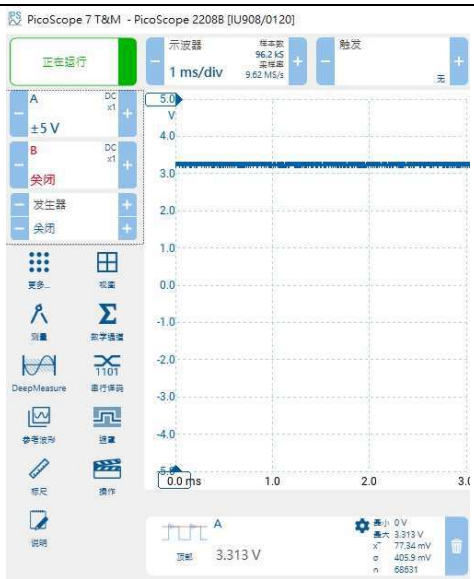
Pin3	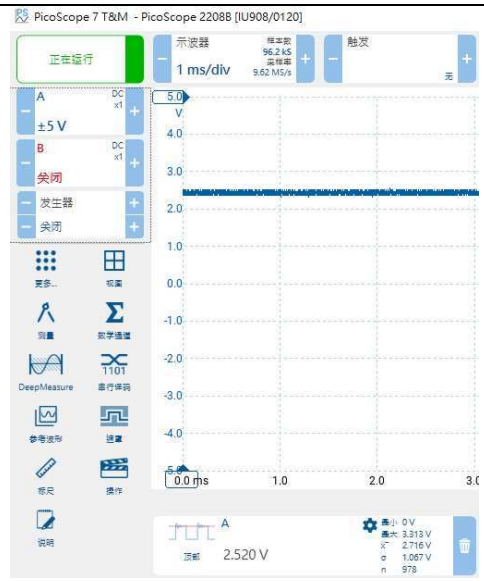	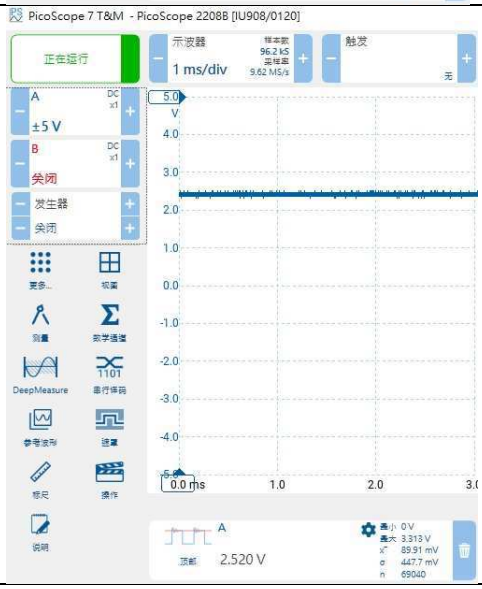

5. Conclusion

This component change has been evaluated by DIVA; the initial successor evaluation showed the new successor is compatible with former model. None of the other components and program will be needed to recalibrate or implement. The ECN will be provided if you approve.

鈺緯科技開發股份有限公司

設計變更審查會議記錄

會議名稱	ECN/ECR	日期	2025/12/22	時間	14:00-14:30	地點	800
會議種類	例會						
主席	Terry	與會人員	Oliver, Dennis, Ryan, Miu, Morris, Eric, Hsuan, Kevin T				
會議記錄	Terry	缺席人員	無				

主席指示事項：

No	工作項目	負責人
1.	因 Nexperia 停止供貨, 進行相關替代料功能,性能及安全性評估	Kevin Tan
2.		

決議事項：

No	工作項目	負責人	狀態
1.	EC 發行新增替代料	Kevin Tan	

追蹤事項：

No	工作項目	負責人	完成日期	狀態	
1.	無				

會議記錄內容：

設計變更原因：因 Nexperia 停止供貨, 增加替代料

設計變更描述: 新增 3BBT390602Y,3BBT390442Y, 3D12VL2BT2Y, 3DSL24PL01Y

3DBAT54009Y, 3DBAT54019Y 替代料

導入時程：Normal

客戶審查：Needed

一. 研發課評估:

單位	審查內容	附加文件
EE :	經測試比對, 功能性及外觀正常	比較表
FW:	經評估該元件與 FW 設計無關,不會造成軟體安全性影響	
ME:	經評估該元件與機構設計無干涉,不會造成安全性影響	
SW:	經評估該元件與軟體設計無關,不會造成軟體安全性影響	
DQE:	經評估該元件不會造成安規安全性影響	

二 結論:

1. 開發單位各部門評估後,此設計變更不會對產品預期用途造成影響,

功能	設計變更內容無關功能影響
性能	設計變更內容,無關產品性能影響
可用性	無影響,沒有使用上的風險
安全性	組裝方式沒有改變, 沒有安全性風險,
法規	經審查,沒有影響法規內容

2. 發行 EC

Kevin_Tan

寄件者: Terry_Huang <terry_huang@diva.com.tw>
寄件日期: 2025年12月23日星期二 上午 11:50
收件者: 'Morris_Pan'; 'Chris_Lu'; 'Judy_lu 盧柏妤'; 'Rongchi_Liao'; 'Tina_Chen 陳美玉'; '王曉雯_Sherry Wang'; 'Una_Tsai 蔡亞純 '; 'Killy_Lee'; 'Mary_Wang 王彥筑'; '黃瓊玉'; 'ericchang'; 'Alina_lee'; 'Sharon_Yeh 葉文琴'; 'Sandra 李慧珊'; 'Estela Hu 胡靜文'; 'Joan_Wang 王尹珏'; 'RD 陳凱翔 Tony Chen '; 'LaslieChen 陳志偉'; 'Lewis_Lee 李慈暉'; 'Kent_Lin林政宏'; 'Nick_Lin 林益銓'; 'MomoHsiao 蕭玉桃'; 'BowenWu 吳汶浦'; 'Shelly_Huang 黃小評'; 'Oliver_Chen 陳冠華'; 'Amber_Tsao 嘉雯'; '李金龍 Kevin_Lee '; '陳泰盛 Tyson_Chen'; 'Ben'; 'RoyHuang 黃玉樹'; '楊建勛 Michael Young'; 'Ryan_Wang 王志維'; 'kevin_Tan 譚德和'; 'RD 陳凱翔 Tony Chen '; 'Ferris_Tsai 蔡豐禧'; 'Miu_Liao'; 'Owen_Chiang'; 'Eric_Chang 張鈞凱'; Joseph_lu@diva.com.tw; danielsue@diva.com.tw; tonychen@diva.com.tw; kent_lin@diva.com.tw; kevin_peng@diva.com.tw
副本: 'Oliver_Chen 陳冠華'; kevin_chen@diva.com.tw; 'Dennis'; 'Hu, Estela (Partner)'; 'Lily_Chiu'
主旨: [1223]ECR會議紀錄

Hi ALL

本週進度

列標籤	計數 - Item
Closed	236
OPEN	49
樣品申請中	5
RD驗證中	1
EC作業中	2
待客戶確認	2
總計	**295**

- Nexperia物料標準品內部EC，三菱，CANVYS，JKC外部EC
- \\192.168.0.14\eol & ec管理空間

Item	ECR P/N	DES	
83	3FF02907510	CONN.F (DVI-I,DVIA-029G1PBB-A,SUPERIOR)	8. 比較表完成，pending，有需求再啟動EC
88	3FM00903410	MINI DB-09 (1210-004-09P-AAE,TEKCON)	7. AD BD 11-2 LTB已下單，扣除工單剩餘20
145	敏美lable	詳#145	5/19 敏美label變更影響安規加報，請Chris
160	3TFTLCD12E0	LCD MODULE (G121EAT02.0,PCAP,AUO 12.1")	12/22 RD發行EC (Daniel)
184	詳#184	EC notice for UV328-free polarizer	12/1 ADP資料已給齊，下週討論通知客人
194	3ZAD24V2511 3ZAD24V2515	ADAPTER (24V2.5A,MDS-060AAS24 BA,UKCA)	9/30 EC25091401 2515 >>> 2740 EMI對策
195	3ZTSPQP0M13	T/P (27,9AQ27009-001,AG,GIS)	8/11 TP餘料40pcs呆料
161	3ZTSPQP0M10	T/P (27,9AQ27005-001,Short FPC,AG,GIS)	12/22 Canvys 5pcs先行退料不組(LCDG27X
208	3N097091B00 3N097091W00	SILICONE GLUE (7091,DOW CORNING,BLACK) SILICONE GULE (7091,DOW CORNING,WHITE)	12/22 驗證3次fail，不進行更換

241	3FF00406910	CONN.F (8370-049-000-800,1.25mm,KYOCERA)	三菱預計下單1k ，不上件(不改BOM) 8/4 AD BD 11-2 1K 2AAD254R038 已下單，
245	上線機種LABEL確認		7/28 已確認EPIQ VM14上線機種敏美轉威嘉
248	3FM00300820	AC SOCKET (R-301SN,RICH BAY)	12/12 承認文件未交付(富灣) 12/22 確認中
249	3KH00077340	AC SOCKET(R-301SN(00))&GND WIRE,YOMIN	12/22 待富灣AC SOCKET提供一併處裡
252	3ABD4746G1Y	IC (BD4746G-TR,SMD,ROHM)	8/11 無需求pending
253	3ABA7657F1Y	IC (BA7657F-E2,SMD,ROHM)	8/11 無需求pending
267	3ZES0005010	ROTARY ENCODER (ED1115S(F))	12/12 業務希望申請專用料, 因政備20K充足 三菱26年需求200台，2AADL21R04X*3398 12/17 Daniel 發EC導入三菱專用客戶碼 12/22 Daniel 發行三階專用客戶碼
268	3AAPW71371Y	IC (APW7137,SOT23-5,ANPEC)	11/3 EETI 3188 優先決議如何處理， <已加測81H84, Eric驗證EMI> 12/12 替代料MT5080已驗證, 現已和
275	2AAD137IC01	**EETI IC ASSY (3188+5440)**	12/22 已被料1k FOR 18.5需求，PO41000
276	3AG671L001Y	**IC (G671L263T93U,SOT323,GMT)**	10/20 下政備同3188 6K訂單 11/3 同3188訂單，後續轉81H84 12/1 多下3000pcs 政備 配套3188+5440 T 12/22 無需下單
278	2AAD095R03E	DC 24/12 BD ASSY (LCRA21EAGBCXBIU)	11/24 去Canvys確認中，寄給客人2台 有 1台 12/1 整機寄回DIVA RD分析 12/22 Fail，複製還原現況找原因
279	**3BBT390601Y**	TR (PMBT3906,SOT-23,SMD,NXP)	12/17 Q2有望解禁，會有新的牌子產出，先 12/22 標準品內部EC，三菱，canvys，JKC
280	**3BBT390420Y**	TR (PMBT3904,SOT-23,SMD,NEXPERIA)	12/17 舊料穩定供料，EC待發 12/22 標準品內部EC，三菱，canvys，JKC
281	**3D12VL2BT1Y**	ESD (PESD12VL2BT_SOT-23,NXP)	12/17 Q2有望解禁，會有新的牌子產出，先 12/22 標準品內部EC，三菱，canvys，JKC
282	**3D2020EH01Y**	DIODE (PMEG2020EH,SOD123F,SMD,NXP)	12/17 Q2有望解禁，會有新的牌子產出，先 12/22 標準品內部EC，三菱，canvys，JKC
283	**3DBAT54004Y**	DIODE (BAT54C,SMD,NXP)	12/17 Q2有望解禁，會有新的牌子產出，先 12/22 標準品內部EC，三菱，canvys，JKC
284	**3DBAT54005Y**	DIODE (BAT54A,SOT23,SMD,NXP)	12/17 Q2有望解禁，會有新的牌子產出，先 12/22 標準品內部EC，三菱，canvys，JKC
285	**3DBAT54006Y**	DIODE (BAT54C,SOT23,SMD,NXP)	12/17 Q2有望解禁，會有新的牌子產出，先
286	**3DBAT54007Y**	DIODE (BAT54,SOT23,SMD,NXP)	12/17 Q2有望解禁，會有新的牌子產出，先
287	**3DBAT54008Y**	DIODE (BAT54S, SOT23, SMD, NXP)	12/17 Q2有望解禁，會有新的牌子產出，先
288	3TFTLCD21Z0	LCD MODULE (G215HAN01.2,AUO 21.5")	11/3 待廠商提供樣品，TBD，是否於請產線