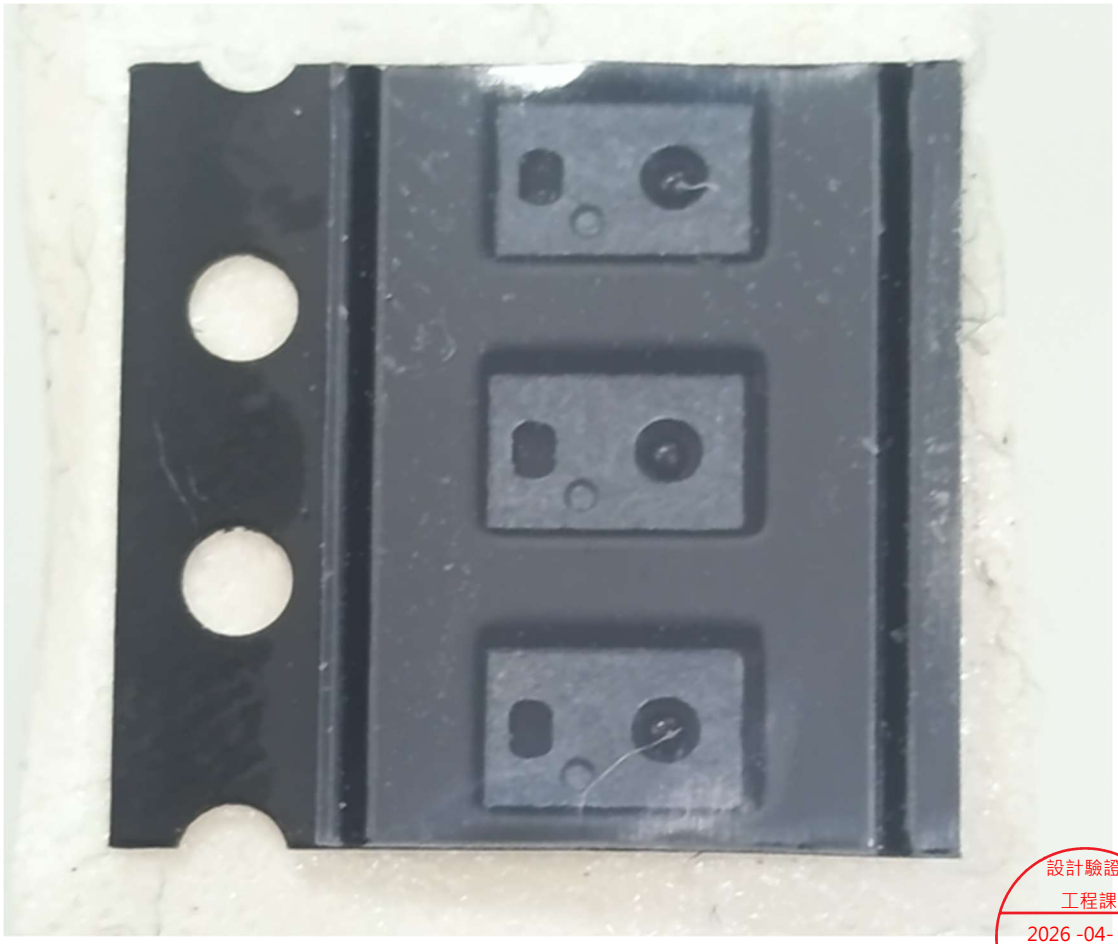

設計驗證
工程課
2026 -04- 02
發行

承　認　書

(Approval Sheet)

客戶名稱: 鈺緯科技開發股份有限公司　DIVA Laboratories. Ltd.

客戶料號: 3ATMF88061Y (A0576)

品名: IC (TMF8806,OLGA,AMS)

設計驗證
工程課
2026 -04- 02
發行
鈺緯科技開發股份有限公司

廠商名稱: 世平興業股份有限公司

產品型號: ams TMF8806

台北市南港區經貿二路189號8樓
世平興業股份有限公司
TEL:(02)2191-0168

TMF8806

Datasheet

Published by ams-OSRAM AG
Tobelbader Strasse 30, 8141 Premstaetten, Austria
Phone +43 3136 500-0
ams-osram.com
© All rights reserved

Table of contents

1 General description 4
1.1 Key specifications & features 4
1.2 Applications 5
1.3 Block diagram 5
1.4 Pin assignment 6

2 Ordering information 7

3 Absolute maximum ratings 8

4 Electrical characteristics 9
4.1 Algorithm performance parameters 12

5 Typical operating characteristics 14

6 Functional description 17
6.1 Functional working principle 17
6.2 Startup of TMF8806 19
6.3 Power modes 21
6.4 Distance modes 22
6.5 Optical stack configurations 24
6.6 EMC performance enhancements 25
6.7 I/O voltage selection 26
6.8 Ranging acquisition timing 27
6.9 Algorithm performance 28
6.10 VCSEL 29
6.11 Typical optical characteristics 29
6.12 I²C protocol 31

7 Register description 34
7.2 App0 registers 37
7.3 Object detection results 47
7.4 Calibration and algorithm state data exchange 55
7.5 Raw histogram output 56
7.6 Serial number readout 57

7.7 Interrupt suppression registers 59
7.8 Bootloader 61

8 Application information 65
8.1 Schematic 65
8.2 PCB layout 68
8.3 PCB pad layout 69
8.4 Calibration 70
8.5 Software drivers 70

9 Package drawings & markings 71

10 Tape & reel information 72

11 Soldering & storage information 73
11.1 Soldering information 73
11.2 Storage information 74

12 Laser eye safety 76

13 Revision information 77

14 Legal information 78

TMF8806 Time-of-flight sensor

1 General description

The TMF8806 is a dToF (direct Time of Flight) optical distance sensor module achieving up to 10000 mm target detection distance. The TMF8806 can operate at ultra low power consumption using a new ultra low power mode. It allows operation with I²C hosts with a very wide voltage range: 1.2 V and 1.8 V to 3.3 V.

The TMF8806 is a single modular package with integrated VCSEL. The TMF8806 device is based on SPAD, TDC and histogram technology. The device achieves 10000 mm detection range.

1.1 Key specifications & features

The benefits and features of TMF8806, Time-of-flight sensor are listed below:

Table 1: Key benefits & features

Benefits	Features
Small footprint fits in the mobile phone bezel	Modular package - 2.2 mm x 3.6 mm x 1.0 mm
Detecting central closest objects	No influence on multi object reflections
Wide range of host devices	I/O supply from 1.2V, 1.8V to 3.3V
Within 3 % of measurement (accuracy); no multipath and no multiple object problems as for iToF	Time-to-Digital Converter (TDC) Direct Time-of-Flight Measurement
Better accuracy detects reliably closest object Minimum distance 10 mm, maximum 5000 mm	Single Photon Avalanche Photodiode (SPAD) Histogram based architecture
No complex calibration	Dynamic cover glass calibration
Compensates for dirt on glass	Reliable operation under demanding use cases
Improved accuracy over temperature and life	Reference SPAD and sopisticated on-chip algorithm
Class 1 eye safe	Fast VCSEL driver with protection
Longer battery life	27 mA power consumption at 30 Hz operation. 14 µA power consumption at 0.5 Hz operation and ultra low power mode 0.26 µA power-down current consumption (EN=0)
No additional expensive EMC parts	EMC improvements

1.2 Applications

The device is ideal for use in the mobile phone market with applications including:

- Distance measurement for camera autofocus (Laser Detect Autofocus - LDAF)
- Battery operated systems with long runtime
- Presence detection - Object detection
- Collision avoidance

1.3 Block diagram

The functional blocks of this device are shown below:

Figure 1: Functional blocks of TMF8806

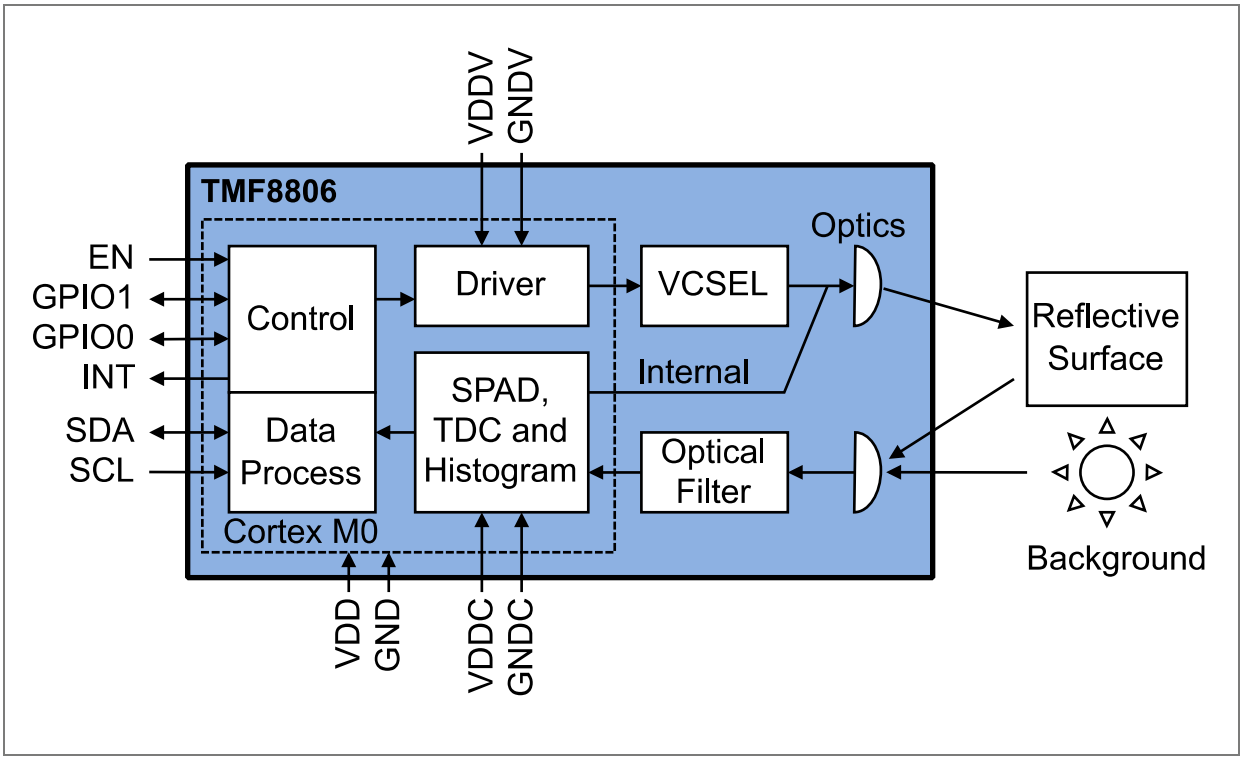

1.4 Pin assignment

1.4.1 Pin diagram

Figure 2: Pin locations top through view (not to scale)

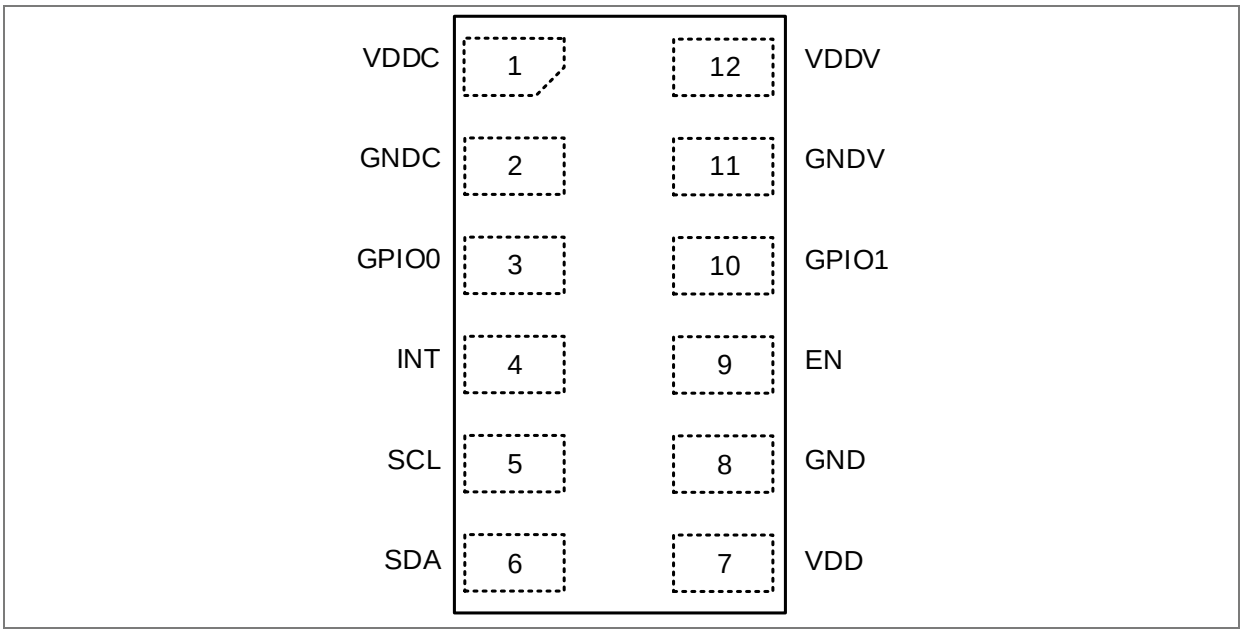

Table 2: Pin description of TMF8806

Pin number	Pin name	Signal type	Description
1	VDDC	Supply	Charge pump supply voltage (3 V); add a capacitor GRM155R70J104KA01 (0402 X7R 0.1 µF 6.3 V) to GND
2	GNDC	Ground	Charge pump ground; connect all ground pins together
3	GPIO0	I/O	General purpose input/output; default Hi-Z; if not used, connect to VDD for 1.8 V to 3.3 V I/O supply or GND for 1.2V I/O supply. During startup after the rising edge of EN, or rising edge of VDD if EN = VDD, this pin is monitored and used to switch between 1.2 V I/O supply and 1.8 V to 3.3 V I/O supply.
4	INT	Output	Interrupt. Open-drain output; default Hi-Z; connect to GND if not used, do not leave floating.
5	SCL	Input	I²C serial clock
6	SDA	I/O	I²C serial data
7	VDD	Supply	Chip supply voltage (3 V); add a capacitor GRM155R70J104KA01 (0402 X7R 0.1 µF 6.3 V) to GND

Pin number	Pin name	Signal type	Description
8	GND	Ground	Chip ground; connect all ground pins together
9	EN	Input	Enable input active high; setting to low forces the device into shutdown and all memory content is lost; connect the EN pin to a host GPIO to control the hardware reset function of TMF8806. If this functionality is not needed, connect to VDD.
10	GPIO1	I/O	General purpose input/output; default Hi-Z; connect to GND if not used
11	GNDV	Ground	VCSEL ground; connect all ground pins together
12	VDDV	Supply	VCSEL supply voltage (3 V); add a capacitor GRM155R70J104KA01 (0402 X7R 0.1 µF 6.3 V) to GND

(1) SDA, SCL, INT and EN have no diode to any VDD supply. Therefore, even with VDD = 0 V, they do not block the interrupt line or I²C bus.
(2) GPIO0 and GPIO1 are push/pull output and have a diode to VDD; therefore, if VDD is not powered, GPIO0 and GPIO1 should not be driven from outside.

2 Ordering information

Product type	Ordering code (Q-number)	Package	Marking	Delivery form	Delivery quantity
TMF8806-1AM	Q65113A9062	Optical module	5-digit tracecode (coded)	Tape & reel (7″ reels)	500 pcs/reel
TMF8806-1A	Q65113A8036	Optical module	5-digit tracecode (coded)	Tape & reel (13″ reels)	5000 pcs/reel

3 Absolute maximum ratings

Stresses beyond those listed under “Absolute Maximum Ratings” may cause permanent damage to the device. Functional operation of the device at absolute maximum rating conditions is not implied, nor at any other conditions beyond those indicated under “Operating Conditions”.

Table 3: Absolute maximum ratings of TMF8806

Symbol	Parameter	Min	Max	Unit	Comment
Electrical parameters					
VDDC, VDDV, VDD	3 V supply voltage	-0.3	3.6	V	Connect pins VDDC, VDDV, VDD on PCB with very short connections
GNDV, GNDC, GND	Ground	0.0	0.0	V	Connect all GND pins on PCB with very short connections
GPIO0, GPIO1	Digital I/O terminal voltage	-0.3	VDD + 0.3 V max. 3.6 V	V	Protection diode to VDD
INT, SCL, SDA, EN	Digital I/O terminal voltage	-0.3	3.6	V	No protection diodes to any positive supply only to ground
I_SCR	Latch up immunity		± 100	mA	JEDEC JESD78E
Electrostatic discharge					
ESD_{HBM}	Electrostatic discharge HBM		± 2000	V	JEDEC JS-001-2017
ESD_{CDM}	Electrostatic discharge CDM		± 500	V	JEDEC JS-002-2018
Temperature ranges and storage conditions					
T_{STRG}	Storage temperature range	-40	85	°C	
T_{BODY}	Package body temperature		260	°C	IPC/JEDEC J-STD-020(1)
RH_{NC}	Relative humidity (non-condensing)	5	85	%	
MSL	Moisture sensitivity level		3		Represents a maximum floor life time of 168h with T_{AMB} < 30 °C and < 60% r.h.

(1) The reflow peak soldering temperature (body temperature) is specified according to IPC/JEDEC J-STD-020 “Moisture/Reflow Sensitivity Classification for Nonhermetic Solid State Surface Mount Devices.”

4 Electrical characteristics

All limits are guaranteed. The parameters with Min and Max values are guaranteed with production tests or SQC (Statistical Quality Control) methods.

Device parameters are guaranteed at nominal conditions unless otherwise noted. While the device is operational across the temperature range, functionality will vary with temperature.

Table 4: Electrical characteristics

Symbol	Parameter	Conditions	Min	Typ	Max	Unit	Comment
V_{VDDV}, V_{VDDC}, V_{VDD}	Supply voltage		2.7	3.1	3.5	V	
t_{AMB}	Free-air temperature		-40	25	70	°C	Operational
		VCSEL clk = 18.8MHz *vcselClkDiv2*=1, VDD >= 3.0V			85		
Current consumption[1]							
I_{POWER_DOWN}	I_VDD powerdown	Enable pin low, I²C off		0.04	1	µA	State: Powerdown
$I_{STANDBY}$	I_VDD standby CPU off, RAM on OSC Off, pon = 0; I²C wakeup only			85		µA	State: Standby
I_{WAIT}	I_VDD wait CPU off, RAM on, OSC on 5 MHz I²C on, timer wakeup			140		µA	State: Wait
I_{ACTIVE}	I_VDD ranging processing CPU running at 80 MHz no VCSEL, No TDC			2.3		mA	State: Histogram processing
$I_{ACTIVE_RANGING}$	I_VDD ranging active CPU stopped *vcselClkDiv2*=0 (default), TDCs running			32.5		mA	State: Ranging active
$I_{RANGING_AVG}$	2.5m range, 33ms data rate	900k iterations		25.8		mA	
	5m range, 66ms	900k iterations		22.9		mA	
	5m range, 33ms	450k iterations		20.4		mA	
	10m range	1500k iterations		19.2		mA	
	2.5m mode, 33ms	450k iterations		13.5		mA	
	1s data rate	10k iterations ultra low power mode, default range		46		µA	
	2s data rate	10k iterations ultra low power mode, short range		15		µA	

Symbol	Parameter	Conditions	Min	Typ	Max	Unit	Comment
I_{VCSEL_PEAK}	Peak VCSEL current (only internal)			230		mA	
System parameters							
f_{CPU}	The CPU can operate with the RC oscillator directly or with a 16x PLL; frequency tuning adjusts the default frequency to 4.7 MHz			4.7	75 (= 4.7*16)	MHz	
f_{PLL}	Max PLL frequency			150.4		MHz	
Reset pin and power-up timing							
t_{POR}	Power on (Boot Time, EN to I²C active)			1.6		ms	
t_{EN_MEAS}	Enable high to ready for measurement excluding host time				5	ms	
t_{STBY_ACT}	Standby to active time			<<1		ms	
t_{ACT_STBY}	Active to standby time			<<1		ms	
t_{EN_OFF}	Enable low to power down time			<<1		ms	
Ranging acquisition timing							
$t_{RANGING_INIT}$	Ranging init (including electrical calibration) - only done on first startup and if temperature changed from last calibration			8		ms	
$t_{RANGING_PERIOD}$	*repetitionPeriodMs* = 0xfd			209		ms	
	repetitionPeriodMs = 0xfe / 0xff			1000 / 2000			
Iterations	Allowed iterations range - *kIters*		10k	900k	4000k		
I/O levels							
$V_{1v2_threshold}$	See section 6.7			1.5		V	
V_{IO}	VIO supply	1.2 V operation	1.1	1.2	1.3	V	
		1.8 - 3.3 V operation	1.65	1.8	3.5		
I_{LEAK}	SDA, SCL, GPIO0/1, EN, INT		-5		5	µA	
V_{IL_EN}	Low level input voltage pad EN - suitable for 1.2V and 1.8V to 3.3V operation		0.0		0.32	V	
V_{IH_EN}	High level input voltage pad EN - suitable for 1.2V and 1.8V to 3.3V operation		0.92		3.5	V	
V_{IL_1V2}	Input low level	Pads SCL, SDA, 1.2V I/O supply	0.0		0.38	V	
V_{IH_1V2}	Input high level		0.8		3.5	V	
$V_{IL_1V8_3V3}$	Input low level	Pads SCL, SDA, 1.8-3.3 V I/O supply	0.0		0.57	V	
$V_{IH_1V8_3V3}$	Input high level		1.19		3.5	V	

Symbol	Parameter	Conditions	Min	Typ	Max	Unit	Comment
V_{IL_GPIO}	Low level input voltage pad GPI0/1		0		0.54	V	
V_{IH_GPIO}	High level input voltage pad GPI0/1		1.26			V	
V_{OL}	Output low level SDA, GPIO0/1, INT	2 mA sink	0		0.36	V	
		4 mA sink	0		0.6	V	
I_{DRIVE_H}	GPIO0/1 if pad is pulled to VDD	1 V applied on GPIO	3.6			mA	
I_{DRIVE_L}	GPIO0/1 if pad is pulled to GND	1 V applied on GPIO	3.9			mA	
I²C interface							
f_{SCLK}	SCL clock frequency		0	400	1000	kHz	
t_{BUF}	Bus free time between a STOP and START		0.5			µs	
$t_{HD:STA}$	Hold time (Repeated) start		0.26			µs	
t_{LOW}	LOW period of SCL clock		0.5			µs	
t_{HIGH}	HIGH period of SCL clock		0.26			µs	
$t_{SU:STA}$	Setup time for a repeated START		0.26			µs	
$t_{HD:DAT}$	Data hold time		0			µs	
$t_{SU:DAT}$	Data setup time		50			ns	
t_R	Rise time of both SDA and SCL		20		120	ns	
t_F	Fall time of both SDA and SCL		20		120	ns	
Optical parameters							
FoI/FoV	Field of illumination / Field of view			See section 6.11			

(1) All current consumption values include silicon process variation. Temperature and voltages are at nominal conditions (23 ºC and 2.8 V).

4.1 Algorithm performance parameters

Table 5: Algorithm performance parameters

Parameter	Condition		Min	Nom	Max	Units
Timings						
Default data rate	Default Mode, 2.5 m range *distanceEnabled=1, distanceMode=0* (2.5 m range), *kIters=900* (900 k iterations), *vcselClkDiv2=0* (VCSEL 37.6 MHz)			33		ms
Object detection algorithm parameters						
Reflectivity of object at 940 nm	Perpendicular to TMF8806		18		90	%
White wall, default optical stack	10 m range	350 lux fluorescent light on object, 90% white card, 1500k iterations (150ms)		10000(1)		mm
		350 lux fluorescent light on object, 90% white card, 225k iterations (33ms)		7000		mm
Maximum distance detection, 1.5 m x 1.5 m object, default optical stack	5 m range	350 lux fluorescent light on object, 90% white card, 450k iterations (33ms)		5000(1)		mm
		350 lux fluorescent light on object, 18% grey card, 900k iterations (66ms)		3750		mm
		350 lux fluorescent light on object, 18% grey card, 450k iterations (33ms)		3250		mm
	2.5 m range, 33 ms, 900k iterations	350 lux fluorescent light on object, 18% grey or 90% white card		2500(1)		mm
		170 lux halogen light on object(2), 90% white card		2430(1)		mm
		170 lux halogen light on object(2), 18% grey card,		1840		mm
		170 lux halogen light on object(2), 18% grey card, smudge on glass(3)		1500		mm
		830 lux halogen light on object(4), 90% white card		1850		mm
		830 lux halogen light on object(4), 18% grey card		1170		mm
	Ultra low power operation, 350 lux fluorescent light on object, 10k iterations, 2.5 m range, 18% grey card			665		mm
Minimum distance detection, 18 % grey card, 20 cm x 26 cm	Default optical stack configuration			0(5) (10)		mm
	Large airgap optical stack configuration			20		mm
	Thick cover glass optical stack configuration			40		mm

Parameter	Condition		Min	Nom	Max	Units
Accuracy, default or large airgap optical stack	2.5 m range	Object distance ≥ 200 mm		±3		%
		50 mm ≤ object distance < 200 mm		±6		mm
		Object distance < 50 mm		+5 -15		mm
	5 m range	Object distance ≥ 500 mm		±3		%
		50 mm ≤ object distance < 500 mm		±15		mm
		Object distance < 50 mm		+5 -20		mm
	10 m range	Object distance ≥ 2000 mm		±2		%
Transition short to long distance mode				200		mm

(1) A target reported above 2500 mm respectively 5000 mm or 10000 mm should be considered as no object.
(2) 170 Lux halogen light represents 1k Lux sunlight equivalent: light on object only.
(3) Smudge on glass is defined by one layer of Scotch Magic Tape 810 (very diffuse).
(4) 830 Lux halogen light represents 5 k Lux sunlight equivalent: light on object only.
(5) A white or grey object can be detected at 0mm.

5 Typical operating characteristics

Following operating characteristics are measured with calibrated devices with full optical stack including glass with >90 % transmissivity. The airgap is set to meet the requirements of the optical design guide. The ambient light is measured on the 2 m x 2 m target. A very diffuse scotch magic tape 810 is used for measurement with smudge.

In the measurements halogen light (HAL) is used to emulate sunlight – the lux levels are provided as figure headings, otherwise indoor lighting with 350 lux fluorescent light is used.

Figure 3: 90% white, 450k, 33ms, 5m mode

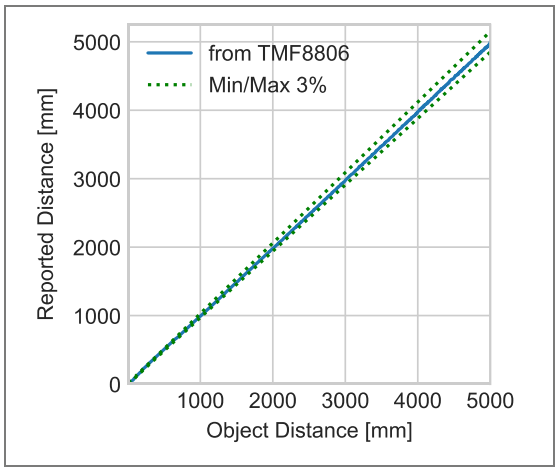

Figure 4: 18% grey, 900k, 66ms, 5m mode

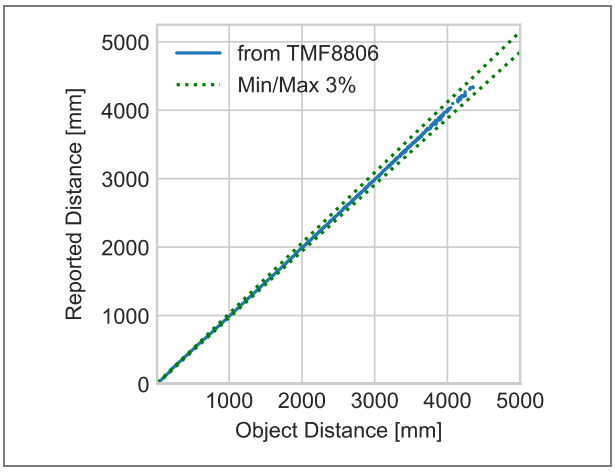

Figure 5: 18% grey, 450k, 33ms, 2.5m mode

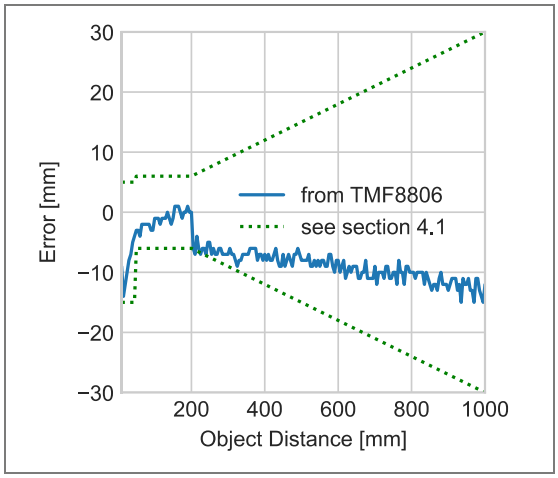

Figure 6: 18% grey, 10k, ultra low power

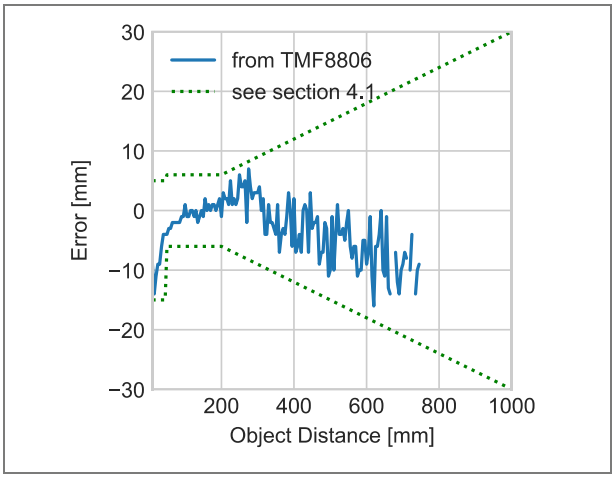

Figure 7: 90%, 900k, 33ms, 170 HAL=1k sun

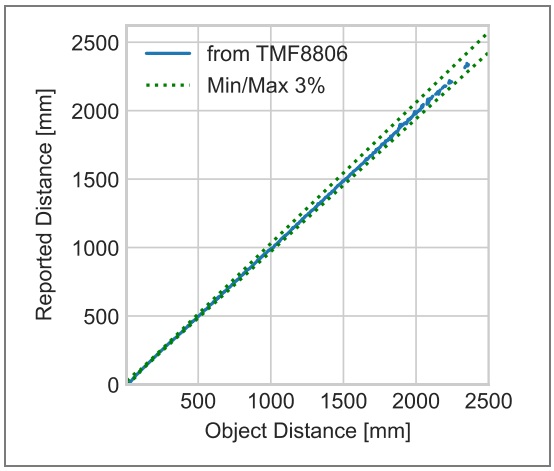

Figure 8: 18%, 900k, 33ms, 170 HAL=1k sun

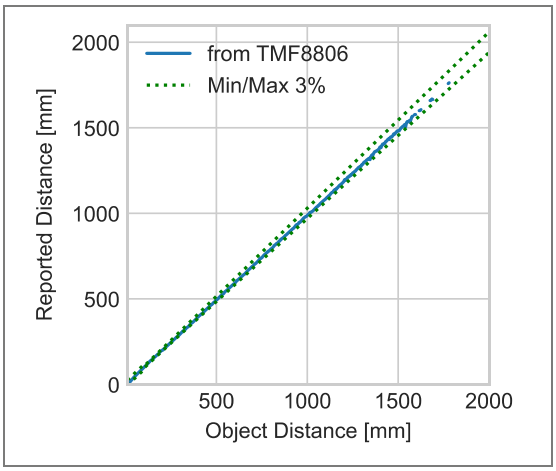

Figure 9: 18%, 900k, 33ms, 1k sun, smudge

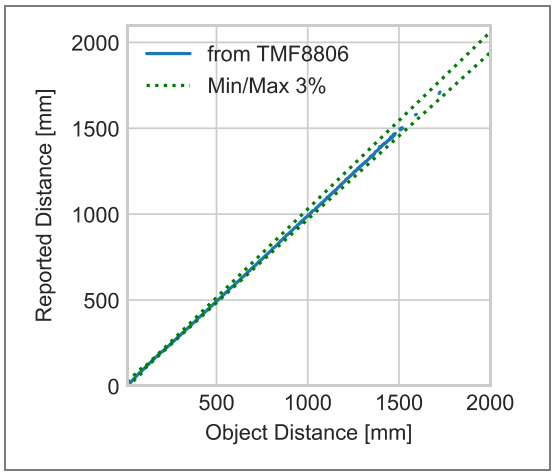

Figure 10: 18%, 900k, optical stack config's

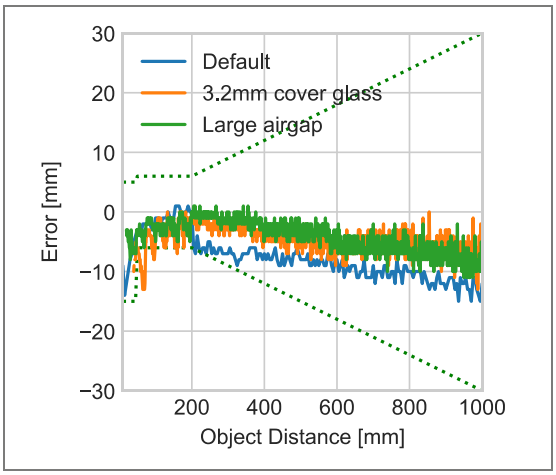

Figure 11: Field of illumination of VCSEL (FOI) x-axis: ±10.4°, y-axis: ±10.31°, 1/e²

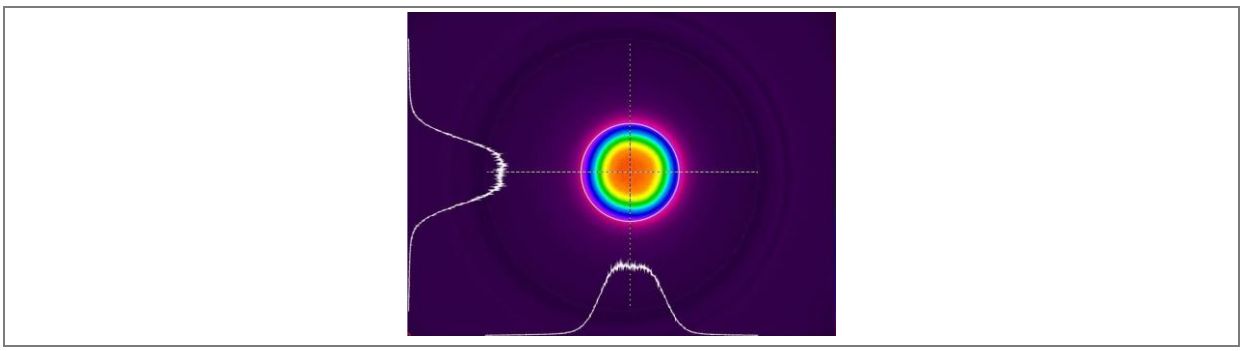

Figure 12: EMC emission spectrum, 2.5 m mode, no EMC enhancements, 4000k iterations

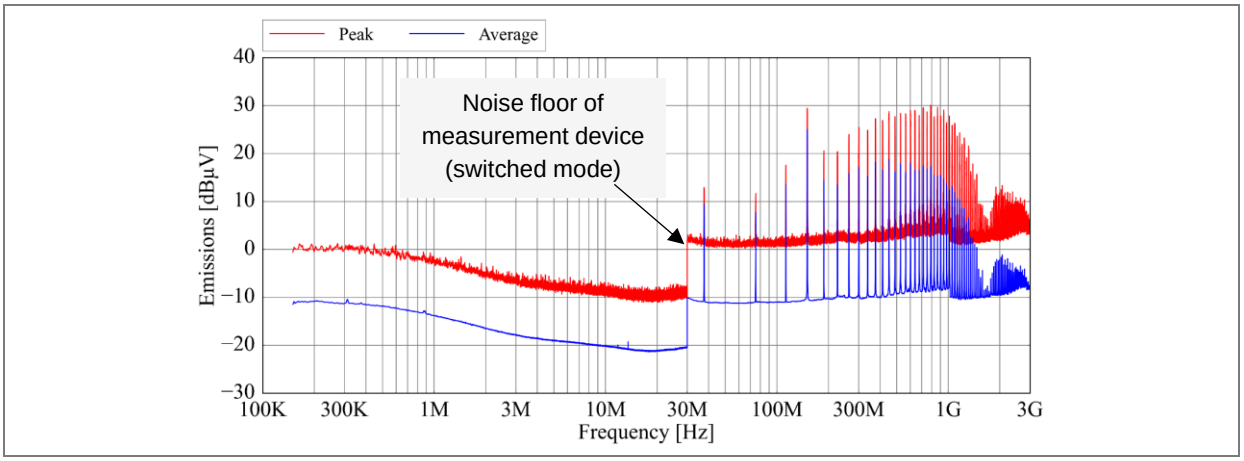

Figure 13: EMC emission, 2.5 m mode, VCSEL driver and both charge pumps using EMC enhancements

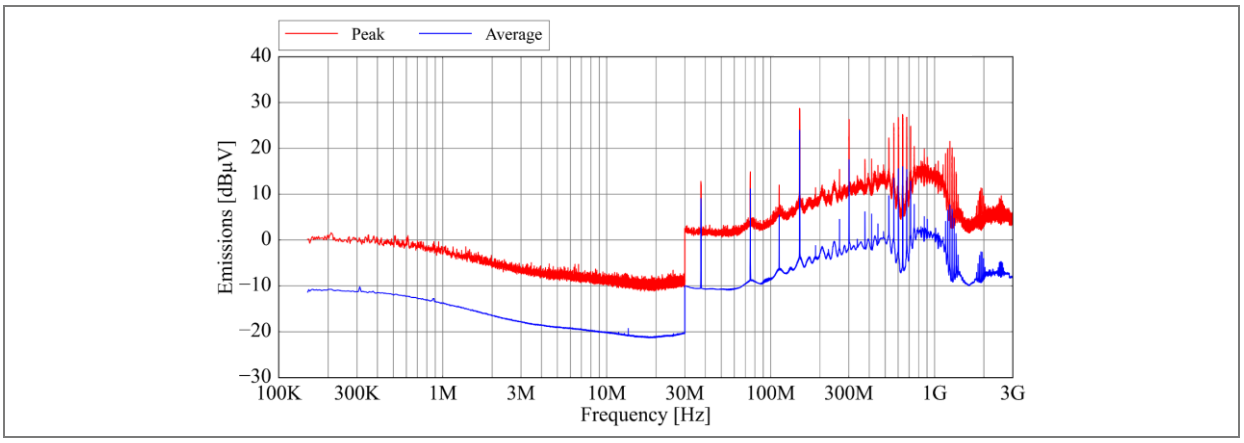

Figure 14: EMC emission, 5 m mode, VCSEL driver and both charge pumps using EMC enhancements

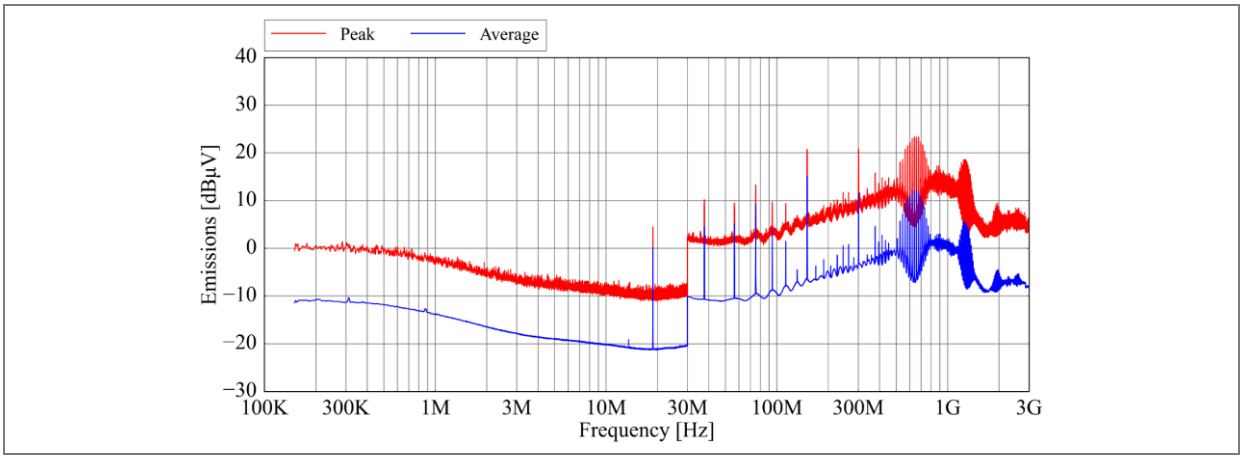

6 Functional description

6.1 Functional working principle

The TMF8806 is a direct time of flight sensor which measures the time between sending a light pulse to the time it is received. The TMF8806 internally generates histograms vs. time for each measurement – this allows the device to measure the ultra-short times needed to get a resolution of 1 mm as 1 mm is only 6.66ps.

There is an internal reference SPAD with associated TDC and histogram. This is used to determine the exact start time of each pulse. The reference SPAD is processed during calibration and in operation of the device. All processing occurs internally inside the device with no user interaction required.

The measurement SPADs are used to capture the measurement histograms; using the different measurement channels, the target distance is calculated, and the best channel is used for the final distance result.

All histograms can be processed inside the TMF8806 and/or readout through the I²C interface. As the readout is constrained by the I²C speed and the I²C bus utilization (TMF8806 can support I²C speed up to 1 MHz), it is recommended to readout the histograms only for debugging purposes.

Figure 15 shows a histogram obtained from TMF8806. The x-axis is scaled in bins, where the nominal bin size is 100 ps per bin and each TDC has 256 bins. The y-axis is scaled in counts represented by 16-bit values. The green line shows the reference histogram from TDC0 and its peak marks the reference or zero distance. The other four lines (blue, cyan, red and violet) are the histograms obtained from TDC1 to TDC4. A target at 20 cm is used to generate the peak around bin 25.

Figure 15: Histogram

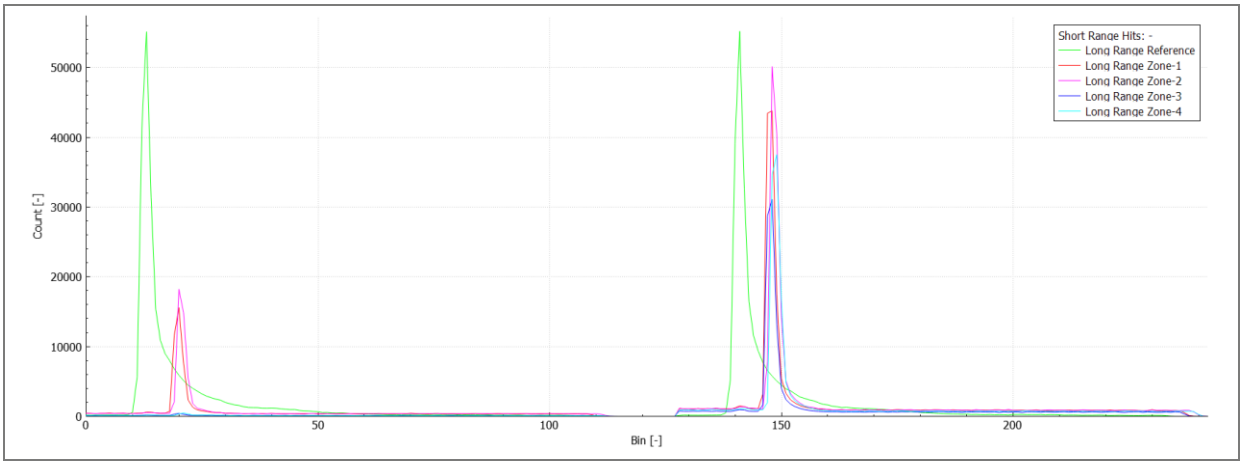

(1) The above histogram is used for general device information only. The actual histogram differs due to the different bin size and modes used.

6.2 Startup of TMF8806

Figure 16: Startup sequence of TMF8806 from power down to application commands accepted

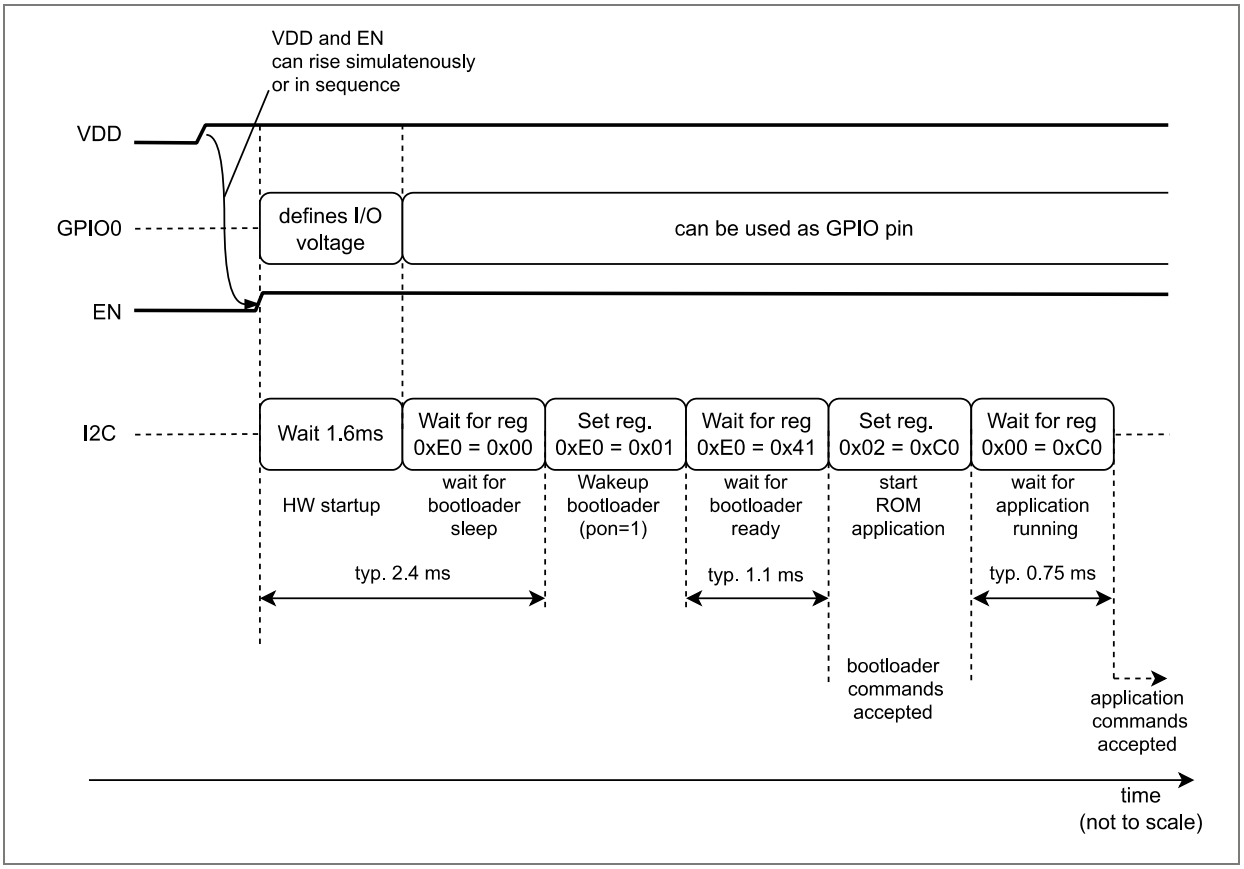

6.2.1 Example for startup and measurement

See below a simple example, assuming existing calibration data is stored in ‘calibData’ (14 Bytes array) in Python syntax. This example starts the TMF8806, downloads calibration data and starts a continuous measurement. After readout of the first result, it stops the measurement and powers down the TMF8806.

```
enableHigh() # Supply the device, and set pin EN=high
waitMs(1.6) # Wait until I2C is ready
while i2cTxRx(0x41, [0xE0], 1) != [0x00]: continue # Wait for the bootloader sleep
i2cTx(0x41, [0xE0, 0x01]) # Set PON=1
while i2cTxRx(0x41, [0xE0], 1) != [0x41]: continue # Wait for the bootloader ready
i2cTx(0x41, [0x02, 0xC0]) # Start the ROM application
while i2cTxRx(0x41, [0x00], 1) != [0xC0]: continue # Wait for the application
# Enable the INT pin for results
i2cTx(0x41, [0xE2, 0x01])
# Load the factory calibration stored
i2cTx(0x41, [0x20] + calibData)
# Start the continuous measurement with calibration data
i2cTx(0x41, [0x06, 0x00, 0x00, 0x11, 0x02, 0x00, 0x00, 0x06, 0x1e, 0x84, 0x03, 0x02])

# Wait for the next result
while not isIntPinLow(): continue
# Bulk-read the result including state data
result = i2cTxRx(0x41, [0x1D], 33)
print("The result #", result[3], "distance is: ", result[6] * 256 + result[5], "mm")
i2cTx(0x41, [0xE1, 0x01]) # Clear the interrupt flag

# Stop the periodic measurement
i2cTx(0x41, [0x10, 0xFF])
while i2cTxRx(0x41, [0x10], 2) != [0x00, 0xFF]: continue # Wait for command
i2cTx(0x41, [0xE1, 0x01]) # Clear a pending interrupt flag
enableLow() # Disable the device
```

Attention:

The above code example is for explanation only. It misses error handling and frequency skew correction, see TMF8806_Host_Driver_Communication_<latest version>.pdf.

6.3 Power modes

The default operating mode of TMF8806 is to continuously capture distance information and provide these results via the I²C interface. For low duty cycle applications, where power consumption is of prime importance the TMF8806 has an ultra-low power operation:

6.3.1 Ultra low-power operation

Figure 17: Ultra low power operation schematic

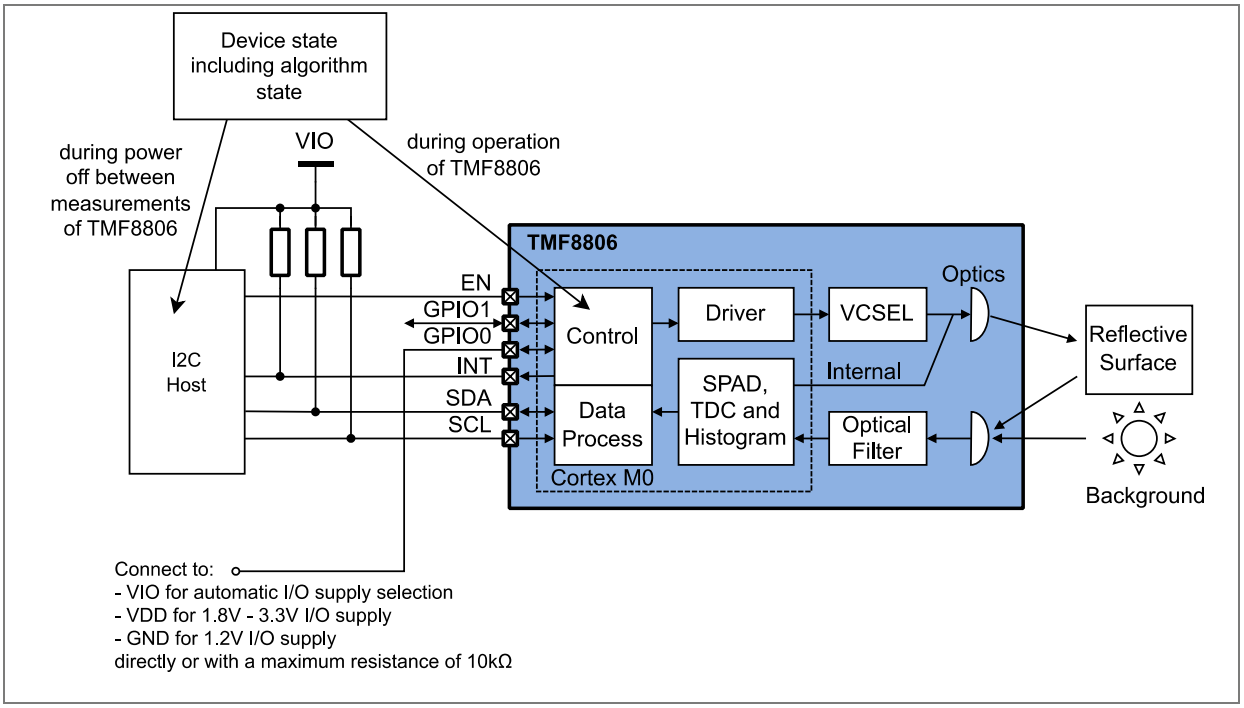

The host control controls the TMF8806 in ultra low power operation via I²C and EN line. It powers down the TMF8806 as long as possible between measurements. See flowchart in Figure 18. Write calibration and state registers see section 7.4, reading state data see section 7.3.9.

Figure 18: Ultra low power operation flowchart

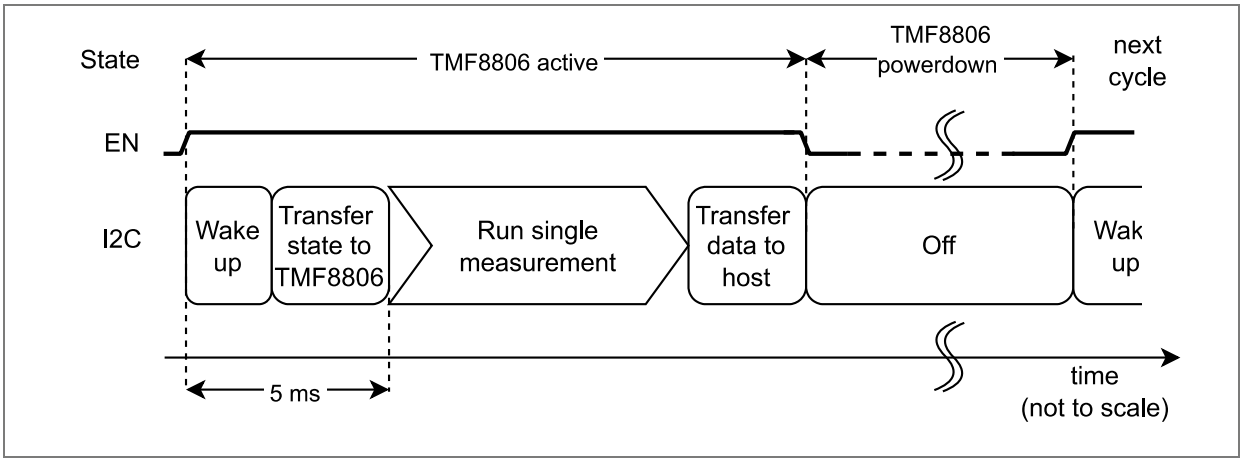

The ultra-low power operation can be combined with any distance mode from section 6.4.

6.4 Distance modes

Following distance modes can be selected:

- Short range mode with maximum distance 20 cm; especially useful for power savings if an application only needs to detect a close object.
- 2.5m mode = default mode
- 5m mode

Table 6: Distance mode overview

Distance mode	Maximum distance	Configured by	Notes
Short range	200 mm	*distanceEnabled*=0, *vcselClkDiv2*=0, *distanceMode*=0	Use for lowest power
2.5 m mode	2500 mm	*distanceEnabled*=1, *vcselClkDiv2*=0 (or 1 if you use spread spectrum), *distanceMode*=0	Default mode
5 m mode	5000 mm	*distanceEnabled*=1, *vcselClkDiv2*=1, *distanceMode*=1	Needs separate calibration data

Distance mode	Maximum distance	Configured by	Notes
10 m mode	10000 mm	*distanceEnabled*=1, *vcselClkDiv2*=1, *distanceMode*=1 *distanceMode10m*=1	Small firmware download required to enable this mode. Needs separate calibration data

Example: If an application only uses 5 m mode, it only needs one calibration data set in this mode.

Attention:

Calibration needs to be done for each of the distance modes used in an application. Only short range and 2.5 m mode can use a common calibration.

6.4.1 10 m mode – firmware version 4.14.11 or above

To enable 10 m operating mode, a small firmware download with version 4.14.11 or above is needed. For the firmware download and execution see the TMF8806_HostDriverCommunication_I2CCmds from ams-osram.com/tmf8806 or any of the provided ams OSRAM drivers described in section 8.5.

Once this firmware is executed, the register *distanceMode10m* can be used to enable 10 m mode.

Information:

If no firmware is downloaded, the internal ROM version is used and version 4.14.0 is reported. All functions except the 10 m mode are working with this ROM version.

6.5 Optical stack configurations

The TMF8806 has three configurations, which support different optical stacks:

Table 7: Optical stack configurations overview

Optical stack configurations	Typical optical stack(1)	Minimum distance	Configured by	Notes
Default	0.5 mm airgap 0.55 mm cover glass Rubber boot	0 mm(2) (10 mm)	*spadSelect*=0	Default setup
Large airgap	2.5 m mode: 1 mm airgap 5 m mode: 0.5 mm airgap 0.5 mm cover glass	20 mm	*spadSelect*=1	For designs with larger airgap
Thick cover glass	0 mm airgap 3.2 mm cover glass	40 mm	*spadSelect*=2	For designs with zero airgap and thick cover glass

(1) These are only examples of optical stack setups. See ams OSRAM optical design guide (ODG) for details. The optical crosstalk shall always be within the allowed range as shown in the ODG.
(2) A white or grey object can be detected at 0mm.

Attention:

Calibration needs to be done for each of the optical stack configurations used in an application.

6.6 EMC performance enhancements

Figure 19: Blocks with EMC performance enhancements highlighted

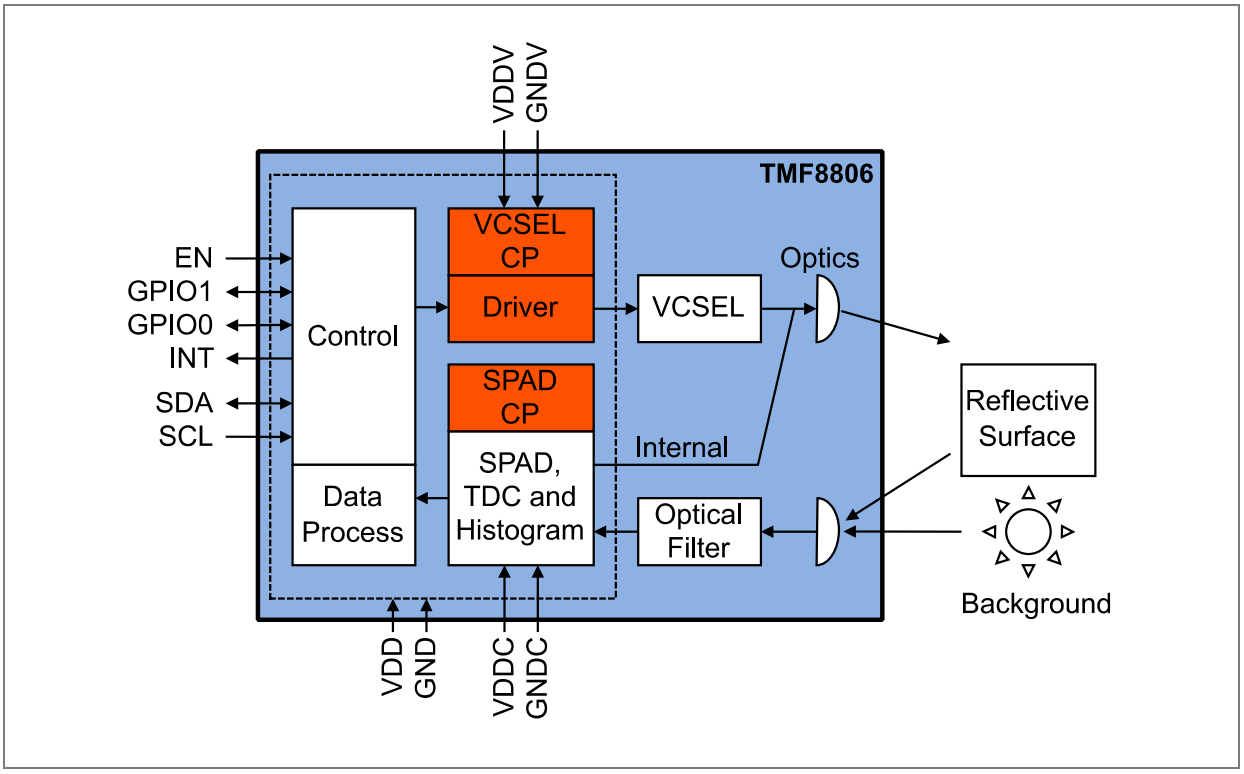

TMF8806 internally uses charge pumps (VCSEL CP and SPAD CP) for power management. These blocks are switching capacitors at high frequency to obtain higher voltages and therefore emit EMC noise. To attenuate this effect, the TMF8806 allows to spread this EMC emission much more smoothly over a wider frequency range.

Table 8: Spread spectrum configurations

Spread spectrum configured by	Affected block	Notes
Register *SpreadSpectrumSpadChargePump*: *amplitude*: Set to 15 *config*: Set to 1	SPAD charge pump	No side effects other than reducing EMC noise
Register *SpreadSpectrumVcselChargePump* *amplitude*: Set to 15 *config*: Set to 1	VCSEL charge pump	No side effects other than reducing EMC noise

Spread spectrum configured by	Affected block	Notes
Register *vcselClkSpreadSpecAmplitude* Valid range: 0 = no spread spectrum 1..3 = amplitude of spread spectrum	VCSEL driver	For 2.5m mode, vcselClkDiv2=1 is recommended, otherwise maximum distance is reduced For 5m distance mode, maximum distance is reduced.

6.7 I/O voltage selection

TMF8806 allows to use different I/O voltages. During startup[1] of TMF8806, the device checks the voltage on pin GPIO0 and compares it against $V_{1v2_threshold}$. If the voltage is below the threshold, 1.2 V I/O voltage, otherwise 1.8 V to 3.3 V I/O voltage is used.

Figure 20: I/O voltage selection logic

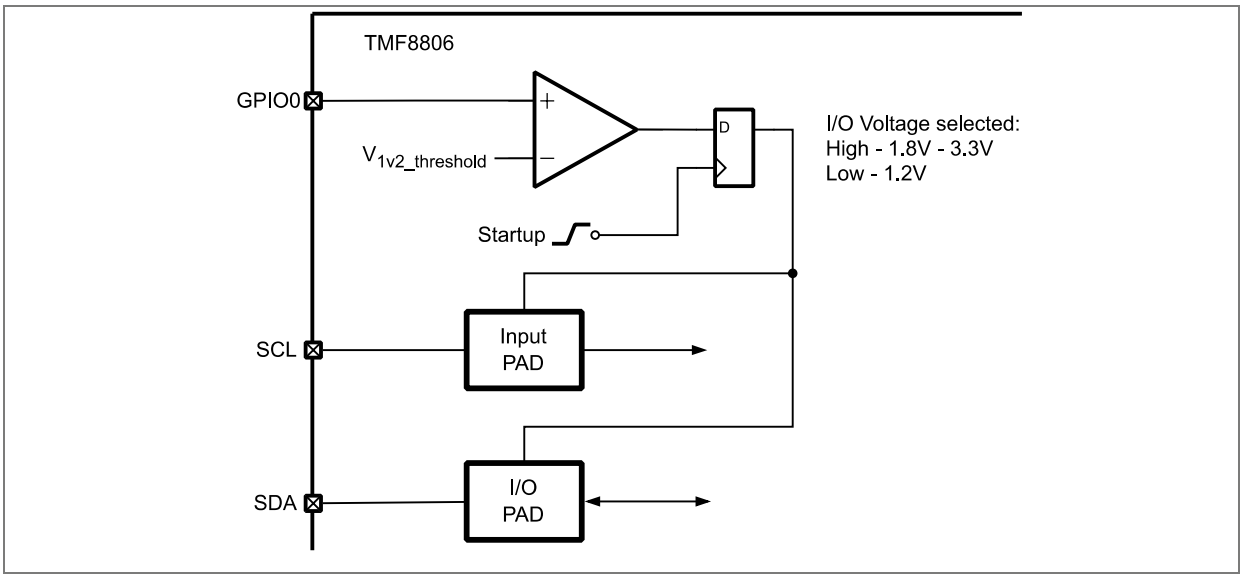

Once the I/O voltage selection is done, the pin GPIO0 can be used as a normal GPIO pin.

[1] Startup happens after the rising edge of EN signal. If EN is connected to VDD, it is the rising edge of VDD.

Information:

As I/O voltage selection status is stored inside a memory cell, this information is lost when EN=0 or VDD is powered down and it is performed again on the next startup.

6.8 Ranging acquisition timing

The typical ranging acquisition timing operates according to the following timing diagram:

Figure 21: Ranging timing diagram

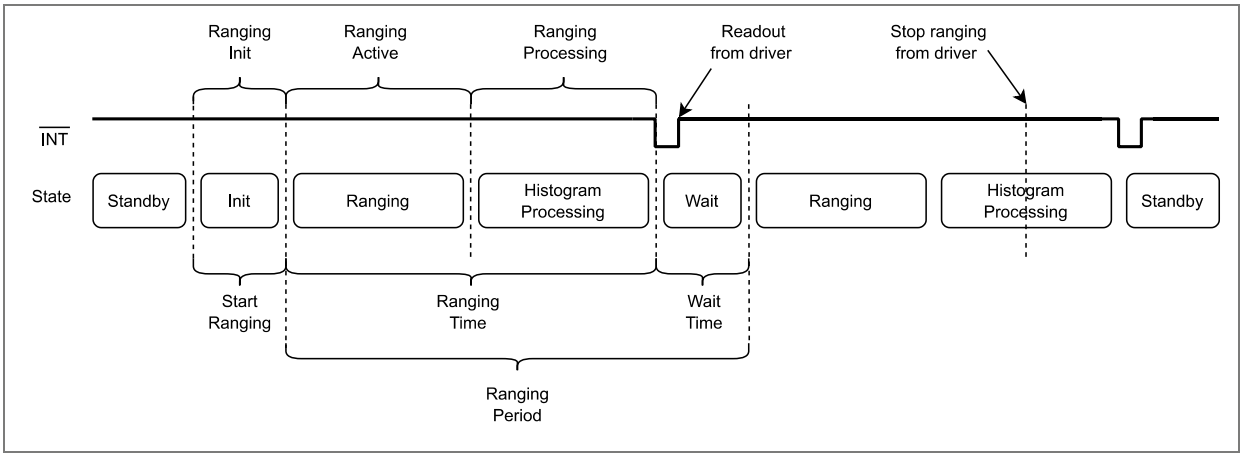

Ranging period is defined by *repetitionPeriodMs* and the wait time is adjusted accordingly. Ranging active is defined by the number of iterations (register *kIters*) configured and the VCSEL clock frequency.

If ranging time gets longer than *repetitionPeriodMs*, wait time is omitted. In this case, ranging period is equal to ranging time and *repetitionPeriodMs* is ignored.

6.9 Algorithm performance

The following section only applies for calibrated devices and in-application oscillator calibration using the reference driver.

The TMF8806 is embedded in the application using a 0.38 mm airgap and a glass with an IR ink with >90 % transmissivity. The glass thickness is 0.5 mm. A rubber boot or additional mask on the opaque ink is implemented according to TMF8806 optical design guide (external document).

6.9.1 Customer factory calibration

To achieve the performance described in the next sections, a calibration of the algorithm needs to be performed (command = 0x0A). The TMF8806 shall be embedded in the final application and the cover glass including the IR ink needs to be assembled. The calibration test shall be done in a housing with minimal ambient light and no target within 40 cm in field of view of the TMF8806 and iterations setting to 40M.

The TMF8806 shall be configured as it is used in the final application – this applies for distance modes (see section 6.4), optical stack configurations (see section 6.5) and *spadDeadTime* settings. If more than one mode or configuration is used in an application, separate calibration data sets are required.

The TMF8806 generates a calibration data set which shall be permanently stored on the host.

On each power-up of the TMF8806 the calibration data set is sent by I²C to the TMF8806 prior to execution of any algorithms (command=0x02).

6.9.2 SPAD dead time setting

The dead time setting defines the recovery time of each SPAD after a pulse is triggered.

For very high ambient light, the best setting is always the shortest dead time (setting 7 which is 4 ns). For better accuracy at short range, use a long dead time setting (setting 0 which is 97ns). For any other use case, the default setting (setting 4 which is 16 ns) is typically the best setting.

The dead time is controlled by register *spadDeadTime*.

6.9.3 Algorithm timings and performance parameters

The TMF8806 can adjust the number of iterations and detection threshold using registers *kiters* and *threshold*. A default mode is defined as having 900 k iterations, 2.5 m maximum distance and *threshold*=0 (internally 6 will be used instead). The different timings are shown in section 4.1 on page 12 and described in section 6.8.

The algorithm reports distance information of the closest object in 1 mm steps.

Using the timings described above, the performance as shown in section 4.1 on page 12 is achieved.

6.10 VCSEL

Internal protection ensures that no single point of failure will cause the VCSEL to violate the Class 1 Laser Safety.

- Laser Safety — Class 1
- VCSEL Pulse Rep Rate — 26.6 ns (37.6 MHz)

  If *vcselClkDiv2*=1 and *distanceMode10m*=0, the frequency is divided by two to 53.2 ns (18.8 MHz)

  If *vcselClkDiv2*=1 and *distanceMode10m*=1 and firmware is downloaded as described in section 6.4.1, the frequency is divided by four to 106.4 ns (9.4 MHz)

6.11 Typical optical characteristics

Table 9: VCSEL field of illumination (FOI)

Definition	VCSEL field of illumination (FOI)
1/e^2	19º
Full width from 5% of maximum up to maximum	21º
Full width from 1% of maximum up to maximum	25º

Table 10: TOF sensor field of view (FOV)

Optical stack configuration	Short range (<20cm)	Long range
Default	52º	30º
Large airgap or thick cover glass	30º	30º

The SPAD FoV angular response uses the full TMF8806 SPADs only for short distances and default mode. The SPAD FoV is reduced when the TMF8806 operates in any other mode. This helps to improve ambient light tolerance[2] and allows operating the device with higher amounts of crosstalk.

Figure 22: FOI/FOV of TMF8806 (used 1/e^2 for FOI as example)

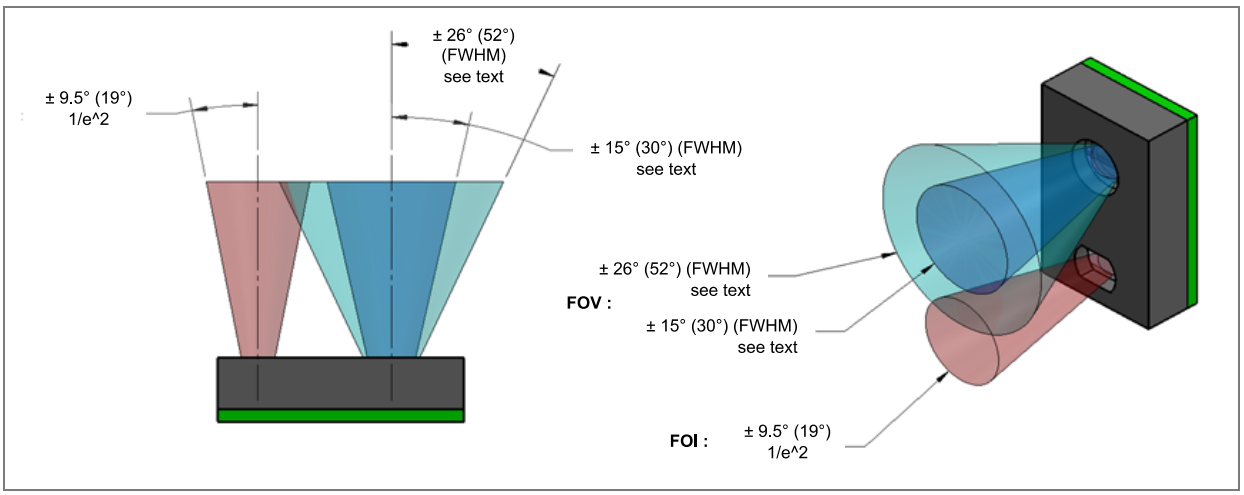

6.11.1 Filter characteristics

- FWHM 114 nm
- Passband center wavelength 940 nm
- Stopband wavelengths 350 nm – 883 nm, 997 nm – 1100 nm

[2] It depends on the size and reflectivity of the object if TMF8806 algorithm detects off-axis objects.

6.12 I²C protocol

The TMF8806 is controlled by an I²C bus, one interrupt pin and two GPIO pins.

Additionally see ams OSRAM device driver and/or application note TMF8806_Host_Driver_Communication_*.pdf for a detailed explanation of the I²C communication itself.

The device uses I²C serial communication protocol for communication. The device supports 7-bit chip addressing (default: 0x41) and standard, fast mode and fast mode plus modes. Read and Write transactions comply with the standard set by Philips (now NXP). For a complete description of the I²C protocol, please review the NXP I²C design specification.

Figure 23: I²C timings

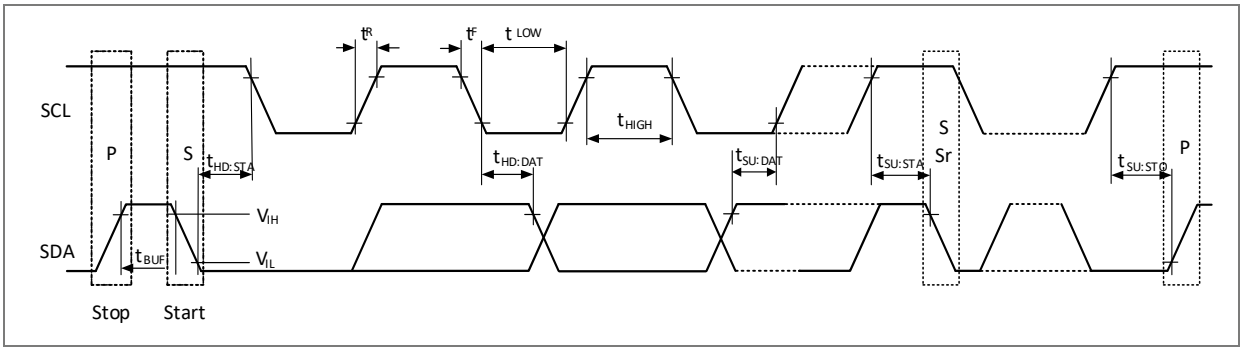

The TMF8806 support following I²C operating modes:

- Standard mode – up to 100 kBit/s
- Fast-mode – up to 400 kBit/s
- Fast-mode-plus – up to 1 MBit/s

Table 11: I²C symbol definition

Symbol	Definition	R/W	Note
S	Start condition after stop	R	1-bit
Sr	Repeated start (start condition end without preceding stop condition)	R	1-bit
ADR	Slave address 7 bits = default 0x41	R	Slave address
WA	Word address	R	8-bit
A	Acknowledge	W	1-bit
N	No Acknowledge	R	1-bit
Data	Data/write	R or W	8-bit
Data(n)	Data/read	W	8-bit

Symbol	Definition	R/W	Note
P	Stop condition	R	1-bit
WA++	Slave increment word address	R	During acknowledge

Internal to the device, an 8-bit buffer stores the register address location of the byte to read or write. This buffer auto-increments upon each byte transfer and is retained between transaction events (i.e. valid even after the master issues a P (Stop condition) and the I²C bus is released). During consecutive Read transactions, the future/repeated I²C Read transaction may omit the memory address byte normally following the chip address byte; the buffer retains the last register address +1.

A Write transaction consists of an S, ADR, 0 (R/W flag), WA, Data (n), and P. Following each byte (9th clock pulse) the slave places an A or NA (ACK/NACK) on the bus. If NACK is transmitted by the slave, the master may issue a P.

Figure 24: Byte write and page write commands

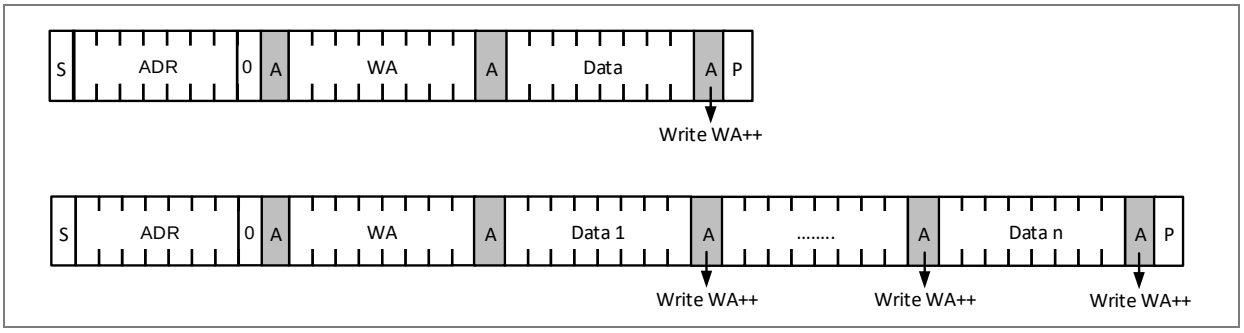

A Read transaction consists of a S, ADR, 0 (R/W flag), WA, Sr, ADR, 1 (R/W flag), Data(n) and P. Following all but the final byte the master places an A (ACK) on the bus (9th clock pulse). Termination of the Read transaction is indicated by an N (NACK) being placed on the bus by the master, followed by STOP.

Figure 25: Random read and sequential read command (example shows 2 bytes)

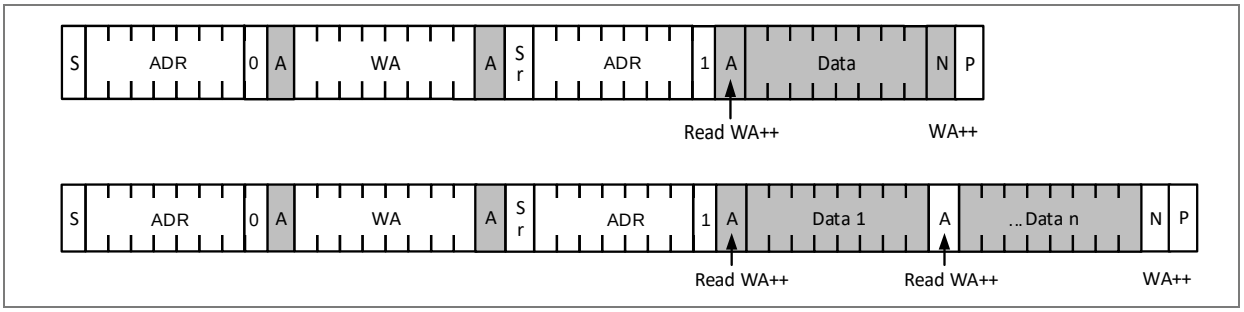

The default I²C address is 0x41. The address can be changed after power-up. Use the enable pin to enable only one device at a time to provide unique device addresses – see section 8.1.1.

The device is I3C tolerant – therefore it can coexist with I3C devices on the same bus. TMF8806 communicates in legacy I²C mode of the I3C bus.

7 Register description

7.1.1 APPID register (Address 0x00)

Table 12: APPID register

Addr: 0x00		APPID		
Field	**Name**	**Rst**	**Type**	**Description**
7:0	*appid*	0	RW	Currently running application: 0xC0 App0 – Measurement application running 0x80 bootloader running

7.1.2 APPREV_MAJOR register (Address 0x01)

Table 13: APPREV_MAJOR register

Addr: 0x01		APPREV_MAJOR		
Field	**Name**	**Rst**	**Type**	**Description**
7:0	*apprevMajor*	0	RW	Application major revision

7.1.3 APPREQID register (Address 0x02)

Table 14: APPREQID register

Addr: 0x02		APPREQID		
Field	**Name**	**Rst**	**Type**	**Description**
7:0	*appReqid*	0	RW	Application that shall be started, set this to 0x80 … bootloader 0xC0 … App0 – measurement application and wait until register 0x00 (APPID) shows this as application.

7.1.4 ENABLE register (Address 0xE0)

Table 15: ENABLE register

Addr: 0xE0		ENABLE		
Field	**Name**	**Rst**	**Type**	**Description**
7	*cpu_reset*	0	RW_SC	Write a '1' here to reset CPU. This generates global reset, fully resetting CPU and all CPU registers. The bit resets itself, no need to explicitly clear it.
6	*cpu_ready*	0	RO	CPU is ready to handle I²C - if this bit is zero, then only the registers 0xe0 and above are usable, the memory mapped I²C space is not used.
0	*pon*	1	R_PUSH	1=Activate oscillator; 0=Ask CPU to go to standby Activating the oscillator is implemented in hardware. Whenever this register is '0' and a '1' is being written, the oscillator is being started and CPU receives a PON1 interrupt. It is implemented in the bootloader to execute a reset at this point, but the application goes to an IDLE state. De-activating the oscillator is a software assisted process. It is important that the CPU powers down all modules properly before turning off the oscillator, therefore this is implemented in firmware. So, writing a '0' to this register will trigger an internal CPU interrupt. The firmware, after powering down everything, sets the device into standby state.

7.1.5 INT_STATUS register (Address 0xE1)

Table 16: INT_STATUS register

Addr: 0xE1		INT_STATUS		
Field	**Name**	**Rst**	**Type**	**Description**
1	*int2*	0	R_PUSH1	Raw histogram available interrupt for App0; asserted when a raw histogram can be retrieved from I²C. **int2 status**. If bit is asserted, and int2_enab is asserted as well, then the INT pin will be pulled low. Writing a '1' here will clear int1 condition.
0	*int1*	0	R_PUSH1	Object detection interrupt for App0; asserted when a result from object detection is available. **int1 status**. If bit is asserted, and int1_enab is asserted as well, then the INT pin will be pulled low. Writing a '1' here will clear int1 condition. **Note:** An interrupt is raised on every result from object detection including no-target unless persistence is set > 0

7.1.6 INT_ENAB register (Address 0xE2)

Table 17: INT_ENAB register

Addr: 0xE2	INT_ENAB			
Field	**Name**	**Rst**	**Type**	**Description**
1	*int2_enab*	0	RW	0 = Disabled, 1 = Enabled -> INT output is active if int2 flag is "1".
0	*int1_enab*	0	RW	0 = Disabled, 1 = Enabled -> INT output is active if int1 flag is "1".

7.1.7 ID register (Address 0xE3)

Table 18: ID register

Addr: 0xE3	ID			
Field	**Name**	**Rst**	**Type**	**Description**
5:0	*id*	09h	RO	Chip ID, reads 09h – do not rely on register bits 6 and 7 of this register.

7.1.8 REVID register (Address 0xE4)

Table 19: REVID register

Addr: 0xE4	REVID			
Field	**Name**	**Rst**	**Type**	**Description**
2:0	*rev_id*	0	RO	Chip revision ID

7.2 App0 registers

Following registers are only available if *appid*=0xC0 (App0):

7.2.1 CMD_DATA9 to 0 registers (Address 0x06-0x0F)

For detailed description about the content of cmd_data9…cmd_data0, see COMMAND register (Address 0x10). All registers are 8 bits wide:

Table 20: CMD_DATA9 to 0 registers

Addr: 0x06-0x0F	CMD_DATA9 to 0 registers			
Addr	**Name**	**Rst**	**Type**	**Description**
0x06	*cmd_data9*	0	W	Command data 9
0x07	*cmd_data8*			Command data 8
0x08	*cmd_data7*			Command data 7
0x09	*cmd_data6*			Command data 6
0x0A	*cmd_data5*			Command data 5
0x0B	*cmd_data4*			Command data 4
0x0C	*cmd_data3*			Command data 3
0x0D	*cmd_data2*			Command data 2
0x0E	*cmd_data1*			Command data 1
0x0F	*cmd_data0*			Command data 0

7.2.2 COMMAND register (Address 0x10)

Table 21: COMMAND register

Addr: 0x10	COMMAND			
Field	**Name**	**Rst**	**Type**	**Description**
7:0	*command*	0	RO	Command execution control register. Individual commands are described in the following tables. Direct the device to control or select contents of the registers from 0x20...0xDF Upon successful execution of a command, this register reads back 0x00 and command is copied to register *previousCommand*.

Table 22: Command 0x00 – no command

Register 0x10	Command 0x00 – no command
0x00	No command

Table 23: Command 0x02 – start measurement

Register 0x10	Command 0x02 – start measurement	
0x02	Set flag to perform target distance measurement with 10 bytes configuration **cmd_data9** to **cmd_data0**: **cmd_data9** = *SpreadSpectrumSpadChargePump*; default 0. Configuration of EMC enhancement for SPAD charge pump. For allowed settings see section 6.6.	
	Bits	**Definition**
	3:0	*amplitude*: To enable the SPAD charge pump's maximum spread spectrum, set the value to 15. For disabling, set it to 0.
	5:4	*config*: Set to 1 to use spread spectrum of SPAD charge pump otherwise set to 0.
	7:6	Set to '0'
	cmd_data8 = *SpreadSpectrumVcselChargePump*; default 0. Configuration of EMC enhancement for VCSEL charge pump. For allowed settings see section 6.6.	
	Bits	**Definition**
	3:0	*amplitude*: To enable the VCSEL charge pump's maximum spread spectrum, set the value to 15. For disabling, set it to 0.
	5:4	*config*: Set to 1 to use spread spectrum of VCSEL charge pump otherwise set to 0.
	7:6	Set to '0'
	cmd_data7 = Bit mask which calibration/state data was downloaded from the host to TMF8806 prior to setting this command:	
	Bits	**Definition**
	0	*factoryCal*: When 1 data from register 0x20 onward includes factory calibration
	1	*algState*: If set, also set *factoryCal* =1. Data from register 0x20 onwards includes factory calibration and algorithm state.
	2	Set to '0'
	5:3	*spadDeadTime*: SPAD recovery time, 0=longest, 7=shortest dead time; if unsure use default=4; shorter SPAD dead time (higher number of the register *spadDeadTime*) improve sunlight performance but degrade short range accuracy
	7:6	*spadSelect:* Optical stack configuration – see section 6.5.
	cmd_data6 = Bit mask which algorithm is used	
	Bits	**Definition**
	0	Set to '0'
	1	*distanceEnabled*: If '0' only short range mode is operating – see section 6.4

Register 0x10	Command 0x02 – start measurement	
	2	*vcselClkDiv2*: If set, operates the VCSEL clock at half frequency and 1/4th if *distanceMode10m* is set - see section 6.10 - and doubles the ranging active time where the VCSEL is enabled. It is recommended to use together with EMC performance enhancements see section 6.6.
	3	*distanceMode*: When 0 measure up to 2.5 m. When 1 measure up to 5 m respectively 10 m if *distanceMode10m* is set.
	4	*immediateInterrupt* – When 1 target distance measurement will immediately report to the host an interrupt of the capturing caused by a GPIO event; when 0, will only report to the host when target distance measurement was finished
	5	Reserved, keep at 0
	6	*distanceMode10m*: Only with firmware download described in section 6.4.1, this register is used to enable 10 m mode. Otherwise set this register to 0. 0: 10 m mode disabled, use for short range, 2.5 m mode and 5 m mode or without firmware download 1: 10 m distance mode
	7	*algKeepReady* - When 1 do not go to standby between measurements (faster measurement times but higher current consumption)
	cmd_data5 = Bits for GPIO control	
	Bits	**Definition**
	3:0	GPIO0 settings – *gpio0*: 0 - Disabled (default after startup) 1 - Input: Active low disables collection, immediately abandoning current measurement. Returning to high restarts new measurement 2 - Input: Active high disables collection, immediately abandoning current measurement. Returning to low restarts new measurement 3 - Output: VCSEL pulse output – see cmd_data4 4 - Output low 5 - Output high 6 - Output is high when an object was detected otherwise low 7 - Output is low when an object was detected otherwise high 8 - Output is high-Z when an object was detected otherwise low (open drain, low on no-detect) 9 - Output is low when an object was detected otherwise high-Z (open drain, low on detect) 10…15 - Reserved, do not use

Register 0x10	Command 0x02 – start measurement
	7:4 GPIO1 settings – *gpio1*: 0 - Disabled (default after startup) 1 - Input: Active low disables collection, immediately abandoning current measurement. Returning to high restarts new measurement 2 - Input: Active high disables collection, immediately abandoning current measurement. Returning to low restarts new measurement 3 - Output: VCSEL pulse output – see cmd_data4 4 - Output low 5 - Output high 6 - Output is high when an object was detected otherwise low 7 - Output is low when an object was detected otherwise high 8 - Output is high-Z when an object was detected otherwise low (open drain, low on no-detect) 9 - Output is low when an object was detected otherwise high-Z (open drain, low on detect) 10…15 - Reserved, do not use
	cmd_data4 - *alsDelay100µs* - If cmd_data5 enables VCSEL pulse output for GPIO0 and/or GPIO1, cmd_data4 sets its timings as follows:

Value	Meaning
0	No signal
1	GPIOx, rises 0 µs time before VCSEL pulse starts
2	GPIOx rises 100 µs before VCSEL pulse
3	GPIOx rises 200 µs before VCSEL pulse and so on

The falling edge of GPIOx happens at the same time the VCSEL stops emitting light.

cmd_data3 = Object detection threshold and spread spectrum mode

Bits	Definition
5:0	*threshold* - Object detection threshold – use 0 as default value
7:6	*vcselClkSpreadSpecAmplitude*: If set, avoids aliasing of objects into measurement range and improving EMC emission – see section 6.6. Use together with *vcselClkDiv2*=1 otherwise maximum distance is reduced and false objects at far distance can occur.

cmd_data2 = *repetitionPeriodMs* in mSec, use 0 for single measurement, 0xFE for 1000 ms and 0xFF for 2000 ms; if the repetition period is set lower than the ranging time for this mode, the TMF8806 runs at it maximum possible speed (best effort approach) – see section 6.8.

cmd_data1 = *kIters* - Number of iterations, low byte; 1 LSB=1 k

cmd_data0 = *kIters* - Number of iterations, high byte; 1 LSB=1 k*256

Once a measurement is finished, the interrupt is asserted. If *int1_enab*=1 the pin INT is asserted as well. Additionally, the transaction ID tid is updated.

Table 24: Command 0x08 – write additional configuration

Register 0x10	Command 0x08 – write additional configuration	
0x08	Write additional configuration for **cmd_data4** = *persistence* 8-bit value for interrupt suppression	
	Value	**Definition**
	0	Any result (detect and no-detect) will trigger an interrupt
	1-255	An interrupt will only be triggered if the detected distance is >= *low_threshold* in [mm] and distance <= *high_threshold* in [mm] and the detection happened at least <*persistence*> consecutive times
	cmd_data3 = *low_threshold* 8-bit LSB value in [mm] **cmd_data2** = *low_threshold* 8-bit MSB value in [mm] * 256 **cmd_data1** = *high_threshold* 8-bit LSB value in [mm] **cmd_data0** = *high_threshold* 8-bit MSB value in [mm] * 256	

Table 25: Command 0x09 – read additional configuration

Register 0x10	Command 0x09 – read additional configuration
0x09	Read additional configuration for application. After the command is executed, *persistence*, *low_threshold* and *high_threshold* are stored in registers 0x20 to 0x24 – see section 7.7 Interrupt suppression registers

Table 26: Command 0x0A – customer factory calibration

Register 0x10	Command 0x0A – customer factory calibration
0x0A	Customer factory calibration - described in section 6.9.1. **cmd_data9**…**cmd_data0** needs to be configured as with command=0x02 before factory calibration is executed. This is required as calibration is changing depending on configuration like distance modes – see section 6.4. Perform factory calibration in the final customer application including cover glass, no ambient light and no target. The result from the factory calibration is stored from register 0x20 onwards (14 bytes).

Table 27: Command 0x0F – gpio control

Register 0x10	Command 0x0F – gpio control	
0x0F	Set gpio control setting without performing a measurement as commands 0x02 would do: **cmd_data0** = Bits for GPIO control	
	Bits	**Definition**
	3:0	GPIO0 settings – *gpio0*: 0 - Disabled (default after startup) 1 - Input: Active low disables collection, immediately abandoning current measurement. Returning to high restarts new measurement. 2 - Input: Active high disables collection, immediately abandoning current measurement. Returning to low restarts new measurement. 3 - Output: VCSEL pulse output – see cmd_data4 4 - Output low 5 - Output high 6 - Output is high when an object was detected otherwise low 7 - Output is low when an object was detected otherwise high 8 - Output is high-Z when an object was detected otherwise low (open drain, low on no-detect) 9 - Output is low when an object was detected otherwise high-Z (open drain, low on detect) 10…15 - Reserved, do not use
	7:4	GPIO1 settings – *gpio1*: 0 - Disabled (default after startup) 1 - Input: Active low disables collection, immediately abandoning current measurement. Returning to high restarts new measurement 2 - Input: Active high disables collection, immediately abandoning current measurement. Returning to low restarts new measurement 3 - Output: VCSEL pulse output – see cmd_data4 4 - Output low 5 - Output high 6 - Output is high when an object was detected otherwise low 7 - Output is low when an object was detected otherwise high 8 - Output is high-Z when an object was detected otherwise low (open drain, low on no-detect) 9 - Output is low when an object was detected otherwise high-Z (open drain, low on detect) 10…15 - Reserved, do not use

Table 28: Command 0x30 – enable histogram readout

Register 0x10	Command 0x30 – enable histogram readout	
0x30	Enable histogram readout; the internal state machine will stop when a histogram (e.g. calibration) is available and wait for readout by the host. If the selected histogram is readout, the host shall continue the state machine by sending command 0x32. **cmd_data3** = Bitmask for the histograms to be readout:	
	Bits	**Definition**
	0	Always set to '0'
	1	Set to get electrical calibration histograms
	3:2	Always set to '00'
	4	Set to get short distance histograms
	6:5	Always set to '00'
	7	Set to get distance measurement histograms. Bin 127 respectively bin 255 is used as scaling factor for this type of histograms. The scaling factor is 0 for no scaling, 1 for 2x, 2 for 4x and so on.
	cmd_data2 = Set to 0x00 **cmd_data1** = Bitmask for pileup correct histograms readout:	
	Bits	**Definition**
	0	Set to get pileup corrected distance measurement histograms
	1	Set to get pileup corrected sum histogram
	7:2	Always set to 0
	cmd_data0 = Set to 0x00 Once the bitmask is set, the device is programmed to stop when the histogram is available. Set command=0x04 0x03 to perform the measurement.	

Table 29: Command 0x32 – continue histogram readout

Register 0x10	Command 0x32 – continue histogram readout
0x32	After the host has readout the histogram, continue with internal processing.

Table 30: Command 0x47 – read out serial number

Register 0x10	Command 0x47 – read out serial number
0x47	Read out serial number – results see section 7.6 Serial number readout

Table 31: Command 0x49 – change the I²C address

Register 0x10	Command 0x49 – change the I²C address	
0x49	Change the I²C address of TMF8806 **cmd_data0** = Condition if I²C address is changed; program the GPIOs input/output accordingly before using this feature (commands 0x02 or 0x0F):	
	Bits	**Definition**
	0	mask_gpio0
	1	mask_gpio1
	2	value_gpio0
	3	value_gpio1
	7:4	Always set to 0
	The I²C address change is executed only if (mask_gpio1 & GPIO1) << 1 + (mask_gpio0 & GPIO0) == value_gpio1 << 1 + value_gpio0 where GPIO1 and GPIO0 is the status on pin GPIO1 and pin GPIO0. If this conditional programming is not used, set cmd_data0 to 0x00. **cmd_data1** = New I²C address	
	Bits	**Definition**
	0	Set to '0'
	7:1	New I²C address to be used

Table 32: Command 0x80 – read histogram

Register 0x10	Command 0x80 – read histogram
0x80	Start histogram readout; see host communication guide document for details. **Note:** At the end of this transaction, registers 0x20-0x9F, *register_contents* and *tid* will be updated.

Table 33: Command 0xFF – stop command

Register 0x10	Command 0xFF – stop command
0xFF	Stop whatever TMF8806 is doing as soon as possible and reenter the idle state. This command will stop continuous measurement.

7.2.3 PREVIOUS register (Address 0x11)

Table 34: PREVIOUS register

Addr: 0x11		PREVIOUS		
Field	**Name**	**Rst**	**Type**	**Description**
7:0	*previousCommand*	0	RO	Previous command that was executed or current for measurement command 0x02 and factory calibration command 0x0A.

7.2.4 APPREV_MINOR register (Address 0x12)

Table 35: APPREV_MINOR register

Addr: 0x12		APPREV_MINOR		
Field	**Name**	**Rst**	**Type**	**Description**
7:0	*appRevMinor*	0	RO	Application minor revision

7.2.5 APPREV_PATCH register (Address 0x13)

Table 36: APPREV_PATCH register

Addr: 0x13		APPREV_PATCH		
Field	**Name**	**Rst**	**Type**	**Description**
7:0	*appRevPatch*	0	RO	Application patch number

7.2.6 STATE register (Address 0x1C)

Table 37: STATE register

Addr: 0x1C		STATE			
Field	**Name**	**Rst**	**Type**	**Description**	
7:0	*state*	0	RO	State of current operation.	
				Reading	**Meaning**
				2	Error
				Any other value	Ok

7.2.7 STATUS register (Address 0x1D)

Table 38: STATUS register

Addr: 0x1D		STATUS			
Field	**Name**	**Rst**	**Type**	**Description**	
7:0	*status*	0	RO	Status or current general operation.	
				Reading	**Meaning**
				00h-0Fh	OK
				10h-FFh	Error

7.2.8 REGISTER_CONTENTS register (Address 0x1E)

Table 39: REGISTER_CONTENTS registers

Addr: 0x1E		REGISTER_CONTENTS			
Field	**Name**	**Rst**	**Type**	**Description**	
7:0	*register_contents*	0	RO	Current contents of the I²C RAM from 0x20 to 0xDF; the coding is as follows:	
				Reading	**Meaning**
				0Ah	Calibration data
				47h	Serial number

Addr: 0x1E		REGISTER_CONTENTS		
Field	**Name**	**Rst**	**Type**	**Description**
				55h Results for commands 0x02
				80h-93h Raw histogram data where 80h = TDC0, bin 0…63 81h = TDC0, bin 64…127 82h = TDC0, bin 128...195 83h = TDC0, bin 196...255 84h = TDC1, bin 0…63 … 93h = TDC4, bin 196…255

7.2.9 TID register (Address 0x1F)

Table 40: TID register

Addr: 0x1F		TID		
Field	**Name**	**Rst**	**Type**	**Description**
7:0	*tid*	0	RO	Unique transaction ID, changes with every update of register map by TOF.

7.3 Object detection results

Following registers are only available if *appid*=0x55 (Object detection results of *command*=0x02):

7.3.1 RESULT_NUMBER register (Address 0x20)

Table 41: RESULT_NUMBER register

Addr: 0x20		RESULT_NUMBER		
Field	**Name**	**Rst**	**Type**	**Description**
7:0	*result_num*	0	RO	Result number incremented every time when there is a unique answer.

7.3.2 RESULT_INFO register (Address 0x21)

Table 42: RESULT_INFO register

Addr: 0x21		RESULT_INFO		
Field	**Name**	**Rst**	**Type**	**Description**
7:6	*measStatus*	0	RO	When *immediateInterrupt* == 1 Will indicate the status of the measurement: **Reading** / **Meaning** 0 – Short distance capture interrupted, using previous short distance only result 1 – Short distance capture interrupted, using previous short and long distance result 2 – Long distance capture interrupted; result is from short distance algorithm only 3 – Complete result (short and long distance algorithm) When algImmediateInterrupt == 0 Will indicate the status of the measurement: **Reading** / **Meaning** 0 – Measurement was not interrupted 1 – Reserved 2 – Measurement was interrupted (delay) by GPIO interrupt 3 – Reserved
5:0	*reliability*	0	RO	Reliability of object - valid range 0...63 where 63 is best where 0 … no object detected 1 … result from short range algorithm but device was **not** calibrated 10 … result from short range algorithm and device is calibrated any other value … result from long range algorithm.

7.3.3 DISTANCE_PEAK_0 register (Address 0x22)

Table 43: DISTANCE_PEAK_0 register

Addr: 0x22		DISTANCE_PEAK_0		
Field	**Name**	**Rst**	**Type**	**Description**
7:0	*distance_peak[7:0]*	0	RO	Distance to the peak in [mm] of the object, least significant byte

7.3.4 DISTANCE_PEAK_1 register (Address 0x23)

Table 44: DISTANCE_PEAK_1 register

Addr: 0x23		DISTANCE_PEAK_1		
Field	**Name**	**Rst**	**Type**	**Description**
7:0	*distance_peak[15:8]*	0	RO	Distance to the peak in [mm] of the object, most significant byte

7.3.5 SYS_CLOCK_0 register (Address 0x24)

The sys clock register is a running timer information – this value is counting upwards (and wraps around to 0 again) while the internal clock is running. As it is derived from the internal RC oscillator and distance information depends on its accuracy, it can be used to correct an algorithm result by comparing this clock with a more accurate clock inside the host. It is recommended to use several measurement cycles for this clock correction.

For correctly updating of these registers by TMF8806, an I²C blockread starting from address 0x1D until 0x27 shall be done[3].

Table 45: SYS_CLOCK_0 register

Addr: 0x24		SYS_CLOCK_0		
Field	**Name**	**Rst**	**Type**	**Description**
7:0	*sys_clock[7:0]*	0	RO	System clock/time stamp in units of 0.213 µs = 1 / 4.7 MHz

7.3.6 SYS_CLOCK_1 register (Address 0x25)

Table 46: SYS_CLOCK_1 register

Addr: 0x25		SYS_CLOCK_1		
Field	**Name**	**Rst**	**Type**	**Description**
7:0	*sys_clock[15:8]*	0	RO	System clock/time stamp in units of 0.213 µs = 1 / 4.7 MHz

[3] sys_clock is only valid if its LSB bit is one.

7.3.7 SYS_CLOCK_2 register (Address 0x26)

Table 47: SYS_CLOCK_2 register

Addr: 0x26		SYS_CLOCK_2		
Field	**Name**	**Rst**	**Type**	**Description**
7:0	*sys_clock[23:16]*	0	RO	System clock/time stamp in units of 0.213 µs = 1 / 4.7 MHz

7.3.8 SYS_CLOCK_3 register (Address 0x27)

Table 48: SYS_CLOCK_3 register

Addr: 0x27		SYS_CLOCK_3		
Field	**Name**	**Rst**	**Type**	**Description**
7:0	*sys_clock[31:24]*	0	RO	System clock/time stamp in units of 0.213 µs = 1 / 4.7 MHz

The algorithm state information is captured in the next registers. To allow resume of operation after power-off, algorithm state can be stored temporarily inside the host and once after power-on of TMF8806 restored to resume operation.

7.3.9 STATE_DATA_0 to 10 registers (Address 0x28-0x32)

Table 49: STATE_DATA_0 to 10 registers

Addr: 0x28-0x32		STATE_DATA registers		
Addr	**Name**	**Rst**	**Type**	**Description**
0x28	*state_data_0*	0	RO	Algorithm state data (11 Bytes) for reading from TMF8806 to host. All registers are 8 bits wide and the content hold the current state of the algorithm. This is required especially for ultra low operation, where the algorithm state is transferred from TMF8806 to the host before the TMF8806 enters power down – see section 6.3.1.
0x29	*state_data_1*			
0x2A	*state_data_2*			
0x2B	*state_data_3*			
0x2C	*state_data_4*			
0x2D	*state_data_5*			
0x2E	*state_data_6*			
0x2F	*state_data_7*			

Addr: 0x28-0x32	STATE_DATA registers			
Addr	**Name**	**Rst**	**Type**	**Description**
0x30	*state_data_8*			
0x31	*state_data_9*			
0x32	*state_data_10*			

7.3.10 TEMPERATURE register (Address 0x33)

Table 50: TEMPERATURE register

Addr: 0x33	TEMPERATURE			
Field	**Name**	**Rst**	**Type**	**Description**
7:0	*temperature*	0	RO	8-bit signed integer of the TMF8806 sensor DIE junction temperature in ºCelsius (e.g. “25” means 25 ºC)

Reference hits and object hits are used for information purposes of the target object and are only reported if a target is detected with the distance algorithm.

7.3.11 REFERENCE_HITS_0 register (Address 0x34)

Table 51: REFERENCE_HITS_0 register

Addr: 0x34	REFERENCE_HITS_0			
Field	**Name**	**Rst**	**Type**	**Description**
7:0	*reference_hits[7:0]*	0	RO	Sum of the reference SPADs hits during the distance measurement; zero if no object is detected or distance algorithm is not used

7.3.12 REFERENCE_HITS_1 register (Address 0x35)

Table 52: REFERENCE_HITS_1 register

Addr: 0x35		REFERENCE_HITS_1		
Field	**Name**	**Rst**	**Type**	**Description**
7:0	*reference_hits[15:8]*	0	RO	Sum of the reference SPADs hits during the distance measurement; zero if no object is detected or distance algorithm is not used

7.3.13 REFERENCE_HITS_2 register (Address 0x36)

Table 53: REFERENCE_HITS_2 register

Addr: 0x36		REFERENCE_HITS_2		
Field	**Name**	**Rst**	**Type**	**Description**
7:0	*reference_hits[23:16]*	0	RO	Sum of the reference SPADs hits during the distance measurement; zero if no object is detected or distance algorithm is not used

7.3.14 REFERENCE_HITS_3 register (Address 0x37)

Table 54: REFERENCE_HITS_3 register

Addr: 0x37		REFERENCE_HITS_3		
Field	**Name**	**Rst**	**Type**	**Description**
7:0	*reference_hits[31:24]*	0	RO	Sum of the reference SPADs hits during the distance measurement; zero if no object is detected or distance algorithm is not used

7.3.15 OBJECT_HITS_0 register (Address 0x38)

Table 55: OBJECT_HITS_0 register

Addr: 0x38		OBJECT_HITS_0		
Field	**Name**	**Rst**	**Type**	**Description**
7:0	*object_hits[7:0]*	0	RO	Sum of the object SPADs hits during the distance measurement; zero if no object is detected or distance algorithm is not used

7.3.16 OBJECT_HITS_1 register (Address 0x39)

Table 56: OBJECT_HITS_1 register

Addr: 0x39		OBJECT_HITS_1		
Field	**Name**	**Rst**	**Type**	**Description**
7:0	*object_hits[15:8]*	0	RO	Sum of the object SPADs hits during the distance measurement; zero if no object is detected or distance algorithm is not used

7.3.17 OBJECT_HITS_2 register (Address 0x3A)

Table 57: OBJECT_HITS_2 register

Addr: 0x3A		OBJECT_HITS_2		
Field	**Name**	**Rst**	**Type**	**Description**
7:0	*object_hits[23:16]*	0	RO	Sum of the object SPADs hits during the distance measurement; zero if no object is detected or distance algorithm is not used

7.3.18 OBJECT_HITS_3 register (Address 0x3B)

Table 58: OBJECT_HITS_3 register

Addr: 0x3B		OBJECT_HITS_3		
Field	**Name**	**Rst**	**Type**	**Description**
7:0	*object_hits[31:24]*	0	RO	Sum of the object SPADs hits during the distance measurement; zero if no object is detected or distance algorithm is not used

7.3.19 XTALK_LSB register (Address 0x3C)

Table 59: XTALK_LSB register

Addr: 0x3C		XTALK_LSB		
Field	**Name**	**Rst**	**Type**	**Description**
7:0	*xtalk_lsb*	0	RO	Crosstalk peak value LSB byte; only valid with minimal ambient light and no target within 40 cm in field of view of the TMF8806.

7.3.20 XTALK_MSB register (Address 0x3D)

Table 60: XTALK_MSB register

Addr: 0x3D		XTALK_MSB		
Field	**Name**	**Rst**	**Type**	**Description**
7:0	*xtalk_msb*	0	RO	Crosstalk peak value MSB byte; only valid with minimal ambient light and no target within 40 cm in field of view of the TMF8806.

7.4 Calibration and algorithm state data exchange

These registers shall be pre-loaded by the host before command=0x02 is executed and *factoryCal*=1.

7.4.1 FACTORY_CALIB_0 to 13 registers (Address 0x20-0x2D)

Table 61: FACTORY_CALIB_0 to 13 registers

Addr: 0x20-0x2D	FACTORY_CALIB_0 to 13 registers – 14 Bytes, each register is 8 bits wide			
Addr	**Name**	**Rst**	**Type**	**Description**
0x20	*factory_calib_0*	0	RW	Factory calibration data Bits [3:0] are format revision; current revision is 0x2 Bits [7:4] are reserved.
0x21	*factory_calib_1*			Factory calibration data. Reserved.
0x22	*factory_calib_2*			Factory calibration data. Reserved.
0x23	*factory_calib_3*			
0x24	*factory_calib_4*			
0x25	*factory_calib_5*			
0x26	*factory_calib_6*			
0x27	*factory_calib_7*			
0x28	*factory_calib_8*			Factory calibration data.
0x29	*factory_calib_9*			
0x2A	*factory_calib_10*			
0x2B	*factory_calib_11*			
0x2C	*factory_calib_12*			
0x2D	*factory_calib_13*			

7.4.2 STATE_DATA_WR_0 to 10 registers (Address 0x2E-0x38)

If algorithm state data is sent to TMF8806 following registers shall be pre-loaded by the host before command=0x02 is executed and *algState*=1.

Table 62: STATE_DATA_WR_0 to 10 registers

Addr: 0x2E-0x38		STATE_DATA_WR registers		
Addr	**Name**	**Rst**	**Type**	**Description**
0x2E	*state_data_wr_0*	0	RW	Algorithm state data (11 Bytes) for writing from host to TMF8806 All registers are 8 bits wide and their content holds the current state of the algorithm. This is required especially for ultra low power operation, where the algorithm state is transferred from the host to TMF8806 right after startup of TMF8806 – see section 6.3.1.
0x2F	*state_data_wr_1*			
0x30	*state_data_wr_2*			
0x31	*state_data_wr_3*			
0x32	*state_data_wr_4*			
0x33	*state_data_wr_5*			
0x34	*state_data_wr_6*			
0x35	*state_data_wr_7*			
0x36	*state_data_wr_8*			
0x37	*state_data_wr_9*			
0x38	*state_data_wr_10*			

7.5 Raw histogram output

Following registers are only available if *register_contents*=0x80…0x93 (raw histogram output):

7.5.1 HISTOGRAM_START register (Address 0x20)

Table 63: HISTOGRAM_START register

Addr: 0x20		HISTOGRAM_START		
Field	**Name**	**Rst**	**Type**	**Description**
7:0	*hist_start*	0	RW	Quarter of histogram first byte

…all bytes until…

7.5.2 HISTOGRAM_END register (Address 0x9F)

Table 64: HISTOGRAM_END register

Addr: 0x9F		HISTOGRAM_END		
Field	**Name**	**Rst**	**Type**	**Description**
7:0	*hist_end*	0	RW	Quarter of histogram last byte

7.6 Serial number readout

Following registers are only available if *register_contents*=0x47 (Serial number readout):

7.6.1 SERIAL_NUMBER_0 register (Address 0x28)

Table 65: SERIAL_NUMBER_0 register

Addr: 0x28		SERIAL_NUMBER_0		
Field	**Name**	**Rst**	**Type**	**Description**
7:0	*serial_number_0*	0	RW	Serial number byte 0

7.6.2 SERIAL_NUMBER_1 register (Address 0x29)

Table 66: SERIAL_NUMBER_1 register

Addr: 0x29		SERIAL_NUMBER_1		
Field	**Name**	**Rst**	**Type**	**Description**
7:0	*serial_number_1*	0	RW	Serial number byte 1

7.6.3 IDENTIFICATION_NUMBER_0 register (Address 0x2A)

Table 67: IDENTIFICATION_NUMBER_0 register

Addr: 0x2A		IDENTIFICATION_NUMBER_0		
Field	**Name**	**Rst**	**Type**	**Description**
7:0	*identification_number_0*	0	RW	Identification number byte 0

7.6.4 IDENTIFICATION_NUMBER_1 register (Address 0x2B)

Table 68: IDENTIFICATION_NUMBER_1 register

Addr: 0x2B		IDENTIFICATION_NUMBER_1		
Field	**Name**	**Rst**	**Type**	**Description**
7:0	*identification_number_1*	0	RW	Identification number byte 1

The binary concatenated number of serial_number_0: serial_number_1: identification_number_0: identification_number_1 registers result in a unique number.

7.7 Interrupt suppression registers

Following registers are only available as result of command = 0x09.

7.7.1 PERSISTENCE register (Address 0x20)

Table 69: PERSISTENCE register

Addr: 0x20		PERSISTENCE		
Field	**Name**	**Rst**	**Type**	**Description**
7:0	*persistence*	0	RW	Persistence 8-bit value for interrupt suppression. **Value** / **Definition** 0: Any result (detect and no-detect) will trigger an interrupt 1-255: An interrupt will only be triggered if the detected distance is >= low_threshold and distance <= high_threshold and the detection happened at least <persistence> consecutive times

7.7.2 LOW_THRESHOLD_LSB register (Address 0x21)

Table 70: LOW_THRESHOLD_LSB register

Addr: 0x21		LOW_THRESHOLD_LSB		
Field	**Name**	**Rst**	**Type**	**Description**
7:0	*low_threshold_lsb*	0	RW	Interrupt suppression low_threshold LSB Byte – see PERSISTENCE register low_threshold [mm] = low_threshold_LSB + 256 * low_threshold_MSB

7.7.3 LOW_THRESHOLD_MSB register (Address 0x22)

Table 71: LOW_THRESHOLD_MSB register

Addr: 0x22		LOW_THRESHOLD_MSB		
Field	**Name**	**Rst**	**Type**	**Description**
7:0	*low_threshold_msb*	0	RW	Interrupt suppression low_threshold MSB Byte – see PERSISTENCE register low_threshold [mm] = low_threshold_LSB + 256 * low_threshold_MSB

7.7.4 HIGH_THRESHOLD_LSB register (Address 0x23)

Table 72: HIGH_THRESHOLD_LSB register

Addr: 0x23		HIGH_THRESHOLD_LSB		
Field	**Name**	**Rst**	**Type**	**Description**
7:0	*high_threshold_lsb*	0	RW	Interrupt suppression high_threshold LSB Byte – see PERSISTENCE register high_threshold [mm]= high_threshold_LSB + 256 * high_threshold_MSB

7.7.5 HIGH_THRESHOLD_MSB register (Address 0x24)

Table 73: HIGH_THRESHOLD_MSB register

Addr: 0x24		HIGH_THRESHOLD_MSB		
Field	**Name**	**Rst**	**Type**	**Description**
7:0	*high_threhold_msb*	0	RW	Interrupt suppression high_threshold MSB Byte – see PERSISTENCE register high_threshold [mm] = high_threshold_LSB + 256 * high_threshold_MSB

7.8 Bootloader

As the TMF8806 can be operated directly from the on-chip ROM, only minimal control of the bootloader is required. Starting the application is performed by setting *appReqid*=0xC0, see section 6.2.

Bootloader registers and functions are only available if *appid*=0x80 (Bootloader application id).

7.8.1 Bootloader registers

7.8.1.1 BL_CMD_STAT (Address 0x08)

Table 74: BL_CMD_STAT register

Addr: 0x08		BL_CMD_STAT		
Field	**Name**	**Rst**	**Type**	**Description**
7:0	*bl_cmd_stat*	0	RW	Write: Bootloader Command – see section Bootloader commands Read: Bootloader Status – anything else than 0x00 means an error

7.8.1.2 BL_SIZE (Address 0x09)

Table 75: BL_SIZE register

Addr: 0x09		BL_SIZE		
Field	**Name**	**Rst**	**Type**	**Description**
6:0	*bl_size*	0	RW	Data size in bytes

7.8.1.3 BL_DATA (Address 0x0A-0x89)

Table 76: BL_DATA register

Addr: 0x0A-0x89		BL_DATA		
Field	**Name**	**Rst**	**Type**	**Description**
7:0	*bl_data0 … bl_data127*	0	RW	Up to 128 data bytes for bootloader commands

7.8.1.4 BL_CSUM

Table 77: BL_CSUM register

Addr: After payload		BL_CSUM		
Field	**Name**	**Rst**	**Type**	**Description**
7:0	*bl_csum*	0	RW	Checksum for Sum (Command + Data Size + Data itself) XOR 0xFF

7.8.2 Bootloader commands

The following commands (bl_cmd_stat) are supported by the bootloader:

Table 78: Bootloader commands

Command	Value	Meaning
RAMREMAP_RESET	0x11	Remap RAM to Address 0 and Reset
DOWNLOAD_INIT	0x14	Initialize for RAM download from host to TMF8806
W_RAM	0x41	Write RAM Region (Plain = not encoded into e.g. Intel Hex Records)
ADDR_RAM	0x43	Set the read/write RAM pointer to a given address

RAMREMAP_RESET = execute program downloaded to RAM

This command remaps the RAM to address 0 and performs a System reset.

Command is performed immediately without any delay.

After this the application that is in RAM will be running. If there is no valid application, you will need to do a HW reset (toggle enable pin or power cycle).

Table 79: RAMREMAP_RESET

Address	Value	Meaning
BL_CMD_STAT	0x11	REMAP RAM to 0 and reset
BL_SIZE	0	No parameters
BL_CSUM	0xEE	

DOWNLOAD_INIT

This command is used to initialize the download.

Table 80: DOWNLOAD_INIT

Address	Value	Meaning
BL_CMD_STAT	0x14	Initialize TMF8806 for download from host to TMF8806 RAM
BL_SIZE	1	
BL_DATA0	0..0xFF	Seed
BL_CSUM	0..0xFF	

W_RAM

This command writes the given data to a defined RAM region. Note that the RAM pointer has first to be set by the command ADDR_RAM. After the command is successfully executed the RAM pointer will point to the first byte after the written region.

Table 81: W_RAM

Address	Value	Meaning
BL_CMD_STAT	0x41	Write to main RAM
BL_SIZE	0..0x80	Number of bytes to be written
BL_DATA0	0..0xFF	1st byte to be written
BL_DATA1	0..0xFF	2nd byte to be written

Address	Value	Meaning
…		
BL_DATA127	0..0xFF	128th byte to be written (only if size was 0x80).
BL_CSUM	0..0xFF	The CSUM comes immediately after the data.

ADDR_RAM

This command is to specify the RAM pointer location for the next R_RAM or W_RAM command.

Table 82: ADDR_RAM

Address	Value	Meaning
BL_CMD_STAT	0x43	Specify the address of the next RAM read or write
BL_SIZE	2	
BL_DATA0	0..0xFF	LSB of address in RAM
BL_DATA1	0..0xFF	MSB of address in RAM
BL_CSUM	0..0xFF	

8 Application information

8.1 Schematic

The TMF8806 needs only 3 small 0402 external capacitors for operation:

Figure 26: TMF8806 application schematic

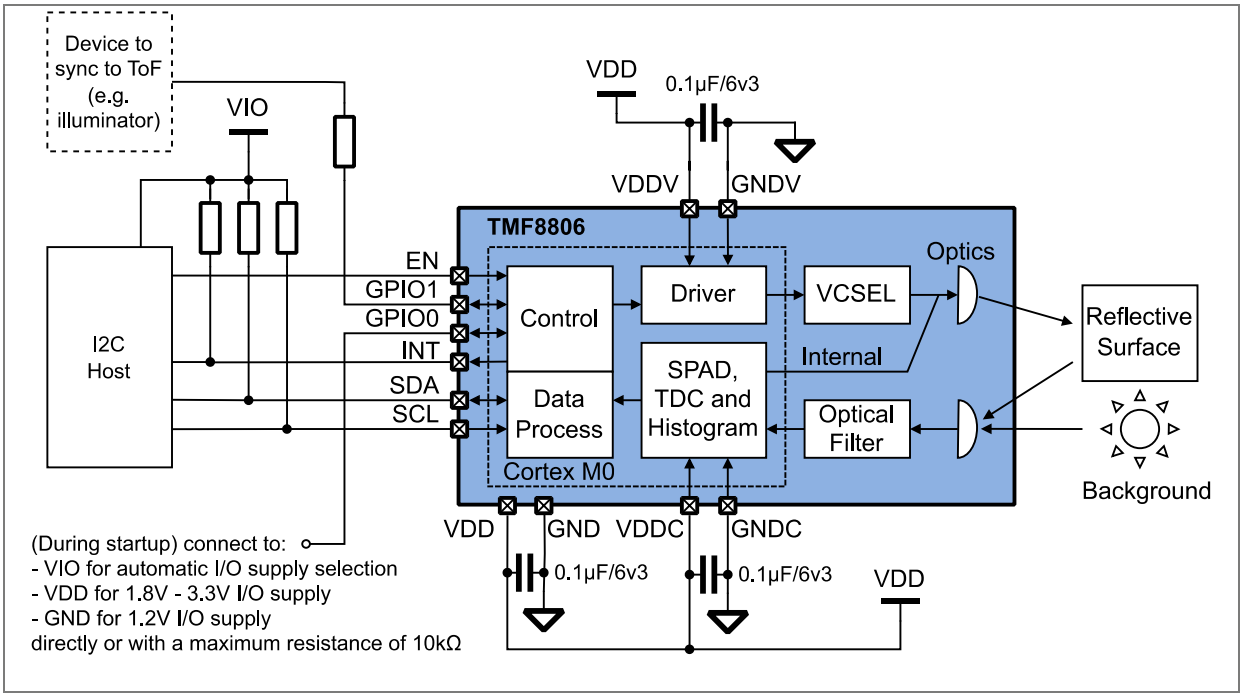

The SYNC signal connected to GPIO1 can be used to immediately interrupt the TMF8806 VCSEL operation if the high power illuminator is operating. It needs to be ensured that SYNC does not exceed the VDD supply of TMF8806 as otherwise an internal protection diode will start conducting. The VCSEL operation is controlled by setting cmd_data5 of command=0x02 according (see App0 registers). On SYNC assertion, the VCSEL is immediately switched off (typically after 10 µs), on SYNC de-assertion the VCSEL operation is resumed within >100 µs.

GPIO0 is used at startup for selection of the I/O supply, see section 6.7. After startup, it can be used as a general GPIO output signal.

The signals INT/SDA/SCL need an external pull-up resistor to the VIO supply (typically 1.8 V).

8.1.1 Operating several TMF8806 on a single I²C bus

Several TMF8806 devices can share a single I²C bus if there are dedicated enable (EN) connections to each of these devices.

Figure 27: Sharing a single I²C bus for operating several TMF8806's

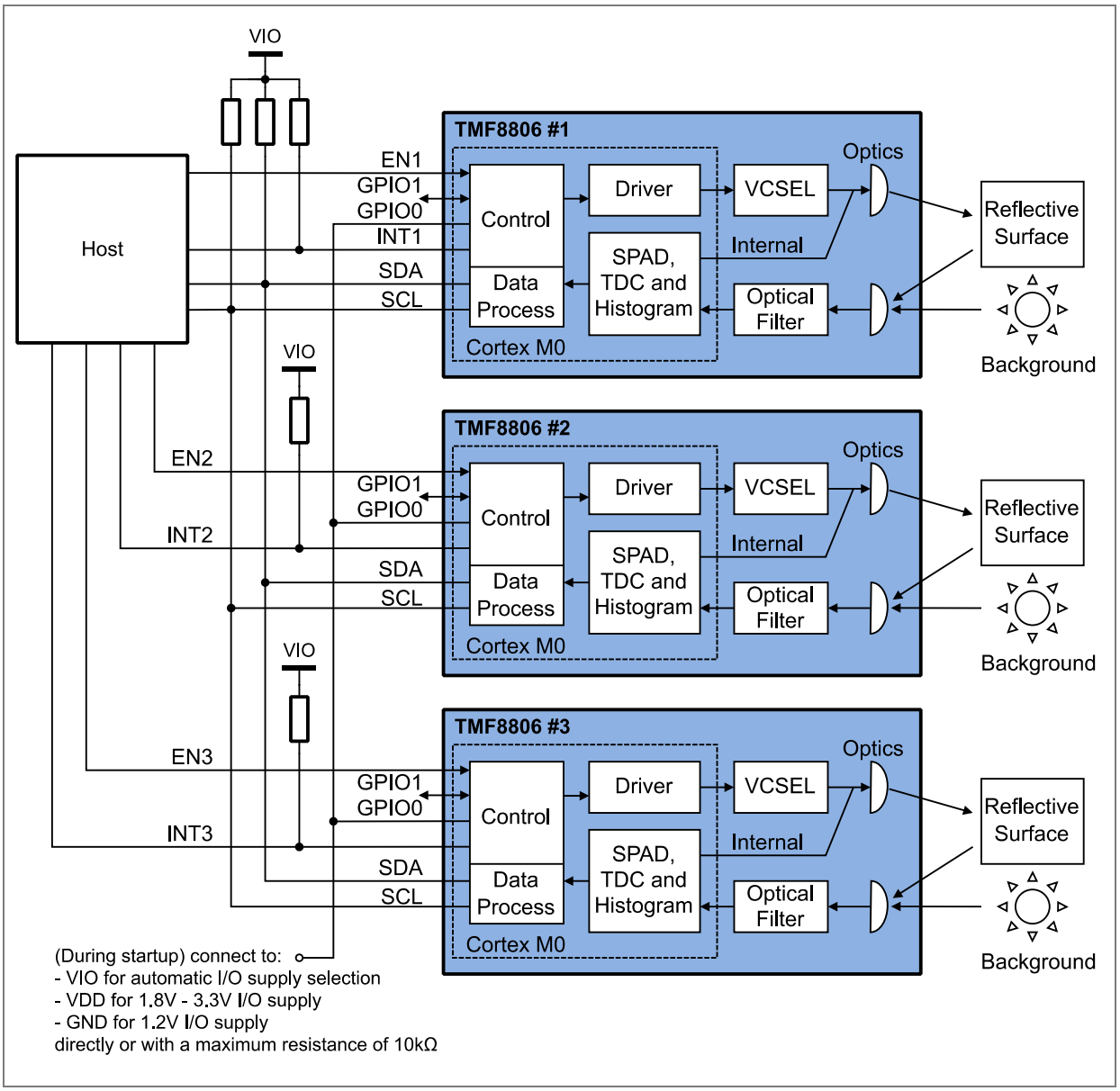

The procedure to initialize the devices to different I²C addresses is as follows:

1. Set EN1=0, EN2=0, EN3=0 (reset all devices)
2. Set EN1=1
3. Startup first TMF8806
4. Reprogram I²C address for first TMF8806 using command=0x49 where cmd_data0=0 and cmd_data1=I²C address for first TMF8806
5. Set EN2=1
6. Startup second TMF8806
7. Reprogram I²C address for second TMF8806 using command=0x49 where cmd_data0=0 and cmd_data1=I²C address for second TMF8806
8. Set EN3=1
9. Startup third TMF8806
10. Reprogram I²C address for third TMF8806 using command=0x49 where cmd_data0=0 and cmd_data1=I²C address for third TMF8806
11. If there are further devices, repeat the last three steps accordingly.

Information:

With setting of EN=0, the programmed I²C address returns to the default address. If the ultra low power mode (see section 6.3.1) is used together with the I²C address change, it needs to be done after every EN=0.

8.2 PCB layout

Figure 28: PCB layout recommendation

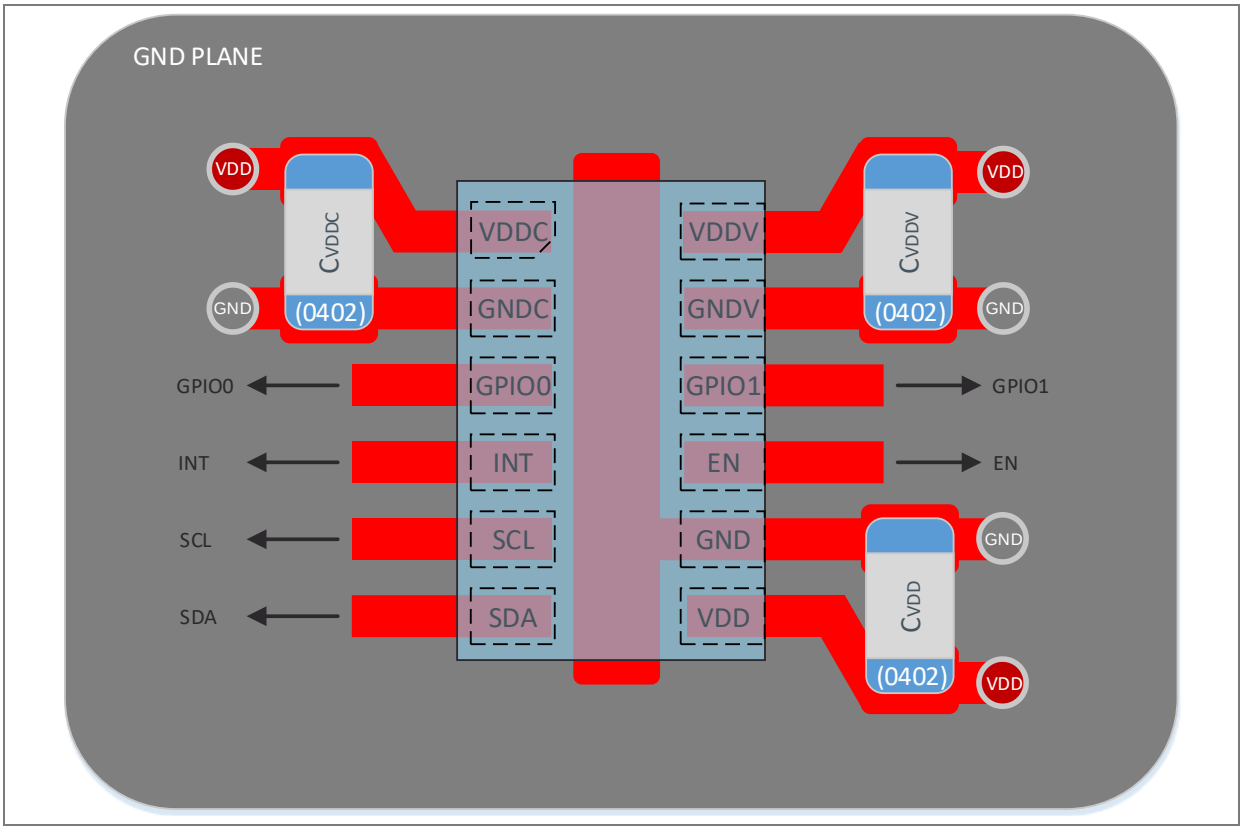

Use GRM155R70J104KA01 (0402 X7R 0.1 µF 6.3 V) or capacitors with same or better performance for CVDDC, CVDD and CVDDV.

8.3 PCB pad layout

Figure 29: PCB pad layout

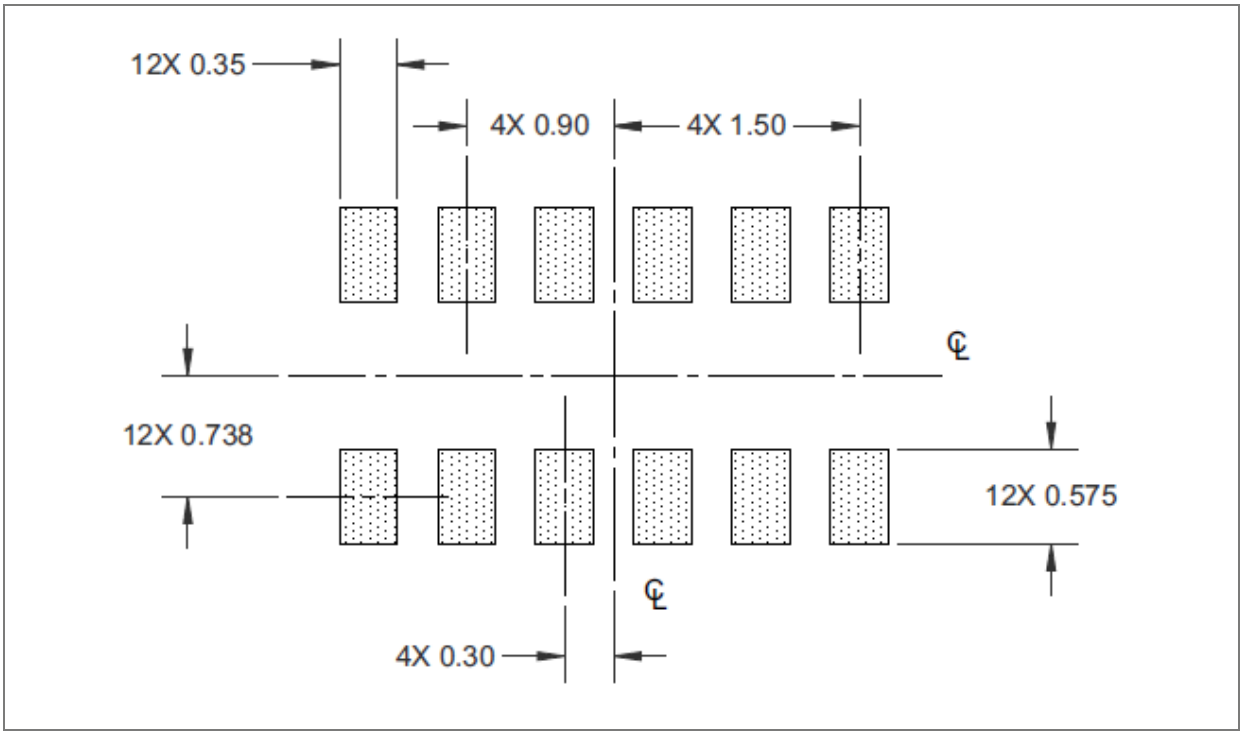

(1) All linear dimensions are in millimeters.
(2) Dimension tolerances are 0.05 mm unless otherwise noted.
(3) This drawing is subject to change without notice.

Use the PCB pad layout as a recommendation only. The actual pad layout shall be optimized for the customer production line.

8.4 Calibration

To meet the distance accuracy, each TMF8806 shall run a calibration procedure in a customer final test with the cover glass attached, see section 6.9.1. The crosstalk needs to meet the requirements defined by the ams OSRAM optical design guide (ODG) available on the ams-osram.com website:

- Optical design guide

The calibration data set shall be stored on the host and downloaded to the TMF8806 on every startup, see section 6.2.1. The TMF8806 uses this information for correction of the distance offsets, which varies from device to device.

8.5 Software drivers

ams OSRAM recommends using one of the available software drivers to operate the TMF8806. The drivers are available from the ams-osram.com website and github.com/ams-OSRAM:

- ams-osram.com/tmf8806
- https://github.com/orgs/ams-OSRAM/repositories?q=tmf8806

The following drivers are available:

Table 83: Software drivers

Type	File	Explanation
Arduino	TMF8806_Driver_Arduino_Source_v*.zip github.com/ams-OSRAM/tmf8806_driver_arduino	C source code driver intended to be easy portable to any other platform. This is the driver used for the TMF8806 shield EVM TMF8806_EVM_EB_SHIELD board if piggy-packed on an Arduino Uno (not included).
Python	TMF8806_Driver_Python_Source_v*.zip github.com/ams-OSRAM/tmf8806_driver_python	Python driver. This is the driver used for the TMF8806 shield EVM TMF8806_EVM_EB_SHIELD board if directly connected to the PC through its FTDI interface chip. The FTDI chip is included with the TMF8806 shield EVM board.
Linux	TMF8806_Driver_Linux_v*.zip and TMF8806_Driver_Linux_Source_v*.zip github.com/ams-OSRAM/tmf8806_driver_linux	Use for any Linux system (e.g. Android) where the driver is running on the application processor. This is the driver running on TMF8806 demo kit - TMF8806_EVM_DB_DEMO.

9 Package drawings & markings

Figure 30: OLGA12 package outline drawing

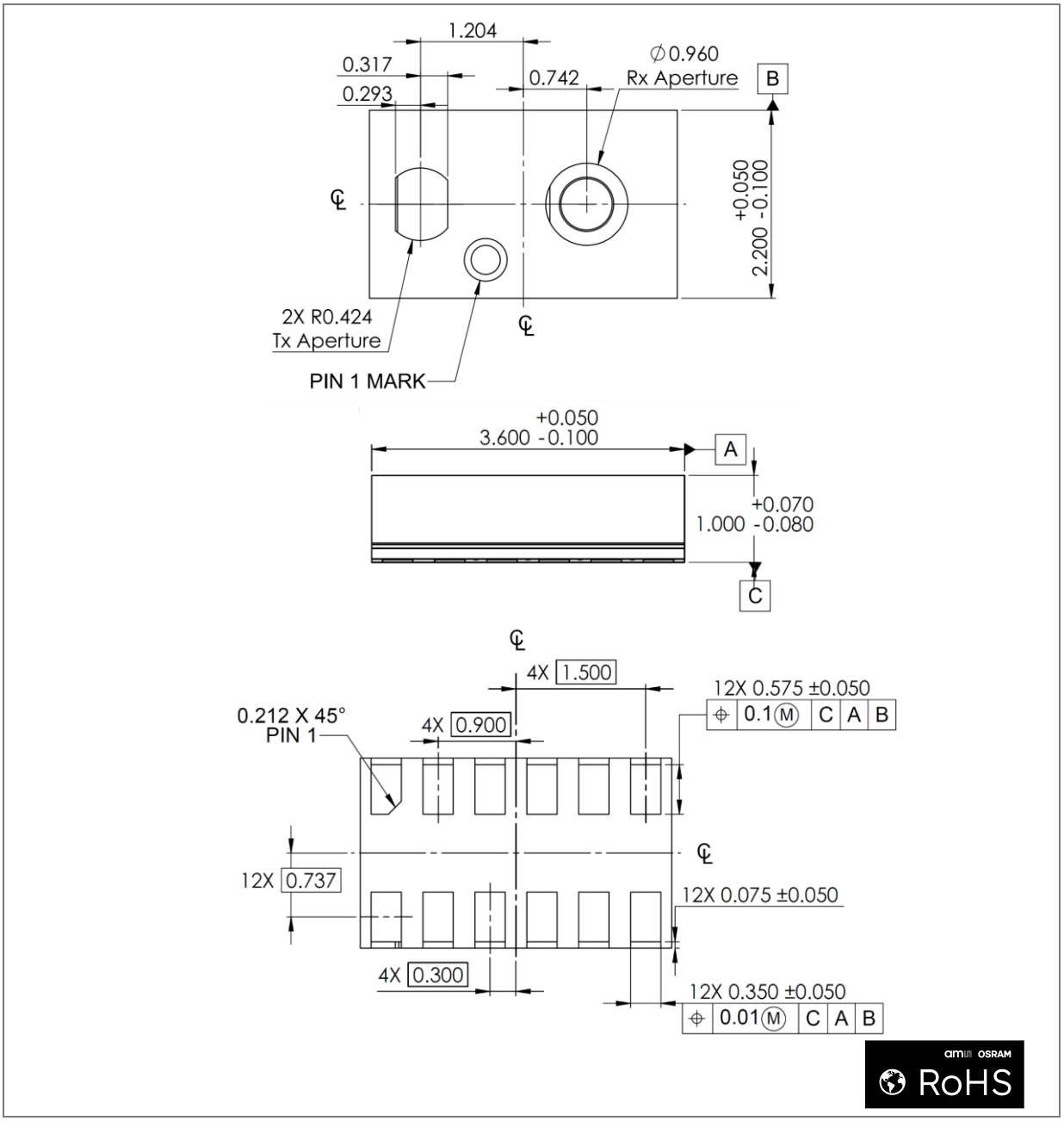

(1) All dimensions are in millimeters. Angles in degrees.
(2) Dimensioning and tolerancing conform to ASME Y14.5M-1994.
(3) This package contains no lead (Pb).
(4) This drawing is subject to change without notice.
(5) 8-digit tracecode only on bottom side of the package.

10 Tape & reel information

Figure 31: Tape and reel drawing

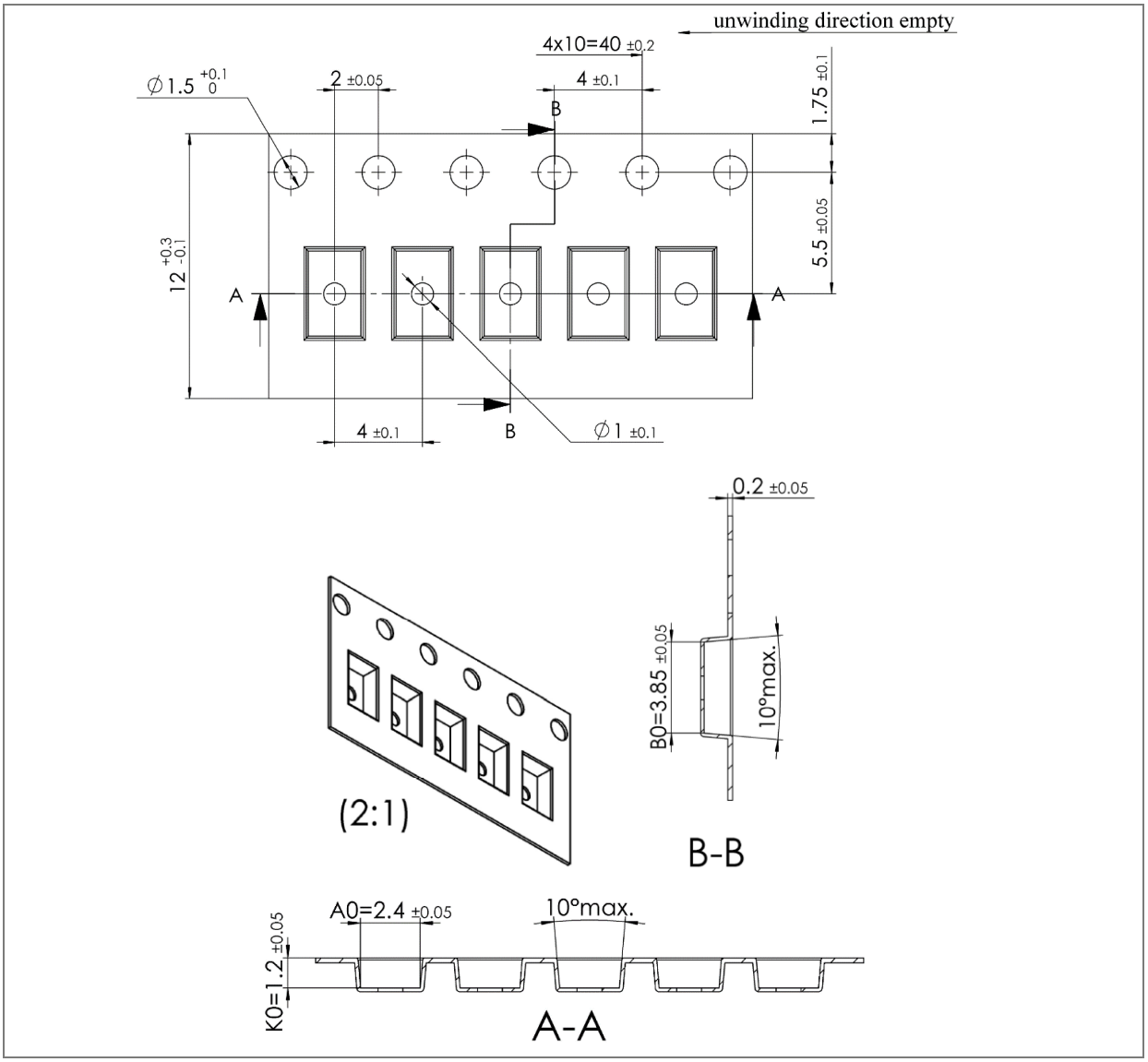

(1) All linear dimensions are in millimeters. Dimension tolerance is ± 0.10 mm unless otherwise noted.
(2) The dimensions on this drawing are for illustrative purposes only. The dimensions of an actual carrier may vary slightly.
(3) Symbols on drawing A0, B0, and K0 are defined in ANSI EIA Standard 481-B 2001.
(4) There are two reel sizes available (see section Ordering information).
i) 7″ reels: Each reel is 7 inch in diameter and contains 500 parts.
ii) 13″ reels: Each reel is 13 inch in diameter and contains 5000 parts.
(5) ams OSRAM packaging tape and reel conform to the requirements of EIA Standard 481-B.
(6) In accordance with EIA standard, device pin 1 is located next to sprocket holes in the tape.
(7) This drawing is subject to change without notice.

11 Soldering & storage information

11.1 Soldering information

The package has been tested and has demonstrated the ability to be reflow soldered to a PCB substrate. The process, equipment, and materials used in these tests are detailed below.

The solder reflow profile describes the expected maximum heat exposure of components during the solder reflow process of product on a PCB. Temperature is measured on top of component. The components should be limited to a maximum of three passes through this solder reflow profile.

Figure 32: Solder reflow profile graph

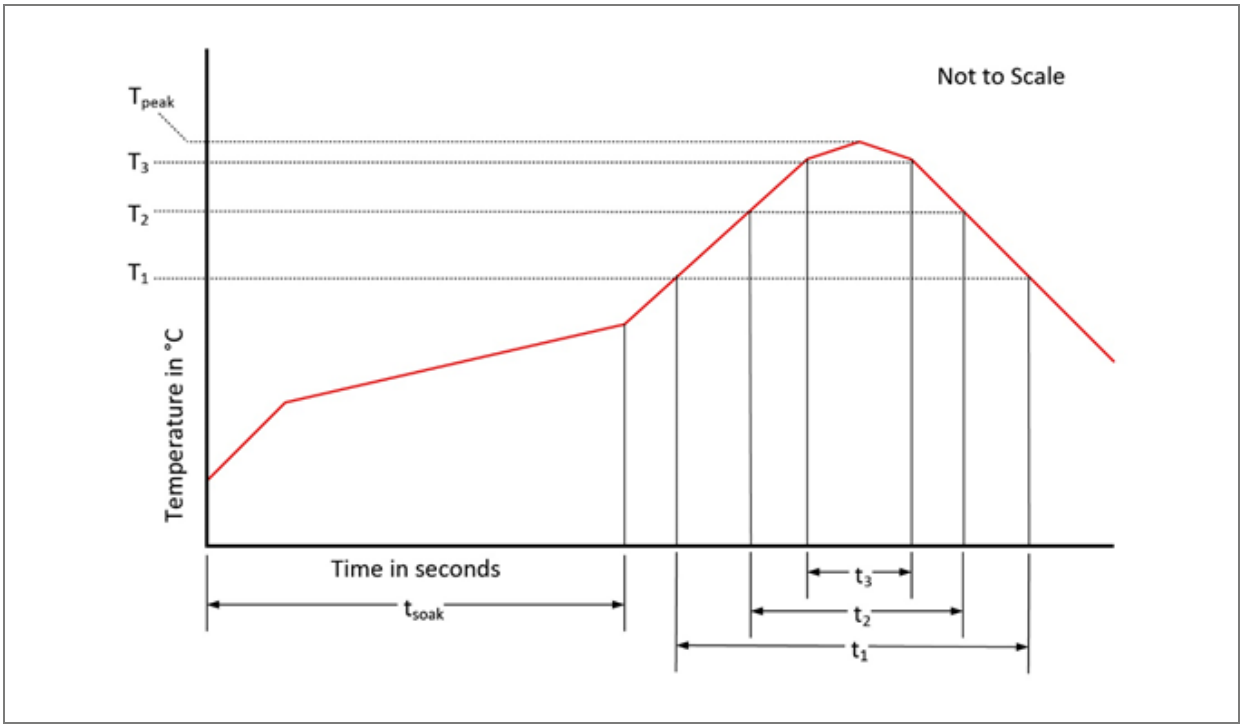

Table 84: Solder reflow profile

Parameter	Reference	Device
Average temperature gradient in preheating		2.5 °C/s
Soak time	t_{soak}	2 to 3 minutes
Time above 217 °C (T1)	t_1	Max 60 s
Time above 230 °C (T2)	t_2	Max 50 s
Time above T_{peak} – 10 °C (T3)	t_3	Max 10 s
Peak temperature in reflow	T_{peak}	260 °C
Temperature gradient in cooling		Max -5 °C/s

11.2 Storage information

Moisture sensitivity

Optical characteristics of the device can be adversely affected during the soldering process by the release and vaporization of moisture that has been previously absorbed into the package.

To ensure the package contains the smallest amount of absorbed moisture possible, each device is baked prior to being dry packed for shipping. Devices are dry packed in a sealed aluminized envelope called a moisture-barrier bag with silica gel to protect them from ambient moisture during shipping, handling, and storage before use.

Shelf life

The calculated shelf life of the device in an unopened moisture barrier bag is 24 months from the date code on the bag when stored under the following conditions:

- Shelf Life: 24 months
- Ambient Temperature: <40 °C
- Relative Humidity: <90 %

Rebaking of the devices will be required if the devices exceed the 24 months shelf life or the Humidity Indicator Card shows that the devices were exposed to conditions beyond the allowable moisture region.

Floor life

The module has been assigned a moisture sensitivity level of MSL 3. As a result, the floor life of devices removed from the moisture barrier bag is 168 hours from the time the bag was opened, provided that the devices are stored under the following conditions:

- Floor Life: 168 hours
- Ambient Temperature: <30°C
- Relative Humidity: <60 %

If the floor life or the temperature/humidity conditions have been exceeded, the devices must be rebaked prior to solder reflow or dry packing.

Rebaking instructions

When the shelf life or floor life limits have been exceeded, rebake at 50 °C for 12 hours.

12 Laser eye safety

The TMF8806 is designed to meet the Class 1 laser safety limits including single faults in compliance with IEC / EN 60825-1:2014 and EN 60825-1:2014/A11:2021. This applies to the stand-alone device and the included software supplied by ams OSRAM. In an end application system environment, the system may need to be tested to ensure it remains compliant. The system must not include any additional lens to concentrate the laser light or parameters set outside of the recommended operating conditions. Use outside of the recommended condition or any physical modification to the module during development could result in hazardous levels of radiation exposure.

Figure 33: Laser eye safety certificate



IEC 60825-1:2014 and
EN 60825-1:2014/A11:2021 and
EN 50689:2021

Complies with 21 CFR 1040.10 and 1040.11 except for conformance with IEC 60825-1 Ed. 3., as described in Laser Notice No. 56, dated May 8, 2019.

CAUTION:

Use of controls or adjustments or performance of procedures other than those specified herein may result in hazardous radiation exposure.

Example: Adding a converging lens on top of the TMF8806.

13 Revision information

Document status	Product status	Definition
Product Preview	Pre-development	Information in this datasheet is based on product ideas in the planning phase of development. All specifications are design goals without any warranty and are subject to change without notice
Preliminary Datasheet	Pre-production	Information in this datasheet is based on products in the design, validation or qualification phase of development. The performance and parameters shown in this document are preliminary without any warranty and are subject to change without notice
Datasheet	Production	Information in this datasheet is based on products in ramp-up to full production or full production which conform to specifications in accordance with the terms of ams-OSRAM AG standard warranty as given in the General Terms of Trade

Other definitions

Draft / Preliminary:
The draft / preliminary status of a document indicates that the content is still under internal review and subject to change without notice. ams-OSRAM AG does not give any warranties as to the accuracy or completeness of information included in a draft / preliminary version of a document and shall have no liability for the consequences of use of such information.

Short datasheet:
A short datasheet is intended for quick reference only, it is an extract from a full datasheet with the same product number(s) and title. For detailed and full information always see the relevant full datasheet. In case of any inconsistency or conflict with the short datasheet, the full datasheet shall prevail.

Changes from previous released version to current revision v4-00	Page
Added ordering code Q number	7
Reduced I_{POWER_DOWN} and I_{ACTIVE}	9
Added 10m mode current consumption	9
Clarified lighting conditions	14
Clarified calibration procedure settings	28
Exchanged xtalk_lsb <-> xtalk_msb (were flipped)	54
Updated package drawing to match TMF8805 drawings	71

- Page and figure numbers for the previous version may differ from page and figure numbers in the current revision.
- Correction of typographical errors is not explicitly mentioned.

14 Legal information

Copyright & disclaimer

Copyright ams-OSRAM AG, Tobelbader Strasse 30, 8141 Premstaetten, Austria-Europe. Trademarks Registered. All rights reserved. The material herein may not be reproduced, adapted, merged, translated, stored, or used without the prior written consent of the copyright owner.

Devices sold by ams-OSRAM AG are covered by the warranty and patent indemnification provisions appearing in its General Terms of Trade. ams-OSRAM AG makes no warranty, express, statutory, implied, or by description regarding the information set forth herein. ams-OSRAM AG reserves the right to change specifications and prices at any time and without notice. Therefore, prior to designing this product into a system, it is necessary to check with ams-OSRAM AG for current information. This product is intended for use in commercial applications. Applications requiring extended temperature range, unusual environmental requirements, or high reliability applications, such as military, medical life-support or life-sustaining equipment are specifically not recommended without additional processing by ams-OSRAM AG for each application. This product is provided by ams-OSRAM AG “AS IS” and any express or implied warranties, including, but not limited to the implied warranties of merchantability and fitness for a particular purpose are disclaimed.

ams-OSRAM AG shall not be liable to recipient or any third party for any damages, including but not limited to personal injury, property damage, loss of profits, loss of use, interruption of business or indirect, special, incidental or consequential damages, of any kind, in connection with or arising out of the furnishing, performance or use of the technical data herein. No obligation or liability to recipient or any third party shall arise or flow out of ams-OSRAM AG rendering of technical or other services.

Product and functional safety devices/applications or medical devices/applications:
ams-OSRAM AG components are not developed, constructed or tested for the application as safety relevant component or for the application in medical devices. ams-OSRAM AG products are not qualified at module and system level for such application.

In case buyer – or customer supplied by buyer – considers using ams-OSRAM AG components in product safety devices/applications or medical devices/applications, buyer and/or customer has to inform the local sales partner of ams-OSRAM AG immediately and ams-OSRAM AG and buyer and /or customer will analyze and coordinate the customer-specific request between ams-OSRAM AG and buyer and/or customer.

ams OSRAM RoHS and REACH compliance statements for semiconductor products

RoHS compliant: The term “RoHS compliant” means that semiconductor products from ams OSRAM fully comply with current RoHS directives, and China RoHS. Our semiconductor products do not contain any chemicals for all 6 substance categories plus additional 4 substance categories (per amendment EU2015/863) above the defined threshold limit in the Annex II.

REACH compliant: Semiconductor products from ams OSRAM are free of Substances of Very High Concern (SVHC) according Article 33 of the REACH Regulation 2006/1907/EC; please refer to the Candidate List of Substances of ECHA here.

Important information: The information provided in this statement represents ams OSRAM knowledge and belief as of the date that it is provided. ams OSRAM bases its knowledge and belief on information provided by third parties, and makes no representation or warranty as to the accuracy of such information. We are undertaking efforts to better integrate information from third parties. ams OSRAM has taken and will continue to take reasonable steps to provide representative and accurate information but may not have conducted destructive testing or chemical analysis on incoming materials and chemicals. ams OSRAM and its suppliers consider certain information to be proprietary, and thus CAS numbers and other limited information may not be available for release.

Headquarters
ams-OSRAM AG
Tobelbader Strasse 30
8141 Premstaetten
Austria, Europe
Tel: +43 (0) 3136 500 0

Please visit our website at ams-osram.com
For information about our products go to Products
For technical support use our Technical Support Form
For feedback about this document use Document Feedback
For sales offices and branches go to Sales Offices / Branches
For distributors and sales representatives go to Channel Partners

Compliance Statement to RoHS Directive (2011/65/EU including amendment (EU) 2015/863) for Semiconductor Products in brand ams and OSRAM

ams OSRAM declares that:

- the company has installed an internal management system which ensures compliance of our semiconductor products with the applicable legal requirements. This system includes products, parts and materials procured from suppliers,
- all ams and OSRAM branded semiconductor products conform to the substance requirements of EU Directive 2011/65/EU - RoHS (including amendment (EU) 2015/863), quantity limit of 0.1% by mass (1000 ppm) in homogeneous material for: Lead (Pb), Mercury (Hg), Hexavalent Chromium (Cr^{+6}), Polybrominated Biphenyls (PBB), Polybrominated Diphenyl Ethers (PBDE) Bis(2-Ethylhexyl) Phthalate (DEHP), Benzyl Butyl Phthalate (BBP), Dibutyl Phthalate (DBP), and Diisobutyl Phthalate (DIBP) and quantity limit of 0.01% by mass (100 ppm) of homogeneous material for Cadmium are not exceeded unless in an application exempted by Annex III of the Directive.
- products' full material declaration can be referred to for RoHS compliance status of a product.

We continue to monitor our semiconductor products and the supply chain for the requirements posed by this and other regulations, e.g.:

- Directive 2000/53/EC (End-of-life vehicles – ELV)
- Non-EU RoHS regulations similar to above Directive

For other inquiries, please visit our webpage (Product stewardship - Semiconductor | ams OSRAM (ams-osram.com)) or contact your respective sales representative for the material declarations of specific semiconductor products.

The information provided in this statement represents our knowledge and belief as of the date that it is provided. We base our knowledge and belief on information provided by third parties and make no representation or warranty as to the accuracy and shall have no liability for the consequences of use of such information. We have taken and continue to take reasonable steps to provide representative and accurate information but may not have conducted destructive testing or chemical analysis on incoming materials and chemicals. We and our suppliers consider certain information to be proprietary, and thus CAS numbers and other limited information may not be available for release.

ams-OSRAM AG
Tobelbader Strasse 30
8141 Premstaetten, Austria
T. +43 3136 500 249 048
ams-osram.com

Release Date: 2022-08-09

ams OSRAM Compliance Statement to REACh Regulation (EC) No. 1907/2006 for its Semiconductor Products

Entered into force on 1 June 2007, Regulation (EC) No 1907/2006 concerning the Registration, Evaluation, Authorization and Restriction of Chemicals (REACh) aims to improve the protection of human health and the environment from the risks posed by chemicals, while enhancing the competitiveness of the business industries.

The Candidate List of Substances has been updated on **4th February 2026** (253 substances of very high concern - SVHC). We, based on best available information provided by our suppliers, declare:

- None of the Candidate List substances is exceeding 0.1% (weight) in a semiconductor article
- Our semiconductor products do not contain substances as listed in REACh Annex XVII exceeding the relevant limits
- ams OSRAM semiconductor products are “articles”, not chemicals; Safety Data Sheets are not applicable

More information on the regulation and related directives to which our semiconductor products comply can be viewed here:

- REACh – SVHC candidate List (https://echa.europa.eu/candidate-list-table)
- REACh Annex XVII Substances (https://echa.europa.eu/substances-restricted-under-reach)

We continue to monitor our semiconductor products and the supply chain for the requirements posed by the regulations. For other inquiries, please visit our webpage (Product stewardship - semiconductor | ams OSRAM (ams-osram.com)) or contact your respective sales representative for the material declarations of specific semiconductor products.

The information provided in this statement represents our knowledge and belief as of the date that it is provided. We base our knowledge and belief on information provided by third parties and make no representation or warranty as to the accuracy and shall have no liability for the consequences of use of such information. We have taken and continue to take reasonable steps to provide representative and accurate information, but may not have conducted destructive testing or chemical analysis on incoming materials and chemicals. We and our suppliers consider certain information to be proprietary, and thus CAS numbers and other limited information may not be available for release.

ams-OSRAM AG
Tobelbader Strasse 30
8141 Premstaetten, Austria
ams-osram.com
© All rights reserved
Release Date: 12th of February 2026