


設計驗證
工程課
2026 -04- 09
發行
鈺鋒科技開發股份有限公司

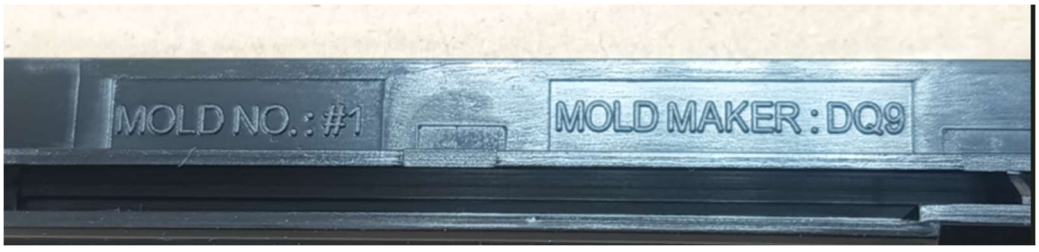
MOLD NO. : #1
MOLD MAKER : DQ9

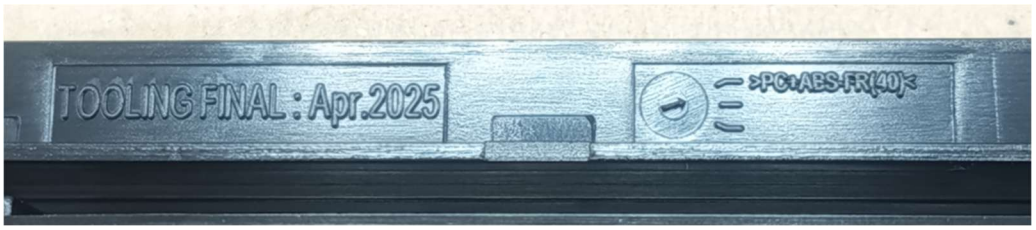
TOOLING FINAL : Apr.2025
>PC+ABS-FR(40)<


P/N:3J.6G7
Year
Month
Date
REV:
OUTER

蘇州佳世達 DQ9

承認書

設計驗證
工程課
2026 -04- 09
發行
鈺鐘科技開發股份有限公司

客戶 : DIVA
料號 : 2BAD6930039 (M3534)
品名 : FRONT BEZEL ASSY (QD2 21.5" BLACK)
日期 : 2026/04/09

QISDA No.:6K.6G702.001

REV.	DATE	DESCRIPTION	BY	APVD
0	2025/05/25	FIRST RELEASE	OWEN	

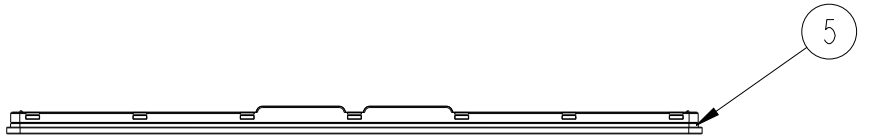

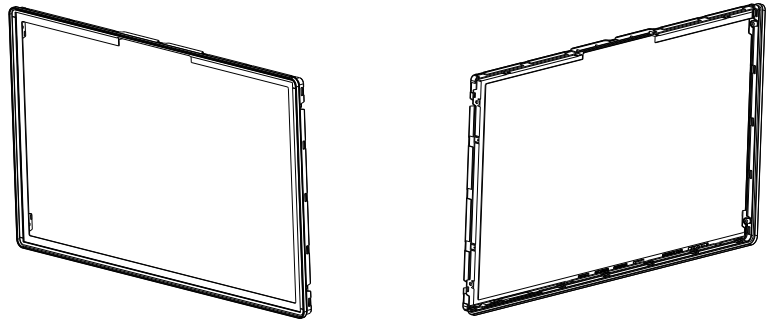

比例 3/10

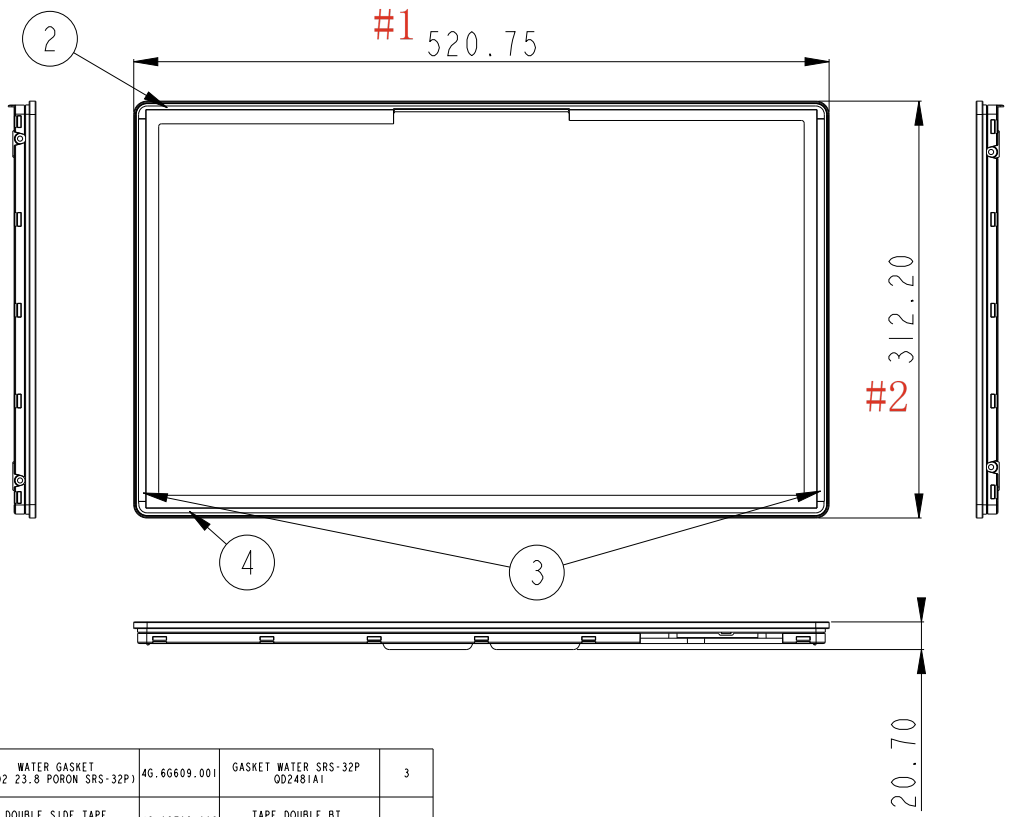

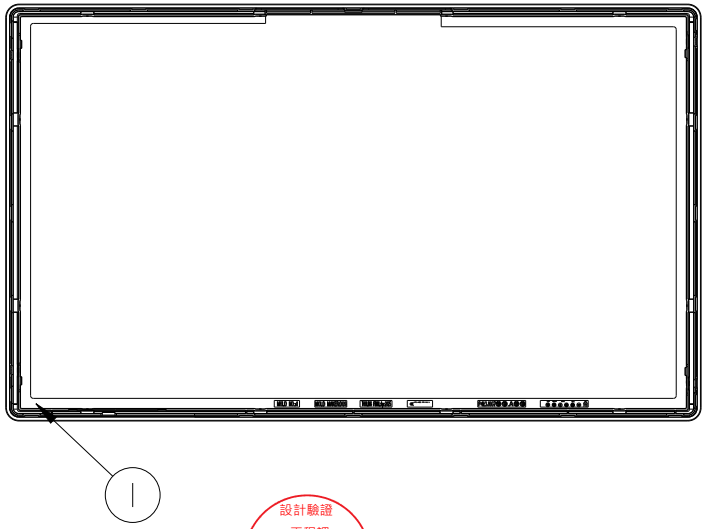

設計驗證
工程課
2026 -04- 09
發行

ITEM NO	DIVA PN	DIVA DESC	QISDA PN	QISDA DESC	QTY
5	3MD694TH080	WATER GASKET (QD2 23.8 PORON SRS-32P)	4G.6G609.001	GASKET WATER SRS-32P QD2181AI	3
4	3MD693TH030	DOUBLE SIDE TAPE (QD2 21.5 BT 3MGPH110)	4G.6G703.003	TAPE DOUBLE BT QD2181AI-P	1
3	3MD693TH020	DOUBLE SIDE TAPE (QD2 21.5 L/R 3M GPH110)	4G.6G702.002	TAPE DOUBLE L/R QD2181AI-P	2
2	3MD693TH010	DOUBLE SIDE TAPE (QD2 21.5 TOP 3M GPH110)	4G.6G701.003	TAPE DOUBLE TOP QD2181AI-P	1
1	3MD693PI010	BEZEL INNER (BLACK QD2 21.5")	3J.6G701.A11	BEZEL FRONT QD2181AI-P	1

RANGE OF DIMENSION	TOLERANCE CLASS DESIGNATION V		
	fine	medium	coarse
UP TO 3	±0.05	±0.1	±0.2
OVER 3~6	±0.05	±0.1	±0.3
OVER 6~30	±0.1	±0.2	±0.5
OVER 30~120	±0.15	±0.3	±0.8
OVER 120~400	±0.2	±0.5	±1.2
OVER 400~1000	±0.3	±0.8	±2.0
OVER 1000~2000	±0.5	±1.2	±3.0
OVER 2000~4000	-	±2.0	±8.0
ANGLE ±1° (±1.75/100)			

THIRD ANGLE PROJECTION

UNITS: mm | SCALE: 1/2 | SHEET: 1 OF 1 | MODEL NO.: QD11.21.5"

MATERIAL: | TREATMENT:

DSGD by Owen | May-25-25 | PART NAME: ASSY BEZEL FRONT QD2181AI-P

CHK by | | DIVA P/N: 2BAD6930039

APVD by Laslie | May-25-25 | Qisda NO.: 6K.6G702.001

APVD NO.: (M3534) | 3D FILE NAME: 0215.000.BEZEL.ASM.002.IP65

DIVA Laboratories ,Ltd.

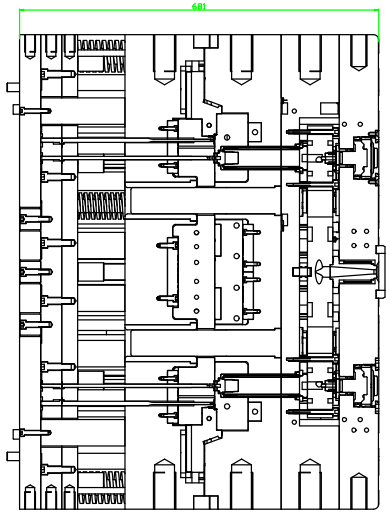

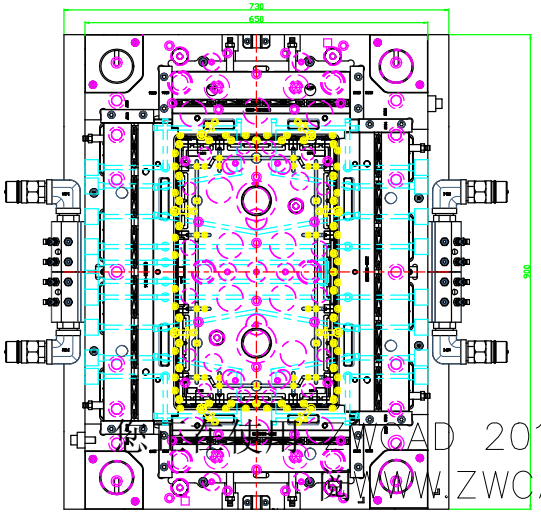

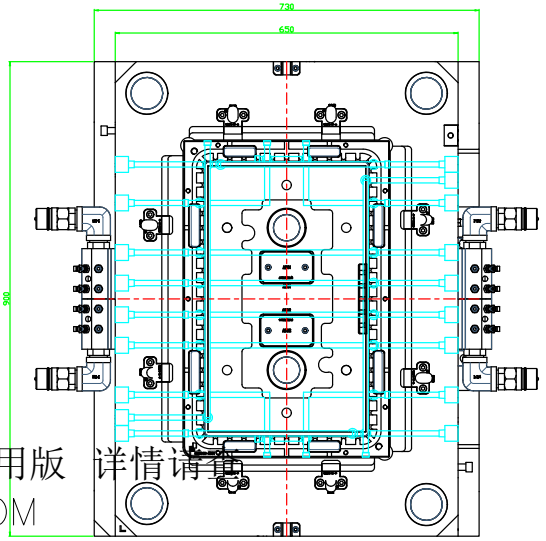

您正在使用ZWCAD 2011 试用版 详情请至
WWW.ZWCAD.COM

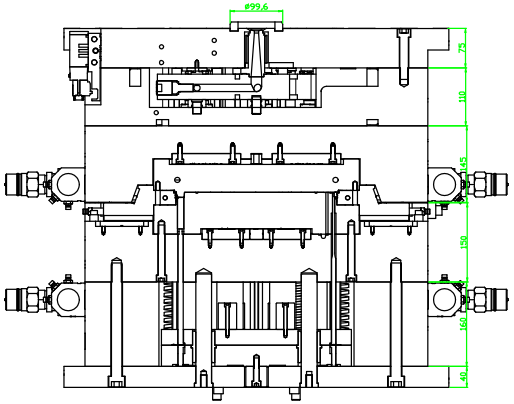

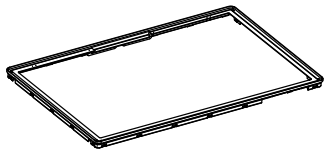

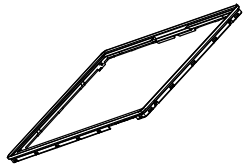

未注公差 0. ±0.2 .0 ±0.1 .00 ±0.01 .000 ±0.005	设计		3D		模号	QI250101	比例 1:1
	绘图		塑料	PC+ABS	图名	QD2181AI-P	分机
	校对		缩水率	3.8/1000	品名	FRONT-BEZEL	视角
页次 1/1 版别 A	承认		苏州佳世达				A4

Qisda

Dimension Approval Sheet

Model Name:	QD2181AL-P	**Sample Approval Sheet NO.:**	
Part Name:	FRONT BEZEL	**Material:**	PC+ABS Bayblend FR3010
Part Number:	3J.6G701.A11 **REV:** A0	**Color:**	BLACK
Vendor:	DQ9	**Date:**	2025.05.20

Inspection Gauge:

Coordinate Measuring Machine	(CMM)	Micro Scope	(M)	Radius Gauge	
Caliper	(C)	Height Gauge	(HG)	Block Gauge	
Micrometer	(M)	Projector	(P)	Visual	
Pin Gauge	(PG)	Thickness Gauge	(T)	Lever Type Dial Test	

Distribution

R&D	
QC	
Purchase	
Vendor	

Vendor Input | **Low** | **High**

If the Range is Greater Than 50% of the Total Tolerance the Cell will be RED

Item	Dim. Loc.	Gage Code	Cav. No	Spec.	Upper Tol	Lower Tol	Upper Limit	Lower Limit		Sample 1#	Sample 2#	Sample 3#	RD Check	Average	Status	Range	Disposition	Comments
1		C	1	520.75	0.3	0.3	520.85	520.45		520.650	520.650	520.640	520.630	520.6425	OK	0.008		
2		C	2	312.2	0.3	0.3	312.5	311.9		312.120	312.140	312.160	312.180	312.15	OK	0.022		
3		CMM	3	20.7	0.1	0.1	20.8	20.6		20.670	20.650	20.640	20.630	20.6475	OK	0.015		
4		CMM		483.4	0.3	0.3	483.7	483.1		483.264	483.292	483.318	483.520	483.3485	OK	0.101		
5		CMM		278.2	0.2	0.2	278.4	278		278.009	278.060	278.059	278.250	278.0945	OK	0.092		
6		CMM		280.7	0.2	0.2	280.9	280.5		280.520	280.563	280.544	280.680	280.57675	OK	0.062		
7		CMM		17	0.1	0.1	17.1	16.9		17.010	17.020	17.020	17.050	17.025	OK	0.015		
8		CMM		18.68	0.1	0.1	18.78	18.58		18.670	18.650	18.680	18.620	18.655	OK	0.023		
9		CMM		14.5	0.1	0.1	14.6	14.4		14.480	14.490	14.480	14.580	14.5075	OK	0.042		
10		CMM		17	0.1	0.1	17.1	16.9		17.030	17.030	17.020	17.060	17.035	OK	0.015		
11		CMM		2	0.05	0.05	2.05	1.95		2.030	2.040	2.050	2.020	2.035	OK	0.011		
12		CMM		8.74	0.1	0.1	8.84	8.64		8.704	8.716	8.724	8.760	8.726	OK	0.021		
13		CMM		0.5	0.05	0.05	0.55	0.45		0.550	0.550	0.550	0.550	0.55	OK	0.000		
14		CMM		1.2	0.05	0.05	1.25	1.15		1.240	1.236	1.246	1.227	1.23725	OK	0.007		
15		CMM		5	0.05	0.05	5.05	4.95		5.020	5.010	5.010	4.950	4.9975	OK	0.028		
16		CMM		2.4	0.05	0.05	2.45	2.35		2.388	2.386	2.365	2.390	2.38225	OK	0.010		
17		CMM		2.4	0.05	0.05	2.45	2.35		2.411	2.413	2.431	2.420	2.418775	OK	0.008		
18		CMM		2.4	0.05	0.05	2.45	2.35		2.385	2.378	2.374	2.430	2.39175	OK	0.022		
19		CMM		2.4	0.05	0.05	2.45	2.35		2.378	2.391	2.396	2.410	2.39375	OK	0.011		
20		CMM		2.4	0.05	0.05	2.45	2.35		2.402	2.406	2.408	2.380	2.399	OK	0.011		
21		CMM		2.4	0.05	0.05	2.45	2.35		2.352	2.356	2.354	2.360	2.3555	OK	0.003		
22		CMM		2.4	0.05	0.05	2.45	2.35		2.358	2.356	2.354	2.400	2.367	OK	0.019		
23		CMM		2.4	0.05	0.05	2.45	2.35		2.362	2.367	2.368	2.390	2.37175	OK	0.011		
24		CMM		2.4	0.05	0.05	2.45	2.35		2.412	2.416	2.422	2.440	2.4225	OK	0.011		
25		CMM		2.4	0.05	0.05	2.45	2.35		2.368	2.368	2.368	2.371	2.36875	OK	0.001		
26		CMM		2.4	0.05	0.05	2.45	2.35		2.357	2.354	2.356	2.355	2.3555	OK	0.001		
27		CMM		2.4	0.05	0.05	2.45	2.35		2.372	2.378	2.368	2.380	2.3745	OK	0.005		
28		CMM		2.4	0.05	0.05	2.45	2.35		2.430	2.423	2.415	2.420	2.422	OK	0.005		
29		CMM		2.4	0.05	0.05	2.45	2.35		2.392	2.376	2.388	2.405	2.39025	OK	0.010		
30		CMM		2.4	0.05	0.05	2.45	2.35		2.368	2.356	2.358	2.373	2.36375	OK	0.007		
31		CMM		2.4	0.05	0.05	2.45	2.35		2.378	2.372	2.370	2.388	2.377	OK	0.007		
32		CMM		2.4	0.05	0.05	2.45	2.35		2.350	2.360	2.366	2.364	2.36	OK	0.006		
33		CMM		2.4	0.05	0.05	2.45	2.35		2.356	2.356	2.367	2.384	2.36575	OK	0.011		
34		CMM		2.4	0.05	0.05	2.45	2.35		2.365	2.386	2.365	2.377	2.37325	OK	0.009		
35		CMM		2.4	0.05	0.05	2.45	2.35		2.356	2.356	2.367	2.389	2.367	OK	0.013		
36		CMM		2.4	0.05	0.05	2.45	2.35		2.376	2.382	2.386	2.412	2.389	OK	0.014		
37		CMM		2.4	0.05	0.05	2.45	2.35		2.358	2.367	2.362	2.397	2.371	OK	0.015		
38		CMM		10.42	0.1	0.1	10.52	10.32		10.380	10.365	10.373	10.440	10.3895	OK	0.030		
39		CMM		10.42	0.1	0.1	10.52	10.32		10.370	10.365	10.375	10.460	10.3925	OK	0.039		
40		CMM		10.42	0.1	0.1	10.52	10.32		10.370	10.360	10.380	10.450	10.39	OK	0.035		
41		CMM		10.42	0.1	0.1	10.52	10.32		10.350	10.364	10.372	10.410	10.374	OK	0.022		
42		CMM		10.42	0.1	0.1	10.52	10.32		10.330	10.360	10.340	10.370	10.35	OK	0.016		
43		CMM		10.42	0.1	0.1	10.52	10.32		10.380	10.345	10.380	10.390	10.37375	OK	0.017		
44		CMM		10.42	0.1	0.1	10.52	10.32		10.506	10.450	10.460	10.430	10.4615	OK	0.028		
45		CMM		10.42	0.1	0.1	10.52	10.32		10.433	10.426	10.437	10.480	10.444	OK	0.021		
46		CMM		10.42	0.1	0.1	10.52	10.32		10.460	10.480	10.456	10.380	10.444	OK	0.038		
47		CMM		10.42	0.1	0.1	10.52	10.32		10.369	10.368	10.374	10.420	10.38275	OK	0.022		
48		CMM		10.42	0.1	0.1	10.52	10.32		10.360	10.382	10.376	10.390	10.377	OK	0.011		
49		CMM		10.42	0.1	0.1	10.52	10.32		10.380	10.378	10.356	10.340	10.3635	OK	0.017		
50		CMM		10.42	0.1	0.1	10.52	10.32		10.510	10.452	10.436	10.480	10.4695	OK	0.028		
51		CMM		10.42	0.1	0.1	10.52	10.32		10.436	10.428	10.436	10.420	10.43	OK	0.007		
52		CMM		10.42	0.1	0.1	10.52	10.32		10.425	10.416	10.372	10.380	10.39825	OK	0.023		
53		CMM		10.42	0.1	0.1	10.52	10.32		10.380	10.362	10.384	10.370	10.374	OK	0.009		
54		CMM		10.42	0.1	0.1	10.52	10.32		10.460	10.416	10.423	10.430	10.43225	OK	0.017		
55		CMM		10.42	0.1	0.1	10.52	10.32		10.324	10.346	10.345	10.330	10.33625	OK	0.009		

Qisda

Dimension Approval Sheet

Model Name:	QD2181AL-P	**Sample Approval Sheet NO.:**	
Part Name:	FRONT BEZEL	**Material:**	PC+ABS Bayblend FR3010
Part Number:	3J.6G701.A11 **REV:** A0	**Color:**	BLACK
Vendor:	DQ9	**Date:**	2025.05.20

Inspection Gauge:

Coordinate Measuring Machine	(CMM)	Micro Scope	(M)	Radius Gauge	
Caliper	(C)	Height Gauge	(HG)	Block Gauge	
Micrometer	(M)	Projector	(P)	Visual	
Pin Gauge	(PG)	Thickness Gauge	(T)	Lever Type Dial Test	

Distribution

R&D	
QC	
Purchase	
Vendor	

Vendor Input | Low | High

If the Range is Greater Than 50% of the Total Tolerance the Cell will be RED

Item	Dim. Loc.	Gage Code	Cav. No	Spec.	Upper Tol	Lower Tol	Upper Limit	Lower Limit		Sample 1#	Sample 2#	Sample 3#	RD Check	Average	Status	Range	Disposition	Comments
56		CMM		10.42	0.1	0.1	10.52	10.32		10.430	10.426	10.435	10.440	10.43275	OK	0.005		
57		CMM		10.42	0.1	0.1	10.52	10.32		10.430	10.416	10.408	10.420	10.4185	OK	0.008		
58		CMM		10.42	0.1	0.1	10.52	10.32		10.432	10.413	10.423	10.430	10.4245	OK	0.007		
59		CMM		10.42	0.1	0.1	10.52	10.32		10.400	10.413	10.426	10.430	10.41725	OK	0.012		
60		CMM		10.42	0.1	0.1	10.52	10.32		10.369	10.365	10.373	10.380	10.37175	OK	0.006		
61		CMM		2.75	0.05	0.05	2.8	2.7		2.730	2.710	2.720	2.730	2.7225	OK	0.008		
62		CMM		2.75	0.05	0.05	2.8	2.7		2.720	2.700	2.730	2.740	2.7225	OK	0.015		
63		CMM		2.75	0.05	0.05	2.8	2.7		2.720	2.715	2.710	2.710	2.71375	OK	0.004		
64		CMM		2.75	0.05	0.05	2.8	2.7		2.730	2.710	2.710	2.720	2.7175	OK	0.008		
65		CMM		2.75	0.05	0.05	2.8	2.7		2.720	2.710	2.710	2.760	2.725	OK	0.021		
66		CMM		2.75	0.05	0.05	2.8	2.7		2.710	2.710	2.700	2.770	2.7225	OK	0.028		
67		CMM		2.75	0.05	0.05	2.8	2.7		2.700	2.710	2.701	2.710	2.70525	OK	0.005		
68		CMM		2.75	0.05	0.05	2.8	2.7		2.720	2.710	2.710	2.730	2.7175	OK	0.008		
69		CMM		2.75	0.05	0.05	2.8	2.7		2.720	2.710	2.700	2.740	2.7175	OK	0.015		
70		CMM		2.75	0.05	0.05	2.8	2.7		2.710	2.700	2.700	2.700	2.7025	OK	0.004		
71		CMM		2.75	0.05	0.05	2.8	2.7		2.710	2.720	2.730	2.780	2.735	OK	0.027		
72		CMM		2.75	0.05	0.05	2.8	2.7		2.720	2.730	2.710	2.750	2.7275	OK	0.015		
73		CMM		2.75	0.05	0.05	2.8	2.7		2.710	2.740	2.720	2.730	2.725	OK	0.011		
74		CMM		2.75	0.05	0.05	2.8	2.7		2.720	2.720	2.710	2.720	2.7175	OK	0.004		
75		CMM		2.75	0.05	0.05	2.8	2.7		2.710	2.720	2.710	2.740	2.72	OK	0.012		
76		CMM		2.75	0.05	0.05	2.8	2.7		2.710	2.710	2.720	2.730	2.7175	OK	0.008		
77		CMM		2.75	0.05	0.05	2.8	2.7		2.720	2.710	2.710	2.750	2.7225	OK	0.016		
78		CMM		2.75	0.05	0.05	2.8	2.7		2.720	2.720	2.710	2.740	2.7225	OK	0.011		
79		CMM		2.75	0.05	0.05	2.8	2.7		2.710	2.720	2.720	2.760	2.7275	OK	0.019		
80		CMM		2.75	0.05	0.05	2.8	2.7		2.720	2.720	2.710	2.730	2.72	OK	0.007		
81		CMM		2.75	0.05	0.05	2.8	2.7		2.720	2.710	2.710	2.750	2.7225	OK	0.016		
82		CMM		2.75	0.05	0.05	2.8	2.7		2.720	2.710	2.730	2.770	2.7325	OK	0.023		
84		CMM		7.27	0.1	0.1	7.37	7.17		7.230	7.236	7.240	7.250	7.239	OK	0.007		
85		CMM		5.99	0.05	0.05	6.04	5.94		5.966	5.956	5.952	6.010	5.97095	OK	0.023		
86		CMM		2.75	0.05	0.05	2.8	2.7		2.700	2.715	2.721	2.770	2.7265	OK	0.026		
87		CMM		1.2	0.05	0.05	1.25	1.15		1.250	1.230	1.230	1.240	1.2375	OK	0.008		
88		CMM		8.74	0.1	0.1	8.84	8.64		8.756	8.781	8.742	8.760	8.75975	OK	0.014		
89		CMM		0.5	0.05	0.05	0.55	0.45		0.483	0.480	0.513	0.530	0.5015	OK	0.021		

Initiator:Guofeng Zhang Reviewed by :Carlos Q Chen Approve by: DLA/Owen Chiang/2025/9/11

SA成型条件表

成型厂	DQ9	模具厂	VST0	机台类型	电动	螺杆直径	70	版本：	A
机种	QD2181AL-P	料号	3J.6G701.A11	品名	前框	机台吨位	550T	机台编号	C15
模号	QJ250101	原料型号	PC+ABS	原料颜色	BLACK	模具类型	热流道	成型日期	2025/7/22

成型资讯及参数

温 度 设 定

烘料温度	90℃
烘料时间	4Hrs

段数	射嘴	一段	二段	三段	四段	五段	六段	
温度(℃)	260	260	250	240	230			
模温(℃)	设定	A	B	C	D			
公模	55度							
母模	55度							
温控箱温度设定								

成品重量	134G	料头重量	60G
模穴数	1穴		

时 间 压 力 速 度 设 定

锁模压力	5000T

射 出	一段	二段	三段	四段	五段	六段
压 力	185	0.81				
速 度	45	55	65	35		
射出位置	80	75	65	42		

切换方式	位置				保压切换	38
保 压	一段	二段	三段	四段	射出时间	5.5
保压压力	20	80	90		冷却时间	18
保压时间	0.6	1		10	成型周期	55S
背压/射终	130/30.7		计量/松退		80/3.5	
是否全自动	□是 □否					

时序设定		1	2	3	4	5	6	7	8	9
	闭	全开								
	开	3.8s								

氮气设定		延时	1	2	3	4	5	6	7
	时间								
	压力								

水路图

公模 操作侧

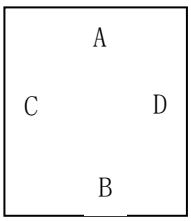

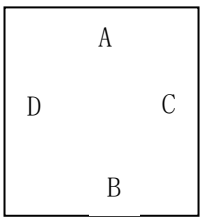

母模 操作侧

佳世达TE审核： 冯浩　　成型主管：梁明　　工程：余新永　　技术员： 王锦兵

UL Product iQ®

Model FR3010 HF +, FR3010 HF + RE

File Number: E41613

Yellow Card™

ALSO CERTIFIED TO IEC REQUIREMENTS

COMPANY

Covestro Deutschland AG [PC Resins]

Chempark
Gebaeude B207
Leverkusen, Nordrhein-Westfalen 51368 Germany

MODEL INFO

Bayblend: FR3010 HF +, FR3010 HF + RE

Polycarbonate/Acrylonitrile Butadiene Styrene (PC/ABS), furnished as pellets
+ – Material designations may be followed by a six digit numerical code denoting color.

FLAMMABILITY PROPERTIES	额定值	测试方法
Flammability		ANSI/UL 94
1.5 mm, Color: ALL	V-0	
2.2 mm, Color: ALL	5VB V-0	
3.0 mm, Color: ALL	5VA V-0	

ISO/IEC FLAMMABILITY PROPERTIES	额定值	测试方法
Flammability		IEC 60695-11-10
1.5 mm, Color: ALL	V-0	
2.2 mm, Color: ALL	V-0	
3.0 mm, Color: ALL	V-0	
Flammability		IEC 60695-11-20
2.2 mm, Color: ALL	5VB	
3.0 mm, Color: ALL	5VA	
Glow Wire Ignition Temperature (GWIT)		IEC 60695-2-13

1.0 mm	850 °C	
1.5 mm	850 °C	
2.2 mm	850 °C	
3.0 mm	850 °C	
Glow Wire Flammability Index (GWFI)		IEC 60695-2-12
1.0 mm	960 °C	
1.5 mm	960 °C	
2.2 mm	960 °C	
3.0 mm	960 °C	

ELECTRICAL PROPERTIES	额定值	测试方法
Hot-wire Ignition (HWI)		UL 746A
0.75 mm	PLC 4	
1.0 mm	PLC 4	
1.5 mm	PLC 3	
2.2 mm	PLC 3	
3.0 mm	PLC 3	
High Amp Arc Ignition (HAI)		UL 746A
0.75 mm	PLC 0	
1.0 mm	PLC 0	
1.5 mm	PLC 0	
2.2 mm	PLC 0	
3.0 mm	PLC 0	
Comparative Tracking Index (CTI)	PLC 0	UL 746A
High Voltage Arc Tracking Rate (HVTR)	PLC 3	
High Voltage, Low Current Arc Resistance	PLC 6	

THERMAL PROPERTIES	额定值	测试方法
Relative Thermal Index - Electrical Strength		UL 746B
1.0 mm	95 °C	
1.5 mm	95 °C	

2.2 mm	95 °C	
3.0 mm	95 °C	
Relative Thermal Index - Mechanical Impact		UL 746B
1.5 mm	85 °C	
2.2 mm	85 °C	
3.0 mm	85 °C	
Relative Thermal Index - Mechanical Strength		UL 746B
1.5 mm	85 °C	
2.2 mm	85 °C	
3.0 mm	90 °C	

Report Date: 1994-04-05
Revision Date: 2022-12-16

并不是所有出现在本数据库中的公司名称和产品都满足了UL 跟踪检验服务的要求。只有带有 UL 标志的产品，才应该被视为经过UL认证，并满足UL 跟踪检验服务的要求。注意查看产品上的标志。

UL 允许在线认证目录中所含材料的复制遵循以下条件：1.指南信息、装配、构造、设计、系统和/或认证（文件）必须在不篡改任何数据（或图纸）的情况下完整且无误导性地呈现。2.“经 UL 允许从在线认证目录转载”声明必须出现在所摘取材料的邻近位置。此外，转载材料必须包含以下格式的版权声明： "©2024 UL LLC."

BAYBLEND FR3010 HF

版本 1.18　　修订日期 05.07.2021　　打印日期 20.12.2023

第1部分: 化学品及企业标识

1.1 产品标识

BAYBLEND FR3010 HF
双酚A－聚碳酸酯/丙烯腈－丁二烯－苯乙烯共聚物，阻燃剂（低卤素含量，不含氯和溴），

物料号: 00919052

1.2 物质或混合物的推荐用途和限制用途

用途:
模制塑料产品的生产

1.3 安全技术说明书制作者的详细信息

科思创聚合物（中国）有限公司
科思创（上海）投资有限公司
中国上海浦东新区平家桥路36号晶耀商务广场5号楼25层
邮政编码: 200126

电话: (86) 21-8020-7777
传真: (86) 21-8020-8989
Email: productsafetyapac@covestro.com

1.4 应急电话

应急咨询专线电话: 如遇紧急情况，请拨 (86)-532-83889090
消防应急电话号码: (86)119

第2部分: 危险性概述

2.0 紧急情况概述

根据GHS分类不属于危害化学品。

2.1 物质或混合物的分类

GHS危险性类别:

根据GHS不属于危害化学品。

2.2 标签要素

GHS-象形图
根据GHS不属于危害化学品。

2.3 其他危险

无适用资料。

第3部分: 成分/组成信息

产品类型: 混合物

3.2 混合物

双酚A－聚碳酸酯/丙烯腈－丁二烯－苯乙烯共聚物，阻燃剂（低卤素含量，不含氯和溴），

根据GHS规定,不含有危险组分

第4部分: 急救措施

4.1 急救措施

若接触皮肤: 接触热熔物： 立即用大量水冷却。 既不能强制也不能使用溶剂除去粘在皮肤上的产品结皮。 为治疗可能引起的皮肤烫伤及对皮肤的适当护理，应立即就医。

室温下操作该产品参考以下信息。 皮肤接触时，立即用大量的水和肥皂彻底冲洗污染部位。

4.2 最重要的症状和效果，包括急性和迟发性

医疗信息: 无适用资料。

4.3 需要立即引起医疗照顾及特殊处理的指示

治疗措施： 无适用资料。

第5部分: 消防措施

5.1 灭火介质

合适的灭火剂: 水喷射,灭火粉末,二氧化碳(CO2),泡沫,化学干粉

5.2 物质或混合物的特殊危害

燃烧时释放一氧化碳、二氧化碳、氮氧化物和痕量的氰化氢。 在着火和/或爆炸情况下,不要吸进烟尘。

5.3 消防人员注意事项:

消防人员必须佩戴自供气式呼吸器。

禁止污染的灭火用水流入土壤，地下水或地表水中。

第6部分: 泄露应急处理

6.1 个人预防措施、防护设备和应急程序

颗粒－小心滑倒!

6.2 环境保护措施

禁止倒入地表水或生活污水系统。

6.3 污染物收集和清除的方法

使用机械操作设备。 防止形成粉尘。

6.4 参考其他章节

其它废弃措施见第13部分。

第7部分: 操作处置与储存

7.1 安全操作的预防措施

在建议的处理条件下，会放出少量的单体剩余物和溶剂残余物。 应提供良好的通风和/或局部排气设施，（有害物浓度）不应超过第8部分建议的工作场所接触限值。

粉尘必须通过有效排风除去。

远离食物，饮料和烟草。 休息前和工作后要洗手，并涂护肤药膏。 更换被污染的衣物。

7.2 安全储存条件，包括不相容物

对储存条件无特殊要求。

7.3 特定最终用途

无适用资料。

第8部分: 接触控制/个体防护

8.1 控制参数

加工该产品时，尤其是在高温处理过程中要遵守以下物质的有关法规。 基于经验要在产生蒸气的区域保证有效新鲜空气的供给和提供足够的通风换气设施，以确保遵守以下所提供的极限值。

物质		依据	类型	数值	阈值	备注
丙烯腈		CN OEL				可能经由皮肤吸收
丙烯腈		CN OEL	TWA	1 mg/m3		
丙烯腈		CN OEL	STEL	2 mg/m3		
苯乙烯		CN OEL	TWA	50 mg/m3		
苯乙烯		CN OEL	STEL	100 mg/m3		
苯乙烯		CN OEL				可能经由皮肤吸收
1,3-丁二烯		CN OEL	TWA	5 mg/m3		
乙苯		CN OEL	TWA	100 mg/m3		
乙苯		CN OEL	STEL	150 mg/m3		
苯酚		CN OEL				可能经由皮肤吸收
苯酚		CN OEL	TWA	10 mg/m3		
氯苯		CN OEL	TWA	50 mg/m3		
粉尘的一般限值		CN OEL	TWA	8 mg/m3		总粉尘
粉尘的一般限值		CN OEL	STEL	10 mg/m3		总粉尘

8.2 暴露控制

呼吸系统防护
产生粉尘时，使用符合EN 143规定的带P1型颗粒过滤器的呼吸防护设备。

手防护
防护手套的合适材料；EN 374:
聚氯乙烯 - PVC (>= 0.5 mm)
污染和/或损坏的手套必须更换。

眼睛防护
戴防护眼镜/防护面罩。

皮肤和身体防护
穿着适当的防护服。

第9部分：理化特性

9.1 基本理化信息

外观:	颗粒的	
颜色:	根据染色而异	
气味:	无味	
嗅觉阈值:	无数据	
pH值:	不适用	
软化点:	100 - 200 ° C	
闪点:	无数据	
蒸发速率:	无数据	
可燃性:	无数据	
燃烧值:	无数据	
较高/较低可燃性或爆炸极限:	不适用	
蒸气压:	不适用	
蒸气密度:	无数据	
密度:	约 1.1 - 1.2 g/cm³	德国工业标准 (DIN)53479
堆密度:	600 - 700 kg/m³	
水溶性:	几乎不溶	
表面张力:	无数据	
辛醇/水分配系数的对数值:	无数据	
自燃温度:	> 390 ° C	
引燃温度:	> 390 ° C	
分解温度:	>= 380 ° C	
燃烧热:	无数据	
动力粘度:	不适用	
爆炸特性:	无数据	
粉尘爆炸级别:	无数据	
氧化特性:	无数据	

9.2 其它信息

所示值不一定要与产品规格相符。有关规格数据，请参考“产品信息表”或“技术信息表”。

第10部分：稳定性和反应活性

10.1 反应性

本信息不可用。

10.2 化学稳定性

由于不恰当的处理导致的过热和燃烧时产生的烟雾可能会对健康产生危害。

10.3 可能的危害反应

若过热，空气中热熔物可能发生热分解（温度升高，产生烟或雾）。

10.4 避免接触的条件

本信息不可用。

10.5 不相容材料

本信息不可用。

10.6 危险分解产物

因闷烧和不完全燃烧放出主要含有CO和CO2的毒性烟雾。

在建议的处理条件下会放出少量的空气污染物。

加工该产品时，尤其是在高温处理过程中要遵守以下物质的有关法规。

丙烯腈
GHS危险性类别: 易燃液体 2 H225 致癌性 1B H350 急性毒性 3 吸入性 H331 急性毒性 3 经皮 H311 急性毒性 3 经口 H301 特异性靶器官系统毒性（一次接触）3 H335 皮肤刺激 2 H315 眼损伤 1 H318 皮肤过敏 1 H317 慢性水生毒性 2 H411 生殖毒性 2 H361d

苯乙烯
GHS危险性类别: 易燃液体 3 H226 急性毒性 4 吸入性 H332 皮肤刺激 2 H315 眼刺激 2 H319 生殖毒性 2 H361d 特异性靶器官系统毒性（一次接触）3 H335 特异性靶器官有毒（反复接触）1 吸入性 H372 吸入危险 1 H304 慢性水生毒性 3 H412

1,3-丁二烯
GHS危险性类别: 易燃气体 1 H220 致癌性 1A H350 压力下气体 致突变性 1B H340

4-乙烯基环己烯
GHS危险性类别: 致癌性 2 H351 易燃液体 2 H225 皮肤刺激 2 H315 吸入危险 1 H304 生殖毒性 2 H361 慢性水生毒性 3 H412

乙苯
GHS危险性类别: 易燃液体 2 H225 急性毒性 4 吸入性 H332 特异性靶器官有毒（反复接触）2 吸入性 H373 吸入危险 1 H304 慢性水生毒性 3 H412

苯酚
GHS危险性类别: 急性毒性 3 经口 H301 急性毒性 3 吸入性 H331 急性毒性 3 经皮 H311 皮肤腐蚀 1B H314 眼损伤 1 H318 致突变性 2 H341 特异性靶器官有毒（反复接触）2 H373 慢性水生毒性 2 H411

4-叔丁基苯酚
GHS危险性类别: 皮肤刺激 2 H315 眼损伤 1 H318 生殖毒性 2 H361f 慢性水生毒性 1 H410

氯苯
GHS危险性类别: 易燃液体 3 H226 急性毒性 4 吸入性 H332 皮肤刺激 2 H315 慢性水生毒性 2 H411

2,2-双-(4-羟苯基)-丙烷（双酚A)
GHS危险性类别: 眼损伤 1 H318 皮肤过敏 1 H317 生殖毒性 2 H361f 特异性靶器官系统毒性（一次接触）3 吸入性 H335 慢性水生毒性 2 H411

磷酸三苯酯
GHS危险性类别: 急性水生毒性 1 H400 慢性水生毒性 2 H411

第11部分：毒理学资料

该产品无可用的毒理学研究。

11.1 毒理学效应

急性毒性，经口
无数据资料

急性毒性，经皮
无数据资料

急性毒性，吸入
无数据资料

原发性皮肤刺激
无数据资料

原发性粘膜刺激
无数据资料

致敏性
无数据资料

亚急性，亚慢性和延迟毒性
无数据资料

致癌性
无数据资料

生殖毒性/生育力
无数据资料

生殖毒性/发育毒性/致畸性
无数据资料

体外遗传毒性
无数据资料

体内基因毒性
无数据资料

STOT 评估 - 一次性接触
无数据资料

STOT 评估 - 重复性接触
无数据资料

吸入危害
无数据资料

附加信息
根据我们的经验和产品信息，该产品在正确操作时无有害影响。

第12部分：生态学资料

该产品无可用的生态毒理学研究。

禁止排入下水道，废水或土壤中。

12.1 毒性

无数据资料

12.2 持久性和降解性

无数据资料

12.3 生物蓄积性

无数据资料

12.4 土壤中的迁移

无数据资料

12.5 PBT 和 vPvB 评估结果

无数据资料

12.6 其它不利的影响

本产品几乎不溶于水。 根据它的密度和水中的不溶性，预料该产品在正确使用时无生态问题。 该产品不易生物降解。

第13部分: 废弃注意事项

必需遵守适用的国际、国家和当地法规进行废弃。

在欧盟领域内废弃，应根据欧洲废弃物分类（EWC）的适当法规。

13.1 废弃物处理方法

尽可能将容器倒空（例如经倾倒，刮擦或排干直至“滴干”）， 可根据化学工业现存的回收方案送往适当的收集点处理。 容器应按照国家法令和环境相关法规进行回收。

本产品适合回收再利用。经过适当处理后，可被再熔融，再加工成新的模制产品。 唯有依据材料本身的类型有选择的回收并仔细分选，才可以进行回收。

不能将废弃物通过废水排放。

第14部分: 运输信息

陆运

14.1 联合国编号	:	非危险货物
14.2 联合国运输名称	:	非危险货物
14.3 运输危险级别	:	非危险货物
14.4 包装类别	:	非危险货物
14.5 环境危险	:	非危险货物

IATA

14.1 联合国编号	:	非危险货物
14.2 联合国运输名称	:	非危险货物
14.3 运输危险级别	:	非危险货物
14.4 包装类别	:	非危险货物
14.5 环境危险	:	非危险货物

IMDG

14.1 联合国编号	:	非危险货物
14.2 联合国运输名称	:	非危险货物
14.3 运输危险级别	:	非危险货物
14.4 包装类别	:	非危险货物
14.5 海洋污染物（是/否）	:	非危险货物

14.6 特殊防范措施

参见第 6 - 8 节

附加信息 : 非危险 货物。 保持干燥。

14.7 按《MARPOL73/78公约》附则II和IBC规则

不适用.

第15部分: 法规信息

15.1 物质或混合物的相关安全、健康和环保法律法规

职业病防治法: 参考第8章节
危险化学品安全使用许可证实施办法: 请按规定遵守
高毒物品目录: 不适用
重点监管的危险化学品名录: 不适用
中国严格限制进出口的有毒化学品目录: 不适用
危险化学品目录（列入/满足70%原则）: 不适用
危险化学品重大危险源辨识（GB 18218）: 不适用
中国现有化学物质名录: 已列入或符合新化学物质环境管理办法
剧毒化学品: 产品不属于剧毒化学品
易制爆危险化学品名录（2017年版）: 产品不属于易制爆危险化学品
易制毒化学品进出口管理规定: 产品不适用《易制毒化学品进出口管理规定》

其它的规定
符合下列法规要求:
危险化学品安全管理条例 国务院令第591号
GB/T 16483 化学品安全技术说明书 内容和项目顺序
GB 13690 化学品分类和危险性公示 通则
GB 30000.2-29 化学品分类和标签规范
GB 15258 化学品安全标签编写规定

第16部分: 其他信息

第 2、3 和 10 节中提及的 CLP 分类 (1272/2008/CE) 的危险性声明的全文。

H220	极易燃烧的气体
H225	高度易燃液体和蒸气。
H226	易燃液体和蒸气。
H301	吞咽会中毒。
H304	吞咽及进入呼吸道可能致命。
H311	皮肤接触会中毒。
H314	造成严重皮肤灼伤和眼损伤。
H315	造成皮肤刺激。
H317	可能造成皮肤过敏反应。
H318	造成严重眼损伤。
H319	造成严重眼刺激。
H331	吸入会中毒。
H332	吸入有害。
H335	可能造成呼吸道刺激。
H340	可能造成遗传性缺陷。
H341	怀疑可造成遗传性缺陷。
H350	可能致癌。
H351	怀疑致癌。
H361	怀疑对生育能力或胎儿造成伤害。
H361d	怀疑伤害胎儿。
H361f	怀疑对生育能力造成伤害。
H372	长期吸入或反复接触会对器官造成损害。
H373	长期或重复吸入，可能对器官造成损害。
H400	对水生生物毒性极大。
H410	对水生生物毒性极大并具有长期持续影响。
H411	对水生生物有毒并具有长期持续影响。
H412	对水生生物有害并具有长期持续影响。

安全数据表对于 BBS... 类型也有效。

补充信息

根据我们的知识和信息,此安全技术说明书提供的信息在其发布之日是正确的,所给出的信息仅作为安全操作、使用、处理、储存、运输和废弃等的指导，而不能被认为是担保或质量指标。此信息仅适用于指定的产品，对于本产品与其它物质的混合或与任何过程的结合不适用，除非特别指明。

AP_GP BOM Report

Qisda P/N	3J.6G701.A11
Qisda Item description	BEZEL FRONT BLACK QD2181AI-P
Maker	Qisda Molding Factory
Maker P/N	3J.6G701.A11
Create date	2025/09/12

Component type	Description	Supplier	Subpart type	Subpart Description	Subpart Supplier	Sample Description	Remark	Report No.	Test Date	Cd	Pb	Hg	Cr6+	PBBs/PBDEs	Br	Cl	Br+Cl	DIBP	DEHP	BBP	DBP	F	I	Exemptions
Plastic Housing	FR3010HF 901510	航耀	Plastic Resin of Housing	FR3010HF 901510	航耀	黑色塑胶颗粒	航耀是Covestro(科思创)代理商	QHJ24030388802/CH;QHJ24030388 01/CH	2024/04/10;2024/04/03	N.D	N.D	N.D	N.D	N.D	N.D	N.D	N.D	N.D	N.D	N.D	N.D	1570	N.D	
Summary data										N.D	N.D	N.D	N.D	N.D	N.D	N.D	N.D	N.D	N.D	N.D	N.D	1570	N.D	

GreenProductCheckList			
Applier	DivaPowerUser	Requester	DivaPowerUser
Part No	3J.6G701.A11	Description	BEZEL FRONT BLACK QD2181AI-P
Maker	Qisda Molding Factory	Maker P/N	3J.6G701.A11
Remark			

GP pattern

CE Integrative pattern	DIVA [Substances that Pose Risk to the Environment] 2015
Table of substances/group of substances, which are restricted by Annex XVII to REACH Regulation (for EE products cut to 2023/09/25)	EU RoHS [2011/65/EU+(EU)2015/863]+Packing [94/62/EC]+Battery [(EU) 2023/1542]
REACH [SVHC34] 2025-06-25 (250 substances)	

Control items:

Class A (Essential items)

No.	Control items	Subpart Group	Spec (ppm)	Test data (ppm)
1	Cadmium (Cd) / Cadmium Compounds 鎘及鎘化合物	Plastic Housing	100	N.D
2	Lead (Pb) / Lead Compounds 鉛及鉛化合物	Plastic Housing	100	N.D
3	Mercury (Hg) / Mercury Compounds 汞及汞化合物	Plastic Housing	1000	N.D
4	Hexavalent Chromium (Cr 6+) and its Compounds 六價鉻及其化合物	Plastic Housing	1000	N.D
5	PBBs / PBDEs / PBBEs/PBDOs 聚溴聯苯及溴聯苯醚/多溴化聯苯醚類	Plastic Housing	1000	N.D
178	Diisobutyl phthalate DIBP, 鄰苯二甲酸二異丁酯 CAS No.84-69-5	Plastic Housing	1000	N.D
365	Bis(2-ethylhexyl) phthalate (DEHP) 鄰苯二甲酸二(2-乙基己基)酯 CAS No.117-81-7	Plastic Housing	1000	N.D
366	Butyl benzyl phthalate (BBP) 鄰苯二甲酸甲苯基丁酯 CAS No.85-68-7	Plastic Housing	1000	N.D
367	Dibutyl phthalate (DBP) 鄰苯二甲酸二丁酯 CAS No.84-74-2	Plastic Housing	1000	N.D

Class B (Declaration items)

No.	Control items	Spec (ppm)	Concentration (ppm)	Use or Not	Contained purpose/ Remark

6	TBBP-A-bis Tetrabromobisphenol-A-bis-(2,3-dibromopropylether) 四溴雙酚-A-雙-(2.3-二溴丙醚) CAS No.21850-44-2	999999	Not use	N	
7	Polychlorinated biphenyls (PCBs) and terphenyls (PCTs) 多氯聯苯/多氯對聯三苯(多氯三聯苯) CAS No.1336-36-3; 61788-33-8; 26140-60-3 and others (please check Qisda Control item list)	0	Not use	N	
8	Polychlorinated naphthalene category (Cl>3, PCNs) 多氯奈及其衍生物 CAS No.70776-03-3 and others (please check Qisda Control item list)	0	Not use	N	
9	Short chain Chlorinated paraffins (SCCP, C10~C13), Cl≧50 wt% 短鏈氯化石蠟(氯化烷烴) CAS No.85535-84-8;108171-26-2;71011-12-6;61788-76-9	999999	Not use	N	
10	Mirex 滅蟻靈 CAS No.2385-85-5	999999	Not use	N	
11	Formaldehyde (monomer) 甲醛 CAS No.50-00-0	999999	Not use	N	
12	PVC (Polyvinyl Chloride) and PVC blends 聚氯乙烯及聚氯乙烯混合物 CAS No.9002-86-2	999999	Not use	N	
13	Organic tin compounds (Tributyl tin TBT, Triphenyl tin TPT compounds) 有機錫(三丁基, 三苯基)錫化合物 CAS No. Multiple, please check Qisda Control item list	1000	Not use	N	
14	Asbestos 石棉 CAS No.1332-21-4 and others (please check Qisda Control item list)	0	Not use	N	
15	AZO compounds 偶氮化合物 CAS No. Multiple, please check Qisda Control item list	30	Not use	N	
16	Ozone Depleting Substance (CFCs, HCFCs, Halon, HBFCs, CCl4, C2H3Cl3, CH3Br) 破壞臭氧層物質(氟氯碳化物, 含氯氟烴, 海龍, 含溴氟烴, 四氯化碳, 1,1,1-三氯乙烷, 溴化甲烷) CAS No. Multiple, please check Qisda Control item list	0	Not use	N	

17	(for packing material supplier only) Lead+Cd+Hg+Cr6+ (此項只適用包裝材供應商) 鉛+鎘+汞+六價鉻	100	Not use	N	
19	Nickel and its compoundn 鎳及鎳化合物 CAS No.7440-02-0 and any substances contains Nickel shall be declare.	999999	Not use	N	
20	Antimony and its Compounds 銻及銻化合物 CAS No.7440-36-0; 1309-64-4; 1314-60-9 and any substances contains Antimony shall be declare.	999999	Not use	N	
21	Arsenic and its Compounds 砷及砷化合物 CAS No.7440-38-2;1303-00-0 and any substances contains Arsenic shall be declare.	0	Not use	N	
22	Beryllium and its Compounds 鈹及鈹化合物 CAS No.7440-41-7; 11133-98-5 and any substances contains Beryllium shall be declare.	999999	Not use	N	
23	Cobalt and its Compounds 鈷及鈷化合物 CAS No.7440-48-4 and any substances contains Cobalt shall be declare.	999999	Not use	N	
24	Selenium and its Compounds 硒及硒化合物 CAS No.7782-49-2 and any substances contains Selenium shall be declare.	999999	Not use	N	
28	Pentachlorophenol (PCP) 五氯酚 CAS No.87-86-5 and others (please check Qisda Control item list)	999999	Not use	N	
29	Halogenated Aromatic Compounds (HACs) 鹵化芳香族 CAS No. Multiple, please check Qisda Control item list	999999	Not use	N	
31	Benzene 苯 CAS No.71-43-2	1000	Not use	N	
32	Toluene 甲苯 CAS No.108-88-3	999999	Not use	N	
33	Xylenes 二甲苯 CAS No.1330-20-7	999999	Not use	N	
34	Phenol (monomer) 酚,石碳酸(單體) CAS No.8002-07-1	999999	Not use	N	

37	Vinylchloride (monomer), VCM 氯乙烯(單體) CAS No.75-01-4	999999	Not use	N	
38	Phthalates (all monomers, include DEHP, DBP, BBP, DINP, DIDP, DNOP, DNHP, DIOP, Bis(2-methoxyethyl) phthalate) 鄰苯二甲酸酯 Any substances contains Phthalates shall be declare.	999999	Not use	N	
42	Radioactive Substance 放射性物質 CAS No. Multiple, please check Qisda Control item list	999999	Not use	N	
43	Polycyclic Aromatic Hydrocarbons (16 PAHs) 多環芳香族烴	999999	Not use	N	
44	Ethylene Glycolethers and Acetates (2-Methoxyethyl acetate and 2-Ethoxyethyl acetate) 乙二醇甲/乙醚及其醋酸酯 CAS No.111-15-9;110-49-6;110-80-5;111-96-6;109-86-4;32718-54-0;627-03-2	999999	Not use	N	
45	Bismuth and its Compounds 鉍及鉍化合物 CAS No.7440-69-9 and any substances contains Bismuth shall be declare.	999999	Not use	N	
46	Halogenated Naphthalenes 鹵化奈 CAS No.1321-65-9;1335-88-2;1321-64-8;2234-13-1	999999	Not use	N	
49	2,4,6,-Tritertiarybutylphenol; 2,4,6-Tris (tert-butyl) phenol (2,4,6-TTBP) 2,4,6- 三 – t –丁基苯酚 (2,4,6-第三丁基苯酚) CAS No.732-26-3	999999	Not use	N	
50	Hexachlorobenzene (HCB) 六氯苯 CAS No.118-74-1	0	Not use	N	
51	Aldrin 艾氏劑 CAS No.309-00-2	0	Not use	N	
52	Dieldrin 狄氏劑 CAS No.60-57-1	0	Not use	N	
53	Endrin 异狄氏劑 CAS No.72-20-8	0	Not use	N	
54	DDT 二氯二苯三氯乙烷 CAS No.50-29-3	0	Not use	N	

55	Bis(tributyltin) Oxide (TBTO) 雙三丁基氧化錫 CAS No.56-35-9	0	Not use	N	
56	N-P-Phenylenediamine N-P-二甲苯基-亞苯基二元胺 (苯二胺類化合物) CAS No. Multiple, please check Qisda Control item list	999999	Not use	N	
57	Chlorinated Hydrocarbons (CHCs)/Aliphatic CHCs/Halogenated Hydrocarbons 含氯碳氫化合物/脂肪族氯碳氫化合物/鹵化碳化氫類 CAS No. Multiple, please check Qisda Control item list	999999	Not use	N	
58	Yellow Phosphorous黃磷 CAS No.7723-14-0	999999	Not use	N	
59	Benzidine and its salts (4-(4-aminophenyl)aniline) 聯苯胺及其鹽類 CAS No. Multiple, please check Qisda Control item list	1000	Not use	N	
60	4-Nitrodiphenyl and its salts 4-硝基聯苯及其鹽類 CAS No.92-93-3	0	Not use	N	
61	Bis (Chloromethyl) ether (BCME) 二氯甲基醚 (雙-(氯甲基)二醚) CAS No.542-88-1	999999	Not use	N	
62	2-Naphylamine / Beta Naphthylamine and its salts 2-奈胺 / β奈胺及其鹽類 CAS No.91-59-8;553-00-4	1000	Not use	N	
63	Rubber cement containing Benzene, where the Benzene accounts for more than 5% of 含苯交糊、含苯容量佔該交糊溶劑(含稀釋劑)超過5% CAS No.--	999999	Not use	N	
64	Chlordane 氯丹類 CAS No.52005-35-4; 57-74-9	0	Not use	N	
65	Toxaphene 毒殺酚 CAS No.8001-35-2	999999	Not use	N	
66	DBBT (Monomethyl-dibromo-diphenyl methane) 單甲基二溴二苯基甲烷 CAS No.99688-47-8	0	Not use	N	

67	DBB (di-μ-oxo-di-n-butylstannichydroxyborane) 二- u -含氯 - 二- n -丁基羥基用烷 CAS No.75113-37-0	0	Not use	N	
68	Monomethyl-tetrachloro-diphenyl methane (Ugilec 141) 單甲基四氯二苯基甲烷 CAS No.76253-60-6	0	Not use	N	
69	Monomethyl-dichloro-diphenyl methane (Ugilec 121or C21) 單甲基二氯二苯基甲烷 CAS No.81161-70-8	0	Not use	N	
70	Chromium Compounds 鉻化合物 (除鉻、金屬鉻以外的鉻化合物) Any substances contains Chromium compounds shall be declare. (Except for chromium and metallic chromium)	999999	Not use	N	
87	Creosotes oil-wood preservatives (Wood and Packing material only) CAS No. Multiple, please check Qisda Control item list	0	Not use	N	
88	Expanded polystyrene(EPS) foam	0	Not use	N	
90	Trichloroethylene (C2HC13) 三氯乙烯 CAS No.79-01-6	999999	Not use	N	
91	Perchloroethylene (Tetrachloroethylene;C2C14) 四氯乙烯 CAS No.127-18-4	999999	Not use	N	
92	HBFCs, Hydrobromofluorocarbons 其他不完全鹵化氟溴化物(氫氟溴碳化合物)	999999	Not use	N	
93	TBBP-A Tetrabromobisphenol-A 四溴丙二酚/四溴雙酚-A CAS No.79-94-7	999999	Not use	N	
95	Hexachlorocyclohexane (HCH) isomers 六氯環已烷 CAS No.58-89-9;319-84-6;608-73-1;319-85-7	999999	Not use	N	
98	Nonylphenol/ethoxylates (NP/NPEs/NPEOs) and related substances 壬基酚與壬基酚聚氧乙烯醚及相關物質 CAS No.25154-52-3;104-40-5;68412-54-2;9016-45-9 and others (please check Qisda Control item list)	1000	Not use	N	

99	alkylphenols 烷基酚	999999	Not use	N	
101	All synthtetic musks 所有合成麝香 (含二甲苯麝香, 酮麝香) CAS No.81-15-2;541-91-3;81-14-1	999999	Not use	N	
102	PFOS (Perfluorooctane sulfonates) in parts 產品中所含之全氟辛烷磺化物 CAS No.1763-23-1 and others (please check Qisda Control item list)	999999	Not use	N	
103	PFOS (Perfluorooctane sulfonates) in preparations 準備作業時所含之全氟辛烷磺化物 CAS No.1763-23-1 and others (please check Qisda Control item list)	999999	Not use	N	
104	Tris-(1-aziridinyl) phosphinoxide (TEPA) 三啶基氧化磷 CAS No.5455-55-1	999999	Not use	N	
105	Tri-(2,3-dibromo-propyl) phosphate (TRIS, Tris-BP, TDBPP) 三(2,3-二溴丙基)磷酸酯 CAS No.126-72-7	999999	Not use	N	
106	Chlorobenzene 氯苯 CAS No.50717-45-8;180-90-7	999999	Not use	N	
107	2-(2H-1,2,3-Benzotriazole-2-YL)-4,6-di-tert-Butylphenol (UV-320) 2-(2'-羥基-3',5'-二叔丁基苯基)-苯並三唑 (特定苯並三氮唑); 紫外線吸收劑UV-320 CAS No.3846-71-7	0	Not use	N	
108	Dioxins and Furans (include PCDDs, PBDFs, PCDFs, PBDDs) 戴奧辛(二噩英)及夫喃 CAS No. Multiple, please check Qisda Control item list	0	Not use	N	
110	4-Aminodiphenyl/4-Aminodiphenyl and its salts 4-氨基聯苯/4-氨基聯苯及其鹽類 CAS No.92-67-1; 2113-61-3	1000	Not use	N	
111	Cobalt Chloride 氯化鈷 CAS No.7646-79-9	999999	Not use	N	
112	Hexabromocyclododecane (HBCD) and all major diastereoisomers 六溴環十二烷及其主要非對映異構體 CAS No. Multiple, please check Qisda Control item list	999999	Not use	N	

113	Medium-chain chlorinated paraffins (MCCP) [UVCB substances consisting of more than or equal to 80% linear chloroalkanes with carbon chain lengths within the range from C14 to C17] ●Alkanes, C14-17, chloro ●Tetradecane, chloro derivs. ●Alkanes, C14-16, chloro ●di-, tri- and tetrachlorotetradecane 中鏈氯化石蠟[UVCB物質包含大於或等於80%的直鏈氯代烷烴，碳鏈長度在C14至C17範圍內] CAS No.85535-85-9;198840-65-2;1372804-76-6	999999	Not use	N	
114	Perfluorooctyl acid (PFOA) and individual salts and esters of PFOA 全氟辛酸鹽類及其酯類 CAS No. 68141-02-6 and others, please check Qisda Control item list	999999	Not use	N	
115	DTDMAC/DODMAC/DSDMAC/DHTDMAC 二牛油基二甲基氯化銨/雙十八烷基二甲基氯化銨/二(硬化牛油)二甲基氯化銨 CAS No.68783-78-8; 107-64-2; 61789-80-8	999999	Not use	N	
116	Bisphenol A 雙酚A CAS No.80-05-7	200	Not use	N	
117	Triclosan 三氯沙(三氯羥基二苯醚) CAS No.3380-34-5	999999	Not use	N	
119	Perfluorocarbons (PFCs) 全氟碳化物 CAS No. Multiple, please check Qisda Control item list	999999	Not use	N	
120	Hydrofluorocarbons (HFCs) 氫氟碳化物 CAS No. Multiple, please check Qisda Control item list	999999	Not use	N	
121	Brominated flame retardents 溴系阻燃劑 CAS No. Multiple, please check Qisda Control item list	999999	Not use	N	
123	Sulfur Hexafluoride (SF6) 六氟化硫 CAS No.2551-62-4	999999	Not use	N	
124	4,4-Methylenedianiline (MDA, C13H14N2) 4-4二胺基二苯甲烷 CAS No.101-77-9	999999	Not use	N	
130	Hydrogen sulfide (H2S) 硫化氫 CAS No.7783-06-4	999999	Not use	N	

131	6-hydroxy-7-methoxy-5-benzofuranacrylic acid delta-lactone (8-MOP) 8-甲氧基補骨酯 (Methoxsalen) CAS No.298-81-7	999999	Not use	N	
132	Ethyleneoxide (Dimethylene;Oxirane) 環氧乙烷 CAS No.75-21-8	999999	Not use	N	
136	PBDOs, PBBOs 多溴聯苯醚氧化物 CAS No.--	999999	Not use	N	
137	Beryllium Oxide 氧化鈹	999999	Not use	N	
146	Anthracene 蒽 CAS No.120-12-7	999999	Not use	N	
148	Perchlorates 過氯酸鹽 CAS No. Multiple, please check Qisda Control item list	999999	Not use	N	
153	Perfluoro alkyl sulfonates (PFAS) 全氟烷基磺酸鹽 CAS No. Multiple, please check Qisda Control item list	999999	Not use	N	
154	Heptachlor 飛佈達 CAS No.76-44-8	999999	Not use	N	
155	Dicofol 大克蟎; 三氯殺蟎醇; (2,2,2 三氯 1,1 雙(4 氯苯基)乙醇) CAS No.115-32-2	999999	Not use	N	
156	Halogenated diarylalcanes and Halogenatedbenzenes 鹵代二芳基類及鹵代苯類 CAS No.133059-44-6	999999	Not use	N	
157	Hexachloro-1,3-butadiene (HCBD) 六氯丁二烯 CAS No.87-68-3	999999	Not use	N	
158	Sodium dichromate, dihydrate 重鉻酸鈉二水合物 CAS No.7789-12-0;10588-01-9	999999	Not use	N	
159	Lead hydrogen arsenate 砷酸氫鉛 CAS No.7784-40-9	999999	Not use	N	
160	Triethyl arsenate 三乙基砷酸酯 CAS No.15606-95-8	999999	Not use	N	
162	Pentachlorobenzene 五氯苯 CAS No.608-93-5	999999	Not use	N	

164	Hexachloroethane 六氯乙烷 CAS No.67-72-1	0	Not use	N	
165	DMF (Dimethylfumarate) 富馬酸二甲酯 CAS No.624-49-7	0.1	Not use	N	
166	Coal Tar Distillates, heavy oils 餾出液（煤焦油），重油，重蒽油 CAS No.90640-86-1	999999	Not use	N	
167	Coal Tar Distillates, heavy oil, pyrene fraction 餾出液（煤焦油），重油，芘組分，重蒽油的重蒸餾物 CAS No.91995-42-5	999999	Not use	N	
168	Coal Tar residues, pitch distn 殘餘物（煤焦油），瀝青蒸餾物；瀝青重蒸餾物 CAS No.92061-94-4	999999	Not use	N	
169	Coal Tar residues, pitch pyrene fraction CAS No.91995-52-7	999999	Not use	N	
170	Coal Tar residues, pitch high temeperature 瀝青，煤焦油，高溫；瀝青 CAS No. 65996-93-2	999999	Not use	N	
171	Chlorinated flame retardants (CFR) 氯系阻燃劑 CAS No. Any substances contains Chlorinated flame retardants shall be declare.	999999	Not use	N	
172	2,4-Dinitrotoluene 2,4-二硝基甲苯 CAS No.121-14-2	999999	Not use	N	
173	Anthracene oil 蒽油 CAS No.90640-80-5	0	Not use	N	
174	Anthracene oil, anthracene paste, distn. Lights 蒽油, 蒽糊, 輕油 CAS No.91995-17-4	999999	Not use	N	
175	Anthracene oil, anthracene paste, anthracene fraction 蒽油, 蒽糊, 蒽餾分離液 CAS No.91995-15-2	999999	Not use	N	
176	Anthracene oil, anthracene-low 蒽油, 含蒽量少 CAS No.90640-82-7	999999	Not use	N	
177	Anthracene oil, anthracene paste 蒽油, 蒽糊 CAS No.90640-81-6	999999	Not use	N	

179	Aluminosilicate, Refractory Ceramic Fibres (RCF) 矽酸鋁, 陶瓷耐火纖維 CAS No.--	999999	Not use	N	
180	Zirconia Aluminosilicate, Refractory Ceramic Fibres (Zr-RCF) CAS No.--	999999	Not use	N	
181	Lead chromate molybdate sulfate red (C.I. Pigment Red 104) 紅色鉬鉻酸鉛硫酸鹽 (C.I.紅色顏料 104) CAS No.12656-85-8	999999	Not use	N	
182	Acrylamide 丙烯醯胺 CAS No.79-06-1	1000	Not use	N	
183	Tris(2-chloroethyl)phosphate TCEP, 三2-(氯乙基)磷酸酯, 三氯乙基磷酸酯阻燃增塑劑 CAS No.115-96-8	999999	Not use	N	
184	Lead chromate 鉻酸鉛 CAS No.7758-97-6	999999	Not use	N	
185	Lead sulfochromate yellow (C.I. Pigment Yellow 34) 黃色硫化鉻酸鉛 (C.I.黃色顏料 34) CAS No.1344-37-2	999999	Not use	N	
186	Diarsenic Pentoxide 五氧化二砷 CAS No.1303-28-2	999999	Not use	N	
187	Diarsenic Trioxide 三氧化二砷 CAS No.1327-53-3	999999	Not use	N	
188	Phthalates (DEHP,DBP,BBP,DIBP) CAS No.117-81-7; 84-74-2; 85-68-7; 84-69-5	999999	Not use	N	
189	Phthalates (DINP, DIDP, DNOP) CAS No.28553-12-0;68515-48-0;26761-40-0;68515-49-1;117-84-0;71549-78-5	999999	Not use	N	
190	Persistent Organic Pollutants (POPs 持久性有機汙染物) CAS No. Multiple, please check Qisda Control item list	999999	Not use	N	
192	Triphenyl phosphate (TPP) 磷酸三苯脂 CAS No.115-86-6	999999	Not use	N	

194	Dioctyltin oxide (DOT) and its compound 二辛基錫化合物 CAS No. Multiple, please check Qisda Control item list	1000	Not use	N	
195	Dibutyltin oxide (DBT) and its compound 二丁基锡化合物 CAS No. Multiple, please check Qisda Control item list	1000	Not use	N	
196	Boric acid 硼酸 CAS No.10043-35-3; 11113-50-1	999999	Not use	N	
197	Disodium tetraborate anhydrous 無水四硼酸二鈉 CAS No.1303-96-4;1330-43-4; 12179-04-3	999999	Not use	N	
198	Tetraboron disodium heptaoxide hydrate 水合硼酸鈉 CAS No.12267-73-1	999999	Not use	N	
199	Sodium chromate 鉻酸鈉 CAS No.7775-11-3	999999	Not use	N	
200	Potassium chromate 鉻酸鉀 CAS No.7789-00-6	999999	Not use	N	
201	Ammonium dichromate 重鉻酸銨 CAS No.7789-09-05	999999	Not use	N	
202	Potassium dichromate 重鉻酸鉀 CAS No.7778-50-9	999999	Not use	N	
203	1,2,3-Trichlorobenzene 1,2,3三氯苯 CAS No.87-61-6	999999	Not use	N	
204	1,2,4-Trichlorobenzene 1,2,4-三氯苯 CAS No.120-82-1	1000	Not use	N	
205	1,3,5-Trichlorobenzene 1,3,5-三氯苯 CAS No.108-70-3	999999	Not use	N	
206	Cobalt(II) sulphate 硫酸鈷 CAS No.10124-43-3	999999	Not use	N	
207	Cobalt(II) dinitrate 硝酸鈷 CAS No.10141-05-6	999999	Not use	N	
208	Cobalt(II) carbonate 碳酸鈷 CAS No.513-79-1	999999	Not use	N	
209	Cobalt(II) diacetate 醋酸鈷 CAS No.71-48-7	999999	Not use	N	

210	2-Methoxyethanol 乙二醇單甲醚 CAS No.109-86-4	999999	Not use	N	
211	2-Ethoxyethanol 乙二醇單乙醚 CAS No.110-80-5	999999	Not use	N	
212	Chromium trioxide 三氧化鉻 CAS No.1333-82-0	999999	Not use	N	
213	Chromic acid 鉻酸 CAS No.7738-94-5	999999	Not use	N	
214	Dichromic acid 重鉻酸 CAS No.13530-68-2	999999	Not use	N	
215	Oligomers of chromic acid and dichromic acid 鉻酸及重鉻酸的寡聚體 CAS No.--	999999	Not use	N	
216	Chromium(III) and chromium compounds in surface preparations of products and parts intended to come into direct and prolonged contact with the skin 使用於長時間接觸皮膚部位的三價鉻 CAS No.16065-83-1 and others	999999	Not use	N	
217	Latex and latex compounds in surface preparations of products and parts intended to come into direct and prolonged contact with the skin 使用於長時間接觸皮膚部位的乳膠 CAS No.9002-86-2	999999	Not use	N	
218	Phthalates (DIHP) 鄰苯二甲酸二(C6-8支鏈與直鏈)烷基酯，富C7 CAS No.71888-89-6	999999	Not use	N	
219	Phthalates (DHNUP) 鄰苯二甲酸二(C7-11支鏈與直鏈)烷基酯 CAS No.68515-42-4	999999	Not use	N	
220	4-[4,4'-bis(dimethylamino) benzhydrylidene] cyclohexa-2,5-dien-1-ylidene] dimethylammonium chloride (C.I. Basic Violet 3) 鹼性紫3, 結晶紫, 甲基紫, 龍膽紫 CAS No.548-62-9; 603-48-5; 14426-25-6	999999	Not use	N	
221	2-ethoxyethyl acetate 乙二醇乙醚乙酸酯 CAS No.111-15-9	999999	Not use	N	
222	Strontium chromate 鉻酸鍶 CAS No.7789-06-2	999999	Not use	N	

223	Hydrazine 聯氨(水合肼) CAS No.7803-57-8, 302-01-2	999999	Not use	N	
224	1-methyl-2-pyrrolidone, N-methyl-2-pyrrolidone (NMP) N-甲基吡咯烷酮 CAS No.872-50-4	3000	Not use	N	
225	1,2,3-trichloropropane 1,2,3-三氯丙烷 CAS No.96-18-4	999999	Not use	N	
226	Phenylenediamines and its salts, selected 苯二胺類化合物及其鹽類 CAS No. Multiple, please check Qisda Control item list	999999	Not use	N	
227	Triorganotin compounds, all members 所有三烴基錫化合物 CAS No. Multiple, please check Qisda Control item list	0	Not use	N	
228	Benzo(a)pyrene (BaP) 苯并(a)芘 BaP (C20H12) CAS No.50-32-8	1	Not use	N	
229	Dichromium tris(chromate) 鉻酸鉻 CAS No.24613-89-6	999999	Not use	N	
230	Potassium hydroxyoctaoxodizincatedi-chromate 氫氧化鉻酸鋅鉀 CAS No.11103-86-9	999999	Not use	N	
231	Pentazinc chromate octahydroxide 八氫氧化五鉻酸鋅 CAS No.49663-84-5	999999	Not use	N	
232	Formaldehyde, oligomeric reaction products with aniline (technical MDA) 甲醛與苯胺的寡聚反應物 CAS No.25214-70-4	999999	Not use	N	
233	Bis(2-methoxyethyl) phthalate (DMEP) 鄰苯二甲酸二(2-甲氧乙基)酯 CAS No.117-82-8	999999	Not use	N	
234	2-Methoxyaniline; o-Anisidine 鄰氨基苯甲醚(鄰甲氧基苯胺) CAS No.90-04-0	999999	Not use	N	
235	4-(1,1,3,3-tetramethylbutyl)phenol,(4-tert-Octylphenol) 對特辛基苯酚/辛基酚 CAS No.140-66-9	999999	Not use	N	

236	1,2-Dichloroethane 1,2-二氯乙烷 CAS No.107-06-2	999999	Not use	N	
237	Bis(2-methoxyethyl) ether 雙(2-甲氧基乙基醚) CAS No.111-96-6	999999	Not use	N	
238	Arsenic acid 砷酸 CAS No.7778-39-4	999999	Not use	N	
239	Calcium arsenate 砷酸鈣 CAS No.7778-44-1	999999	Not use	N	
240	Trilead diarsenate 砷酸鉛 CAS No.3687-31-8	999999	Not use	N	
241	N,N-dimethylacetamide (DMAC) N,N-二甲基乙酰胺 CAS No.127-19-5	999999	Not use	N	
242	2,2'-dichloro-4,4'-methylenedianiline (MOCA) 2,2'-二氯-4,4'-二氨基二苯基甲烷 CAS No.101-14-4	999999	Not use	N	
243	Phenolphthalein 酚酞 CAS No.77-09-8	999999	Not use	N	
244	Lead azide Lead diazide 疊氮化鉛 CAS No.13424-46-9	999999	Not use	N	
245	Lead styphnate 中性斯蒂酚酸鉛 CAS No.15245-44-0	999999	Not use	N	
246	Lead dipicrate 苦味酸鉛 CAS No.6477-64-1	999999	Not use	N	
248	1,2-bis(2-methoxyethoxy)ethane (TEGDME; triglyme);Triethylene glycol dimethyl ether 三甘醇二甲醚 CAS No.112-49-2	999999	Not use	N	
249	1,2-dimethoxyethane;ethylene glycol dimethyl ether (EGDME) 1，2-二甲氧基乙烷(乙二醇二甲醚) CAS No.110-71-4	999999	Not use	N	
250	Diboron trioxide 三氧化二硼 (硼酐, 氧化硼) B2O3 CAS No.1303-86-2	999999	Not use	N	
251	Formamide 甲醯胺 (氨基甲醛;甲酰胺) CAS No.75-12-7	999999	Not use	N	

252	Lead(II)bis(methanesulfonate);Methanesulfonic acid, lead(2+) salt 甲磺酸鉛(II)溶液 (甲基磺酸鉛) CAS No.17570-76-2	999999	Not use	N	
253	TGIC(1,3,5-tris(oxiranylmethyl)-1,3,5-triazine-2,4,6(1H,3H,5H)-trione) 異氰尿酸三縮水甘油酯 (1,3,5-三缩水甘油-S-三嗪三酮) CAS No.2451-62-9	999999	Not use	N	
254	β-TGIC(1,3,5-tris[(2S and2R)-2,3-epoxypropyl]-1,3,5-triazine-2,4,6-(1H,3H,5H)-trione) 異氰酸β-三縮水甘油酯 CAS No.59653-74-6	999999	Not use	N	
255	4,4'-bis(dimethylamino)benzophenone(Michler's ketone) 米氏酮 (4,4'-四甲基二氨二苯酮;4,4'-二(N,N-二甲氨基)二苯甲酮) CAS No.90-94-8	999999	Not use	N	
256	N,N,N',N'-tetramethyl-4,4'-methylenedianiline (Michler's base) 米氏鹼 (4,4'-亞甲基雙(N,N-二甲基苯胺)) CAS No.101-61-1	999999	Not use	N	
257	[4-[[4-anilino-1-naphthyl][4-(dimethylamino)phenyl]methylene]cyclohexa-2,5-dien-1-ylidene]dimethylammonium chloride (C.I. Basic Blue 26) 鹼性藍26 (維多利亞藍B) CAS No.2580-56-5	999999	Not use	N	
258	α,α-Bis[4-(dimethylamino)phenyl]-4(phenylamino)naphthalene-1-methanol (C.I. Solvent Blue 4) 溶劑藍4 CAS No.6786-83-0	999999	Not use	N	
259	4,4'-bis(dimethylamino)-4''-(methylamino)trityl alcohol (C.I. Solvent Violet 8) 溶劑紫8 (α,α-二[(二甲氨基)苯基]-4-甲氨基苯甲醇) CAS No.561-41-1	999999	Not use	N	
260	Polycyclic Aromatic Hydrocarbons (18 PAHs) 多環芳香族烴	999999	Not use	N	
263	Cyclohexane 環己烷 CAS No.110-82-7	0	Not use	N	
264	Specified Lead Carbons 特定碳酸鉛類 CAS No.598-63-0; 1319-46-6	0	Not use	N	

265	Specific Lead Sulphates 特定硫酸鉛類 CAS No.7446-14-2; 15739-80-7	0	Not use	N	
266	Other Organic Tin compounds (except tri- and di-substituted organic tin compounds) 其他有機錫化合物 (除三取代與二取代有機錫化合物) CAS No.1461-25-2; 597-64-8; 595-90-4; 15231-57-9; 51590-67-1; 3091-32-5; 2406-68-0	1000	Not use	N	
268	Tri-o-cresyl phosphate or Tricresyl phosphate (TCP) 磷酸三甲苯酯 CAS No.1330-78-5	999999	Not use	N	
269	[Phthalato(2-)]dioxotrilead 二鹽基鄰苯二甲酸鉛 CAS No.69011-06-9	999999	Not use	N	
270	1,2-Benzenedicarboxylic acid, dipentylester, branched and linear (bis-C5-alkyl-(linear and branched)phthalate) 支鏈和直鏈1，2-苯二羧二戊酯 CAS No.84777-06-0	999999	Not use	N	
271	1,2-Diethoxyethane (Diethyl glycol; Ethylene Glycol Diethyl Ether) 乙二醇二乙醚 CAS No.629-14-1	999999	Not use	N	
272	1-Bromopropane 溴代正丙烷 CAS No.106-94-5	999999	Not use	N	
273	3-Ethyl-2-methyl-2-(3-methylbutyl)-1,3-oxazolidine 3-乙基-2-甲基-2-(3-甲基丁基)噁唑烷 CAS No.143860-04-2	999999	Not use	N	
274	4-(1,1,3,3-Tetramethylbutyl)phenol, ethoxylated (covering well-defined substances and UVCB substances, polymers and homologues) 乙氧化 4-(1,1,3,3-四甲基丁基)苯酚(含蓋明確定義物質、UVCB物質、聚合物與同系物) CAS No.2315-67-5;9036-19-5;9002-93-1;2497-59-8;2315-61-9	999999	Not use	N	
275	4,4'-Methylenedi-o-toluidine 4,4'-二氨基-3,3'-二甲基二苯甲烷 CAS No.838-88-0	999999	Not use	N	
276	4,4'-Oxydianiline 4,4'-二氨基二苯醚 CAS No.101-80-4	999999	Not use	N	

277	4-Aminoazobenzene (4-Phenylazoaniline, Aniline Yellow) 4-阿基苯甲酯 CAS No.60-09-3	999999	Not use	N	
278	4-Methyl-m-phenylenediamine (4-methyl-m-phenylenediamine (2,4-toluene-diamine)) 2,4-二氨基甲苯 CAS No.95-80-7	999999	Not use	N	
279	4-Nonylphenol, branched and linear, ethoxylated 乙氧基化支鏈和直鏈-4-壬基酚(烷基直鏈及/或支鏈以 9 個碳共價於乙氧化苯酚的對位, 含蓋所有由單一或多種異構物組合的 UVCB 物質、明確定義物質、聚合物與同系物) CAS No.Multiple, please check Qisda Control item list	999999	Not use	N	
280	6-Methoxy-m-toluidine; 2-Methoxy-5-methylaniline; p-Cresidine 2-甲氧基-5-甲基苯胺 CAS No.120-71-8	999999	Not use	N	
281	Acetic acid, lead salt, basic 堿式乙酸鉛 CAS No.51404-69-4	999999	Not use	N	
282	Bis(pentabromophenyl) ether (DecaBDE) 十溴二苯醚 CAS No.1163-19-5	999999	Not use	N	
283	Diazene-1,2-dicarboxamide (C,C'-azodi(formamide)) 偶氮二甲酰胺 CAS No.123-77-3	999999	Not use	N	
284	Dibutyltin dichloride (DBTC) 二丁基二氯化锡 CAS No.683-18-1	999999	Not use	N	
285	Diethyl sulphate 硫酸二乙酯 CAS No.64-67-5	999999	Not use	N	
286	Diisopentylphthalate (DIPP) 鄰苯二甲酸二异戊酯 CAS No.605-50-5	999999	Not use	N	
287	Dimethyl sulphate 硫酸二甲酯 CAS No.77-78-1	999999	Not use	N	
288	Dinoseb 二硝丁酚 (地樂酚) CAS No.88-85-7	999999	Not use	N	
289	Dioxobis(stearato)trilead 双(十八酸基)二氧代三鉛 CAS No.12578-12-0	999999	Not use	N	

290	Fatty acids, C16-18, lead salts C16-18- 脂肪酸鉛鹽 CAS No.91031-62-8	999999	Not use	N	
291	Furan 呋喃 CAS No.110-00-9	999999	Not use	N	
292	Henicosafluoroundecanoic acid 全氟十一烷酸 CAS No.2058-94-8	0.025	Not use	N	
293	Heptacosafluorotetradecanoic acid 全氟代十四酸 CAS No.376-06-7	0.025	Not use	N	
294	Lead bis(tetrafluoroborate) 四氟硼酸鉛 CAS No.13814-96-5	999999	Not use	N	
295	Lead cyanamidate 氨基氰鉛(2+)鹽(1:1) CAS No.20837-86-9	999999	Not use	N	
296	Lead dinitrate 硝酸鉛 CAS No.10099-74-8	999999	Not use	N	
297	Lead monoxide 氧化鉛(黃丹) PbO CAS No.1317-36-8	999999	Not use	N	
298	Lead oxide sulphate 碱式硫酸鉛 CAS No.12036-76-9	999999	Not use	N	
299	Lead tetroxide 四氧化三鉛 Pb3O4 CAS No.1314-41-6	999999	Not use	N	
300	Lead titanium trioxide 鈦酸鉛 CAS No.12060-00-3	999999	Not use	N	
301	Lead Titanium Zirconium Oxide 鈦酸鉛鎬 CAS No.12626-81-2	999999	Not use	N	
302	Methoxyacetic acid 甲氧基乙酸 CAS No.625-45-6	999999	Not use	N	
303	N,N-dimethylformamide (Formyldimethylamine) N,N-二甲基甲酰胺 CAS No.68-12-2	3000	Not use	N	
304	N-methylacetamide N-甲基乙酰胺 CAS No.79-16-3	999999	Not use	N	
305	N-pentyl-isopentylphthalate (nPiPP) 鄰苯二甲酸正戊基异戊基酯 CAS No.776297-69-9	999999	Not use	N	

306	o-Aminoazotoluene 鄰氨基偶氮甲苯(氨偶氮苄) CAS No.97-56-3	30	Not use	N	
307	o-Toluidine; 2-Aminotoluene 鄰甲苯胺 CAS No.95-53-4	999999	Not use	N	
308	Pentacosafluorotridecanoic acid 全氟十三酸 CAS No.72629-94-8	0.025	Not use	N	
309	Pentalead tetraoxide sulphate 氧化鉛與硫酸鉛的複合物 CAS No.12065-90-6	999999	Not use	N	
310	Propylene oxide;1,2-epoxypropane; methyloxirane 環氧丙烷 CAS No.75-56-9	999999	Not use	N	
311	Pyrochlore, antimony lead yellow C.I.颜料黃41 CAS No.8012-00-8	999999	Not use	N	
312	Silicic acid, barium salt, lead-doped 摻雜鉛的矽酸鋇 CAS No.68784-75-8	999999	Not use	N	
313	Silicic acid, lead salt 矽酸鉛 CAS No.11120-22-2	999999	Not use	N	
314	Sulfurous acid, lead salt, dibasic 亞硫酸鉛(II) CAS No.62229-08-7	999999	Not use	N	
315	Tetraethyllead 四乙基鉛 CAS No.78-00-2	999999	Not use	N	
316	Tetralead trioxide sulphate (Lead Sulfate Tribasic) 三堿式硫酸鉛 CAS No.12202-17-4	999999	Not use	N	
317	Tricosafluorododecanoic acid 全氟十二烷酸 CAS No.307-55-1	0.025	Not use	N	
318	Basic lead carbonate (trilead bis(carbonate)dihydroxide) 堿式碳酸鉛 CAS No.1319-46-6	0	Not use	N	
319	Trilead dioxide phosphonate 磷酸氧化鉛 CAS No.12141-20-7	999999	Not use	N	

320	Hexahydromethylphathalic anhydride, Hexahydro-4-methylphathalic anhydride, Hexahydro-1-methylphathalic anhydride, Hexahydro-3-methylphathalic anhydride 甲基六氫苯酐、4- 甲基六氫苯酐、甲基六氫化鄰苯二甲酸酐、3- 甲基六氫苯二甲酯酐 CAS No.25550-51-0; 19438-60-9; 48122-14-1; 57110-29-9	999999	Not use	N	
321	Cyclohexane-1,2-dicarboxylic anhydride [1]cis-cyclohexane-1,2-dicarboxylic anhydride [2]trans-cyclohexane-1,2-dicarboxylic anhydride [3][The individual cis- [2] and trans- [3] isomer substances and all possible combinations of the cis- and trans- isomers [1] are covered by this entry]. 六氫鄰苯二甲酸酐，包括該物質的左旋、右旋單體及所有左、右旋的組合 CAS No.85-42-7;13149-00-3;14166-21-3	999999	Not use	N	
323	Chlordecone 十氯酮 CAS No.143-50-0	999999	Not use	N	
324	2-(2H-benzotriazol-2-yl)-4,6-ditertpentylphenol (UV-328) 紫外線吸收劑UV-328 CAS No.25973-55-1	999999	Not use	N	
325	2-(2H-benzotriazol-2-yl)-4-(tert-butyl)-6-(sec-butyl) phenol (UV-350) (2-(2'-羟基-3'-異丁基-5'-叔丁基苯基)苯并三唑)UV-350 CAS No.36437-37-3	999999	Not use	N	
326	2,4-di-tert-butyl-6-(5-chlorobenzotriazol-2-yl)phenol (UV-327) 紫外線吸收劑UV-327 CAS No.3864-99-1	999999	Not use	N	
327	4-Nonylphenol, branched and linear, ethoxylated CAS No. Multiple, please check Qisda Control item list	999999	Not use	N	
328	Ammonium pentadecafluorooctanoate (APFO) CAS No.3825-26-1	999999	Not use	N	
329	Cadmium oxide (CdO) 氧化鎘 CAS No.1306-19-0	999999	Not use	N	
330	Dipentyl phthalate (DPP) 鄰苯二甲酸二戊酯 CAS No.131-18-0	999999	Not use	N	

331	Pentadecafluorooctanoic acid (PFOA) 全氟辛酸 CAS No.335-67-1	999999	Not use	N	
332	Di-n-pentyl phthalate (DnPP) 鄰苯二甲酸二戊酯 CAS No.118-95-6	999999	Not use	N	
333	Di(2-Propyl Heptyl) phthalate (DPHP) 鄰苯二甲酸二（2-丙基庚）酯 CAS No.53306-54-0	999999	Not use	N	
334	Bis(2-methoxyethyl) phthalate 鄰苯二甲酸二(2-甲氧乙基)酯 (DMEP) CAS No.117-82-8	999999	Not use	N	
335	Dihexyl phthalate, Di-n-hexyl phthalate (DNHP) 鄰苯二甲酸二已酯 CAS No.84-75-3	999999	Not use	N	
336	Trixylyl phosphate 磷酸三（二甲苯）酯 CAS No.25155-23-1	999999	Not use	N	
337	Imidazolidine-2-thione; 2-imidazoline-2-thiol 亞乙基硫脲 CAS No.96-45-7	999999	Not use	N	
338	C.I. Direct Black 38; Disodium 4-amino-3-[[4'-[(2,4-diaminophenyl)azo][1,1'-biphenyl]-4-yl]azo] -5-hydroxy-6-(phenylazo)naphthalene-2,7-disulphonate 直接染料黑色38號 CAS No.1937-37-7	999999	Not use	N	
339	C.I. Direct Red 28; Disodium 3,3'-[[1,1'-biphenyl]-4,4'-diylbis(azo)]bis(4-aminonaphthalene-1- sulphonate) 直接染料紅色28號 CAS No.573-58-0	999999	Not use	N	
340	Cadmium sulfide (CdS) 硫化鎘 CAS No.1306-23-6	999999	Not use	N	
341	Lead di(acetate) 醋酸鉛(Ⅱ) CAS No.301-04-2	999999	Not use	N	
342	Tris(2-chloro-1-methylethyl) phosphate (TCPP) 磷酸三(2-氯丙基)酯 CAS No.13674-84-5	999999	Not use	N	
343	Tris(1,3-Dichloro-2-propyl) phosphate (TDCPP) 磷酸三(1,3-二氯異丙基)酯 CAS No.13674-87-8	999999	Not use	N	

344	Phenylmercury acetate 乙酸苯汞 (醋酸苯汞) CAS No.62-38-4	100	Not use	N	
345	Phenylmercury propionate 丙酸苯汞 CAS No.103-27-5	100	Not use	N	
346	Phenylmercury 2-ethylhexanoate 異辛酸苯汞 CAS No.13302-00-6	100	Not use	N	
347	Phenylmercury octanoate 辛酸苯汞 CAS No.13864-38-5	100	Not use	N	
348	Phenylmercury neodecanoate 新癸酸苯汞 CAS No.26545-49-3	100	Not use	N	
349	1,2-Benzenedicarboxylic acid, dihexyl ester, branched and linear (DIHP)鄰苯二甲酸二己酯（支鏈和直鏈） CAS No.68515-50-4	999999	Not use	N	
350	Cadmium chloride 氯化鎘 CAS No.10108-64-2	999999	Not use	N	
351	Sodium perborate； perboric acid, sodium salt 過硼酸鈉水合物 CAS No.15120-21-5;13517-20-9;11138-47-9;125022-34-6;90568-23-3	999999	Not use	N	
352	Sodium peroxometaborate 過硼酸鈉 CAS No.7632-04-4	999999	Not use	N	
353	Benzenamine, N-phenyl-, Reaction Products with Styrene and 2,4,4-Trimethylpentene (BNST) 烷基化二苯胺(二苯胺與苯乙烯和 2,4,4-三甲基戊烯的反應產物) CAS No.68921-45-9	999999	Not use	N	
359	Methylenediphenyl diisocyanate (MDI) and its isomers 二苯基甲烷二異氰酸酯及其同分異構體 CAS No.26447-40-5; 101-68-8; 5873-54-1; 2536-05-2	1000	Not use	N	
360	Navy Blue; marineblau 018112; A mixture of: disodium (6-(4-anisidino)-3- sulfonato-2-(3,5-dinitro-2-oxidophenylazo)-1- naphtholato)(1-(5-chloro-2-oxidophenylazo)-2-naphtholato)chromate(1-);trisodium bis(6-(4-anisidino)-3-sulfonato-2-(3,5- dinitro-2-oxidophenylazo)-1-naphtholato)chromate(1-) 海軍藍 CAS No.118685-33-9	1000	Not use	N	

361	2-ethylhexyl 10-ethyl-4,4-dioctyl-7-oxo-8-oxa-3,5-dithia-4-stannatetradecanoate (DOTE) 二正辛基-双（2-乙基己基巯基乙酸酯）錫 CAS No.15571-58-1	999999	Not use	N	
362	Cadmium fluoride 氟化鎘 CAS No.7790-79-6	999999	Not use	N	
363	Cadmium sulphate 硫酸鎘 CAS No.10124-36-4;31119-53-6	999999	Not use	N	
364	Reaction mass of 2-ethylhexyl10-ethyl-4,4-dioctyl-7-oxo-8-oxa-3,5-dithia-4-stannatetradecanoate and 2-ethylhexyl10-ethyl-4-[[2-[(2-ethylhexyl)oxy]-2-oxoethyl]thio]-4-octyl-7-oxo-8-oxa-3,5-dithia-4-stannatetradecanoate (reaction mass of DOTE and MOTE) 二正辛基-双（2-乙基己基巯基乙酸酯）錫和單辛基-三(2-乙基己基巯基乙酸酯）錫的反應物 CAS No.--	999999	Not use	N	
368	Diethyl phthalate (DEP) 鄰苯二甲酸二乙酯 CAS No.84-66-2	999999	Not use	N	
369	Di-n-octyl phthalate (DNOP) 鄰苯二甲酸二正辛酯 CAS No.117-84-0	999999	Not use	N	
370	Naphthalene (Nap)萘 Nap (C10H8) CAS No.91-20-3	999999	Not use	N	
371	1,2-benzenedicarboxylic acid, di-C6-10-alkylesters;1,2-benzenedicarboxylic acid, mixed decyl and hexyl and octyl diesters with ≥ 0.3% of dihexyl phthalate (EC No. 201-559-5);鄰苯二甲酸二（C6-10）烷基酯; (癸基，己基，辛基）酯與1，2-鄰苯二甲酸的複合物且鄰苯二甲酸二己酯含量≥0.3% CAS No.68515-51-5;68648-93-1	999999	Not use	N	
372	5-sec-butyl-2-(2,4-dimethylcyclohex-3-en-1-yl)-5-methyl-1,3-dioxane [1], 5-sec-butyl-2-(4,6-dimethylcyclohex-3-en-1-yl)-5-methyl-1,3-dioxane [2] [covering any of the individual isomers of [1] and [2] or any combination thereof] 5-仲丁基-2-（2,4-二甲基環丁-3-烯-1-基）-5-甲基-1,3-二惡烷[1]，5-仲丁基-2-（4,6-二甲基環己-3-烯-1-基）-5-甲基-1,3-二惡烷[2] [覆蓋任何[1]和[2]或者其任意組合的單獨的異構體(卡拉花醛及其同分易構物) CAS No.--	999999	Not use	N	
373	1,3-Propanesultone 1,3-丙烷磺内酯 CAS No.1120-71-4	999999	Not use	N	

374	Dicyclohexyl phthalate(DCHP) 鄰苯二甲酸二環己酯 CAS No.84-61-7	999999	Not use	N	
375	hexamethylene diacrylate (hexane-1,6-diol diacrylate) 1,6-己二醇二丙烯酸酯 CAS No.13048-33-4	999999	Not use	N	
376	Nitrobenzene 硝基苯 CAS No.98-95-3	999999	Not use	N	
377	Perfluorononan-1-oic acid (2,2,3,3,4,4,5,5,6,6,7,7,8,8,9,9,9-heptadecafluorononanoic acid and its sodium and ammonium salts 全氟壬酸及其鈉鹽和銨鹽 CAS No.375-95-1; 21049-39-8; 4149-60-4	0.025	Not use	N	
380	Didecyl phthalate 鄰苯二甲酸二癸酯 CAS No.84-77-5	999999	Not use	N	
381	Dipropyl phthalate(DPRP) 鄰苯二甲酸二丙酯 CAS No.131-16-8	999999	Not use	N	
382	Specified PAHs (BaP,BeP,BaA,CHR,BbFA,BjFA,BkFA,DBAhA) 特定多環芳香族 CAS No.50-32-8; 192-97-2; 56-55-3; 218-01-9; 205-99-2; 205-82-3; 207-08-9; 53-70-3	1	Not use	N	
383	(±)-1,7,7-trimethyl-3-[(4-methylphenyl)methylene]bicyclo[2.2.1]heptane-2-one (4-methylbenzylidene camphor) (3E)-1,7,7-三甲基-3-[(4-甲基苯基)亞甲基]雙環[2.2.1]庚烷-2-酮(3-(4-甲基苯亞甲基)樟腦) CAS No.36861-47-9	999999	Not use	N	
384	1,7,7-trimethyl-3-(phenylmethylene)bicyclo[2.2.1]heptan-2-one (3-benzylidene camphor) 1,7,7-三甲基-3-(苯亞甲基)雙環[2,2,1]庚-2-酮（3-亞苄基樟腦） CAS No.15087-24-8	999999	Not use	N	
385	4-tert-butylphenol 4-叔丁基苯酚 CAS No.98-54-4	999999	Not use	N	
386	Benzene-1,2,4-tricarboxylic acid 1,2-anhydride (trimellitic anhydride) 1,2,4-苯三甲酸酐 CAS No.552-30-7	999999	Not use	N	

387	Nonadecafluorodecanoic acid (PFDA) and its sodium and ammonium salts 十九氟癸酸及其鈉和銨鹽 CAS No.3108-42-7; 335-76-2; 3830-45-3	0.025	Not use	N	
388	p-(1,1-dimethylpropyl)phenol 對(1,1-二甲基丙基)苯酚 CAS No.80-46-6	999999	Not use	N	
389	Diisononyl phthalate (DINP) 鄰苯二甲酸二異壬酯 CAS No.28553-12-0;68515-48-0	999999	Not use	N	
390	Diisodecyl phthalate (DIDP) 鄰苯二甲酸二異癸酯 CAS No.26761-40-0;68515-49-1	999999	Not use	N	
401	4-Heptylphenol, branched and linear [substances with a linear and/or branched alkyl chain with a carbon number of 7 covalently bound predominantly in position 4 to phenol, covering also UVCB- and well-defined substances which include any of the individual isomers or a combination thereof] 4-庚基苯酚, 支鍊及直鍊, 包括含有7個碳烷基鏈的所有獨立的同分異構體和所有含有線性或分支7個碳烷基鏈的UVCB物質 CAS No.--	999999	Not use	N	
403	Perfluorohexane-1-sulphonic acid and its salts and related substances (PFHxS) 全氟己基磺酸及其鹽類與相關物質 CAS No. 355-46-4 ..Multiple, please check Qisda Control item list	999999	Not use	N	
408	Bis(hexachloro- cyclopenta-dieno) Cyclooctane (Dechlorane A) 雙(六氯環戊二烯)環辛烷 CAS No.13560-89-9;135821-74-8;135821-03-3	999999	Not use	N	
414	2,4,6-tris(2,4,6-tribromofenoxi)-1,3,5-triazin (TTBP-TAZ) 三(三溴苯氧基)三嗪; 三(三溴苯基)氰尿酸酯 CAS No.25713-60-4	999999	Not use	N	
435	Isopropylated triphenyl phosphate ; Tris(4-isopropylphenyl) phosphate; Phenol, isopropylated, phosphate (3:1) (PIP 3:1) 異丙基化磷酸三苯酯 CAS No.68937-41-7	999999	Not use	N	
445	Chrysene (CHR) 屈 CAS No.218-01-9	1	Not use	N	

446	Benzo(a)anthracene (BaA) 苯并蒽 CAS No.56-55-3	1	Not use	N	
447	Cadmium nitrate 硝酸鎘 CAS No.10325-94-7	999999	Not use	N	
448	Cadmium Hydroxide 氫氧化鎘 CAS No.21041-95-2	999999	Not use	N	
449	Cadmium carbonate 碳酸鎘 CAS No.513-78-0	999999	Not use	N	
450	Tricobalt tetraoxide containing ≥ 0.1% w/w nickel oxides 四氧化三鈷，其中氧化鎳含量含≥0.1%w/w CAS No.1308-06-1	999999	Not use	N	
451	Reaction products of 1,3,4-thiadiazolidine-2,5-dithione, formaldehyde and 4-heptylphenol,branched and linear (RP-HP) [with ≥0.1% w/w 4-heptylphenol, branched and linear] 1,3,4-噻二唑烷-2,5-二硫酮，甲醛和4-庚基苯酚的支鏈和直鏈（RP-HP）的反應產物[4-庚基苯酚，支鏈和直鏈含量≥0.1%w/w] CAS No.--	999999	Not use	N	
452	1,6,7,8,9,14,15,16,17,17,18,18 Dodecachloropentacyclo[12.2.1.16,9.02,13.05,10] octadeca-7,15-diene (Dechlorane PlusTM) [covering any of its individual anti- and syn-isomers or any combination thereof] 德克隆[包括所有反式和順式異構體及其組合] CAS No.135821-03-3;135821-74-8;13560-89-9	999999	Not use	N	

454	PFOA- related compounds (i)perfluorooctanoic acid, including any of its branched isomers; (ii)its salts; (iii)PFOA-related compounds which, for the purposes of the Convention, are any substances that degrade to PFOA, including any substances (including salts and polymers) having a linear or branched perfluoroheptyl group with the moiety (C7F15)C as one of the structural elements. The following compounds are not included as PFOA-related compounds: (i)C8F17-X, where X = F, Cl, Br; (ii)fluoropolymers that are covered by CF3[CF2]n-R', where R'=any group, n> 16; (iii)perfluoroalkyl carboxylic acids (including their salts, esters, halides and anhydrides) with >= 8 perfluorinated carbons; (iv)perfluoroalkane sulfonic acids and perfluoro phosphonic acids (including their salts, esters, halides and anhydrides) with >= 9 perfluorinated carbons; (v)perfluorooctane sulfonic acid and its derivatives (PFOS) . CAS No. --	999999	Not use	N	
455	Benzo[ghi]perylene 苯并[g,h,l]苝 CAS No.191-24-2	999999	Not use	N	
456	Decamethylcyclopentasiloxane (D5) 十甲基環五矽氧烷 CAS No.541-02-6	999999	Not use	N	
457	Disodium octaborate 八硼酸二鈉 CAS No.12008-41-2	999999	Not use	N	
458	Dodecamethylcyclohexasiloxane (D6) 十二甲基環六矽氧烷 CAS No.540-97-6	999999	Not use	N	
459	Ethylenediamine 乙二胺 CAS No.107-15-3	999999	Not use	N	

460	Octamethylcyclotetrasiloxane (D4) 八甲基環四矽氧烷 CAS No.556-67-2	999999	Not use	N	
461	Terphenyl hydrogenated 氫化三聯苯 CAS No.61788-32-7	999999	Not use	N	
462	Indeno(1-,2,3-cd)pyrene (IND)茚并(1,2,3-cd)芘 IND CAS No.193-39-5	999999	Not use	N	
463	Chrysene D12 氘代䓛 CAS No.1719-03-5	999999	Not use	N	
464	Benz[a]anthracene D12 氘代苯并(A)蒽 CAS No.1718-53-2	999999	Not use	N	
473	2,2-bis(4'-hydroxyphenyl)-4-methylpentane CAS No.6807-17-6	999999	Not use	N	
474	Benzo[k]fluoranthene (BkFA) 苯并[k]荧蒽 CAS No.207-08-9	1	Not use	N	
475	Fluoranthene 荧蒽 FL CAS No.206-44-0; 93951-69-0	999999	Not use	N	
476	Phenanthrene 菲 PA CAS No.85-01-8	999999	Not use	N	
477	Pyrene 芘 Pyr (C16H10) CAS No.129-00-0; 1718-52-1	999999	Not use	N	
478	Undecafluorohexanoic acid and its ammonium salt 十一氟己酸及其銨鹽 CAS No.307-24-4; 21615-47-4	999999	Not use	N	
480	Long-chain (C9-C21) PFCA(LC-PFCAs) -Perfluorocarboxylic acids that have the molecular formula CnF2n+1CO2H in which 8 ≤ n ≤ 20 (long-chain PFCA) and their salts -Compounds that consist of a perfluorinated alkyl group that has the molecular formula CnF2n+1 in which 8 ≤ n ≤ 20 and that is directly bonded to any chemical moiety other than a fluorine, chlorine or bromine atom 長鏈(C9-C21)全氟羧酸，其鹽类及其前體 CAS No. Multiple, please check Qisda Control item list	0.025	Not use	N	

481	2,3,3,3-tetrafluoro-2-(heptafluoropropoxy)propanoic acid, its salts and its acyl halides (covering any of their individual isomers and combinations thereof) 2,3,3,3-四氟-2-(七氟丙氧基)丙酸，即其鹽類與鹵化醯類(包括它們各自的異構物及其組合) CAS No.--	999999	Not use	N	
482	2-methoxyethyl acetate 2-甲氧基乙酸乙酯 CAS No.110-49-6	999999	Not use	N	
483	Tris(4-nonylphenyl, branched and linear) phosphite (TNPP) with ≥ 0.1% w/w of 4-nonylphenol, branched and linear (4-NP) 三(4-壬基苯基，支鍊和直鏈)亞磷酸酯(TNPP) (4-壬基酚4-NP，支鍊和直鏈濃度≥ 0.1%重量比) CAS No.--	999999	Not use	N	
487	Bisphenol-S (4,4'-sulphonyldiphenol) 双酚 S CAS No.80-09-1	999999	Not use	N	
489	Diundecyl phthalate (DuDP) 鄰苯二甲酸雙十一烷基酯 CAS No.3648-20-2	999999	Not use	N	
490	Tetrabromobisphenol A (TBBPA) additive and reactive CAS No.30496-13-0	999999	Not use	N	
493	Bis(2-ethylhexyl) tetrabromophthalate (TBPH or BEHTBP) covering any of the individual isomers and/or combinations thereof 雙(2-乙基己基)四溴鄰苯二甲酸酯，覆蓋任何單個異構體和/或其組合 CAS No.26040-51-7	999999	Not use	N	
495	2,3-dibromo-1-propanol (2,3-DBPA) 2,3-二溴-1-丙醇 (2,3-二溴丙醇) CAS No.96-13-9	999999	Not use	N	
496	Dibromoneopentyl glycol 二溴新戊二醇 CAS No.3296-90-0	999999	Not use	N	
499	Perfluoro carboxylic acid and related compounds (PFCAs) 全氟羧酸 CAS No. Multiple, please check Qisda Control item list	0.025	Not use	N	
507	Small Brominated Alkyl Alcohols (SBAA) 小型溴化烷基醇 CAS No. Multiple, please check Qisda Control item list	999999	Not use	N	

509	Fluorinated ethers and alcohols 氟化醚和醇類 CAS No. Multiple, please check Qisda Control item list	999999	Not use	N	
510	2-benzyl-2-dimethylamino-4'-morpholinobutyrophenone 2-苄基-2-(二甲基氨基)-4'-嗎啉基苯基丁酮 CAS No.119313-12-1	999999	Not use	N	
511	2-methyl-1-(4-methylthiophenyl)-2-morpholinopropan-1-one 2-甲基-1-(4-甲硫基苯基)-2-嗎啡基-1-丙酮 CAS No.71868-10-5	999999	Not use	N	
512	Diisohexyl phthalate 二異己基鄰苯二甲酸酯 CAS No.71850-09-4	999999	Not use	N	
513	Perfluorobutane sulfonic acid (PFBS) and its salts 全氟丁磺酸及其相關鹽類 CAS No.--	999999	Not use	N	
515	Trioctyl trimellitate (TOTM) 苯三酸三辛酯; 偏苯三酸三(2-乙基己酯) CAS No.3319-31-1	999999	Not use	N	
519	1-vinylimidazole 1-乙烯基咪唑 CAS No.1072-63-5	999999	Not use	N	
520	2-methylimidazole 2-甲基咪唑 CAS No.693-98-1	999999	Not use	N	
521	Butyl 4-hydroxybenzoate 4-羥基苯甲酸丁酯 CAS No.94-26-8	999999	Not use	N	
522	Dibutylbis(pentane-2,4-dionato-O,O')tin 二正丁基雙(乙醯丙酮基)錫 CAS No.22673-19-4	999999	Not use	N	
524	Benzo(b)fluoranthene (BbFA) 苯并(b)荧蒽 CAS No.205-99-2	1	Not use	N	
525	Benzo[j]fluoranthen (BjFA) 苯并(j)荧蒽 CAS No.205-82-3	1	Not use	N	
526	Benzo[e]pyren (BeP) 苯并(e)芘 CAS No.192-97-2	1	Not use	N	
527	Dibenzo(ah)anthracene (DBahA) 二苯并(a,h)蒽 CAS No.53-70-3	1	Not use	N	
528	Dibenzo[a,h]pyrene 二苯并(A,H)芘 CAS No.189-64-0	999999	Not use	N	

529	Dibenzo[a,i]pyrene 二苯并(A,I)芘 CAS No.189-55-9	999999	Not use	N	
530	Dibenzo[a,l]pyrene 二苯并(A,L)芘 CAS No.191-30-0	999999	Not use	N	
531	1-Methylpyrene1 1-甲基芘 CAS No.2381-21-7	999999	Not use	N	
534	Pentachlorothiophenol (PCTP) 五氯硫酚 CAS No.133-49-3	999999	Not use	N	
536	Bis(2-(2-methoxyethoxy)ethyl) ether 四乙二醇二甲醚 CAS No.143-24-8	999999	Not use	N	
537	Dioctyltin dilaurate, stannane, dioctyl-, bis(coco acyloxy) derivs., and any other stannane, dioctyl-, bis(fatty acyloxy) derivs. wherein C12 is the predominant carbon number of the fatty acyloxy moiety CAS No.3648-18-8;91648-39-4	999999	Not use	N	
538	Decabromodiphenylethane (DBDPE) 十溴二苯乙烷 CAS No.84852-53-9	999999	Not use	N	
539	1,4-Dioxane 1,4-二氧陸圜 (1,4-二惡烷) CAS No.123-91-1	999999	Not use	N	
540	Pigment Violet 29 芘艷紫紅29 CAS No.81-33-4	999999	Not use	N	
541	Methylene Chloride 二氯甲烷 CAS No.75-09-2	999999	Not use	N	
542	Carbon Tetrachloride 四氯化碳 CAS No.56-23-5	999999	Not use	N	
543	2,2-bis(bromomethyl)propane1,3-diol (BMP) 2,2-雙(溴甲基)-1,3-丙二醇; 2,2-dimethylpropan-1-ol,tribromo derivative/3-bromo-2,2-bis(bromomethyl)-1-propanol (TBNPA) 3-溴-2,2-雙(溴甲基)-1-丙醇; 2,3-dibromo-1-propanol (2,3-DBPA) 2,3-二溴-1-丙醇 CAS No.3296-90-0; 36483-57-5; 1522-92-5; 96-13-9	999999	Not use	N	

544	2-(4-tert-butylbenzyl)propionaldehyde and its individual stereoisomers ●2-(4-tert-butylbenzyl)propionaldehyde ●(2S)-3-(4-tert-butylphenyl)-2-methylpropanal ●(2R)-3-(4-tert-butylphenyl)-2-methylpropanal 2-(4-叔丁基苄基)丙醛及其個別立體異構物 CAS No.80-54-6; 75166-30-2; 75166-31-3	999999	Not use	N	
545	4,4'-(1-methylpropylidene)bisphenol; (bisphenol B) 雙酚B CAS No.77-40-7	999999	Not use	N	
546	Glutaral 戊二醛 CAS No.111-30-8	999999	Not use	N	
547	Orthoboric acid, sodium salt (group) ●Boric acid, sodium salt ●Orthoboric acid, sodium salt ●boric acid (H3BO3), sodium salt,hydrate ●Boric acid (H3BO3), sodium salt (1:1) ●Boric acid (H3BO3), disodium salt ●Trisodium orthoborate 硼酸鈉鹽(群組) CAS No.1333-73-9; 13840-56-7; 25747-83-5; 14890-53-0; 22454-04-2; 14312-40-4	999999	Not use	N	
548	Phenol, alkylation products (mainly in para position) with C12-rich branched or linear alkyl chains from oligomerisation, covering any individual isomers and/ or combinations thereof (PDDP) ●phenol, (tetrapropenyl) derivatives ●Phenol, 4-isododecyl ●Phenol, dodecyl-, branched ●4-isododecylphenol ●Phenol, tetrapropylene ●phenol, 4-dodecyl-, branched 經由低聚合反應烷基化的苯酚產物(主要在對位位置)帶有12個碳的支鏈或直鏈，並涵蓋各種同分異構物及/或其各種組合 CAS No.74499-35-7; 27147-75-7; 121158-58-5; 27459-10-5; 57427-55-1; 210555-94-5	999999	Not use	N	
549	Diisooctyl phthalate (DIOP), 1,2-Benzenedicarboxylic acid, diisooctyl ester 鄰苯二甲二異辛酯 CAS No.27554-26-3	999999	Not use	N	
550	Dimethyl phthalate (DMP) 鄰苯二甲酸二甲酯 CAS No.131-11-3	999999	Not use	N	

551	Specified PAHs (FL,PA,Pyr,Anthracene) 特定多環芳香族烴(FL,PA,Pyr,Anthracene) CAS No.206-44-0; 85-01-8; 129-00-0; 120-12-7	999999	Not use	N	
552	Methoxychlor 甲氧基氯 CAS No.72-43-5	999999	Not use	N	
553	1,3-Butadiene 1,3-丁二烯 CAS No.106-99-0	999999	Not use	N	
554	1,1-Dichloroethane 1,1-二氯乙烷 CAS No.75-34-3	999999	Not use	N	
555	Trans-1,2-dichloroethene 反-1,2-二氯乙烯 CAS No.156-60-5	999999	Not use	N	
556	1,2-Dichloropropane 1,2-二氯丙烷 CAS No.78-87-5	999999	Not use	N	
557	Ethylene dibromide 1,2-二溴乙烷 CAS No.106-93-4	999999	Not use	N	
558	1,3,4,6,7,8-Hexahydro-4,6,6,7,8,8-hexamethylcyclopenta[g]-2-benzopyran (HHCB) 1,3,4,6,7,8-六氫-4,6,6,7,8,8,-六甲基-環戊並[g]苯並吡喃 CAS No.1222-05-5	999999	Not use	N	
559	Phthalic anhydride 苯酐 CAS No.85-44-9	999999	Not use	N	
560	1,1,2 Trichloroethane 1,1,2-三氯乙烷 CAS No.79-00-5	999999	Not use	N	
567	6,6'-di-tert-butyl-2,2'-methylenedi-p-cresol (DBMC) 6,6'雙二叔丁基-2,2'-亞甲基雙對甲酚 CAS No.119-47-1	999999	Not use	N	
568	S-(tricyclo[5.2.1.0'2,6]deca-3-en-8(or 9)-yl) O-(isopropyl or isobutyl or 2-ethylhexyl) O-(isopropyl or isobutyl or 2-ethylhexyl) phosphorodithioate 硫-(三環[5.2.1.0'2,6]癸-3-烯-8(或9)-基) 氧-(異丙基或異丁基或2-乙基己基) 氧-(異丙基或異丁基或2-乙基己基)二硫代磷酸酯 CAS No.255881-94-8	999999	Not use	N	
569	tris(2-methoxyethoxy)vinylsilane 三(2-甲氧基乙氧基)乙烯基矽烷 CAS No.1067-53-4	999999	Not use	N	

570	(±)-1,7,7-trimethyl-3-[(4-methylphenyl)methylene]bicyclo[2.2.1]heptan-2-one covering any of the individual isomers and/or combinations thereof (4-MBC) (±)-1,7,7-三甲基-3-[(4-甲基苯基)亞甲基]二環[2.2.1]庚烷-2-酮，包括各個異構體和/或其組合 CAS No.--	999999	Not use	N	
572	Perfluorohexanoic acid (PFHxA) and its salts and related substances (APFHx) 全氟己酸(PFHxA)及其銨鹽(APFHx) CAS No. --	999999	Not use	N	
573	Resorcinol /1,3-benzenediol 間苯二酚 CAS No. 108-46-3	999999	Not use	N	
574	Amitrole (Triazol-3-amine) 3-氨基-1,2,4-三氮唑 CAS No.61-82-5	999999	Not use	N	
575	Iprodione 異菌脲 CAS No.36734-19-7	999999	Not use	N	
576	Diisocyanates 二異氰酸酯類 CAS No. Multiple, please check Qisda Control item list	999999	Not use	N	
577	(4-Chlorophenyl) cyclopropylmethanone, O-[(4- nitrophenyl)methyl] oxime 4-氯苯基丙基甲酮 CAS No.6640-25-1	999999	Not use	N	
585	N-(hydroxymethyl)acrylamide N-羥甲基丙烯醯胺 CAS No. 924-42-5	999999	Not use	N	
588	(for packing/Printed matter material only) Mineral oil aromatic hydrocarbons (MOAH) comprising 1 to 7 aromatic rings 此項只適用包材和印刷品中的礦物油MOAH碳氫化合物 1 到 7 芳香環含量	1000	Not use	N	
589	(for packing/Printed matter material only) Mineral oil aromatic hydrocarbons (MOAH) comprising 3 to 7 aromatic rings 此項只適用包材和印刷品中的礦物油MOAH碳氫化合物 3 到 7 芳香環含量	1	Not use	N	
590	(for packing/Printed matter material only) Mineral oil saturated hydrocarbons (MOSH) with 16 to 35 carbon atoms 此項只適用包材和印刷品中的礦物油 含 16 至 35 個碳原子的礦物油飽和烴(MOSH)	1000	Not use	N	

591	1,1'-[ethane-1,2-diylbisoxy]bis[2,4,6-tribromobenzene] 1,2-雙(2,4,6-三溴苯氧基)乙烷 CAS No. 37853-59-1	999999	Not use	N	
592	Barium diboron tetraoxide 偏硼酸鋇 CAS No. 13701-59-2	999999	Not use	N	
593	Isobutyl 4-hydroxybenzoate 4-羥基苯甲酸 2-甲基丙酯 CAS No. 4247-02-3	999999	Not use	N	
594	Melamine 三聚氰胺 CAS No. 108-78-1	999999	Not use	N	
595	Perfluoroheptanoic acid and its salts 全氟庚酸及其鹽類 CAS No. 6130-43-4;21049-36-5;375-85-9;20109-59-5	999999	Not use	N	
596	reaction mass of 2,2,3,3,5,5,6,6-octafluoro-4-(1,1,1,2,3,3,3-heptafluoropropan-2-yl)morpholine and 2,2,3,3,5,5,6,6-octafluoro-4-(heptafluoropropyl)morpholine 2,2,3,3,5,5,6,6-八氟-4-(1,1,1,2,3,3,3-七氟丙烷-2-基)嗎啉和2,2,3,3,5,5,5,6,6-八氟烷-4-(七氟丙基)嗎啉的反應物料 CAS No. --	999999	Not use	N	
603	Reporting PFAS (substances that contain at least one fully fluorinated methyl (CF3 -) or methylene (-CF2 -) carbon atom (without any H/Cl/Br/I atom attached to it).) 任何含有至少一個完全氟化的甲基 (CF3-) 或亞甲基 (-CF2-) 碳原子（不含任何 H/Cl/Br/I 連接）的PFAS物質	999999	Not use	N	
604	bis(4-chlorophenyl) sulphone 4,4'-二氯二苯基碸 CAS No.80-07-9	999999	Not use	N	
605	Diphenyl(2,4,6-trimethylbenzoyl)phosphine oxide) (2,4,6-三甲基苯甲酰基)二苯基氧化膦 CAS No.75980-60-8	999999	Not use	N	
606	2-(2H-benzotriazol-2-yl)-4-(1,1,3,3-tetramethylbutyl)phenol 2-(2H-苯並三唑-2-基)-4-(1,1,3,3-四甲基丁基)苯酚 (紫外線吸收劑329) CAS No. 3147-75-9	999999	Not use	N	

607	2-(dimethylamino)-2-[(4-methylphenyl)methyl]-1-[4-(morpholin-4-yl)phenyl]butan-1-one 2-二甲氨基-2-(4-甲基)苄基-1-[4-(4-嗎啉基)苯基]-1-丁酮 CAS No. 119344-86-4	999999	Not use	N	
608	Bumetrizole 2-(5-氯-2-苯三唑基)-6-叔丁基-4-甲基苯酚 (紫外線吸收劑326) CAS No. 3896-11-5	999999	Not use	N	
609	Oligomerisation and alkylation reaction products of 2-phenylpropene and phenol 2-苯基丙烯與苯酚的低聚合烷基化反應物 CAS No. --	999999	Not use	N	
611	Bis(α,α-dimethylbenzyl) peroxide 過氧化二異丙苯 CAS No. 80-43-3	999999	Not use	N	
619	reaction mass of: triphenylthiophosphate and tertiary butylated phenyl derivatives 三苯基硫代磷酸與叔丁基苯衍生物的反應物 CAS No. 192268-65-8	999999	Not use	N	
620	Perfluamine 全氟三丙胺 CAS No. 338-83-0	999999	Not use	N	
621	Octamethyltrisiloxane 八甲基三矽氧烷 CAS No. 107-51-7	999999	Not use	N	
622	O,O,O-triphenyl phosphorothioate 硫代磷酸(O,O,O-三苯基)酯 CAS No. 597-82-0	999999	Not use	N	
623	6-[(C10-C13)-alkyl-(branched, unsaturated)-2,5-dioxopyrrolidin-1-yl]hexanoic acid 6-[(C10-C13)-烷基-(支鏈，不飽和)-2,5-二氧代吡咯烷-1-基]己酸 CAS No. 2156592-54-8	999999	Not use	N	
624	1,1,1,3,5,5,5-heptamethyl-3-[(trimethylsilyl)oxy]trisiloxane 1,1,3,5,5,5-七甲基-3-[(三甲基矽基)氧基]三矽氧烷 CAS No. 17928-28-8	999999	Not use	N	
625	Decamethyltetrasiloxane 十甲基四矽氧烷 CAS No. 141-62-8	999999	Not use	N	

626	tetra(sodium/potassium) 7-[(E)-{2-acetamido-4-[(E)-(4-{[4-chloro-6-({2-[(4-fluoro-6-{[4-(vinylsulfonyl)phenyl]amino}-1,3,5-triazine-2-yl)amino]propyl}amino)-1,3,5-triazine-2-yl]amino}-5-sulfonato-1-naphthyl)diazenyl]-5-methoxyphenyl}diazenyl]-1,3,6-naphthalenetrisulfonate; Reactive Brown 51 活性棕 51 CAS No. --	999999	Not use	N	