<FRONT VIEW>

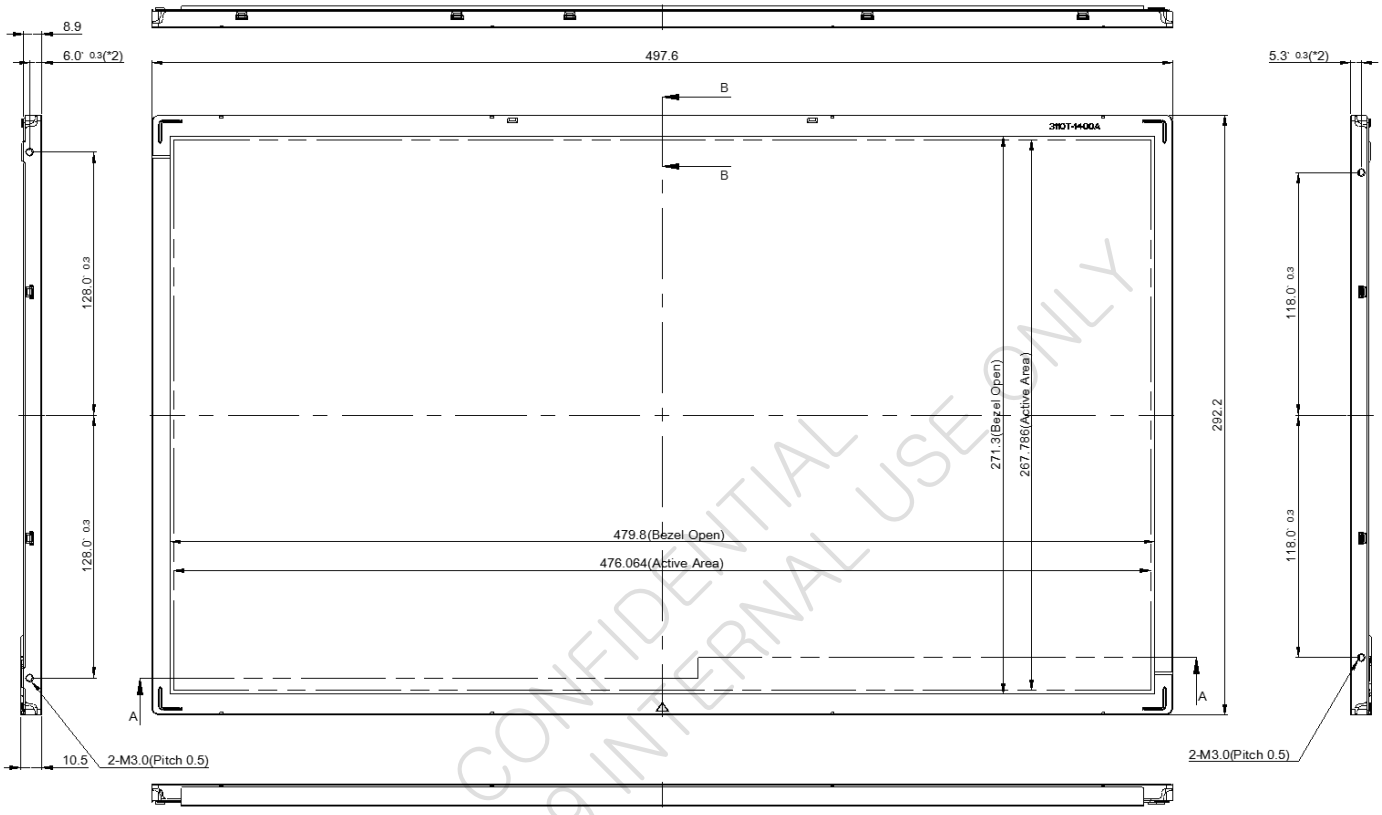

CONFIDENTIAL
2019/11/19 INTERNAL USE ONLY

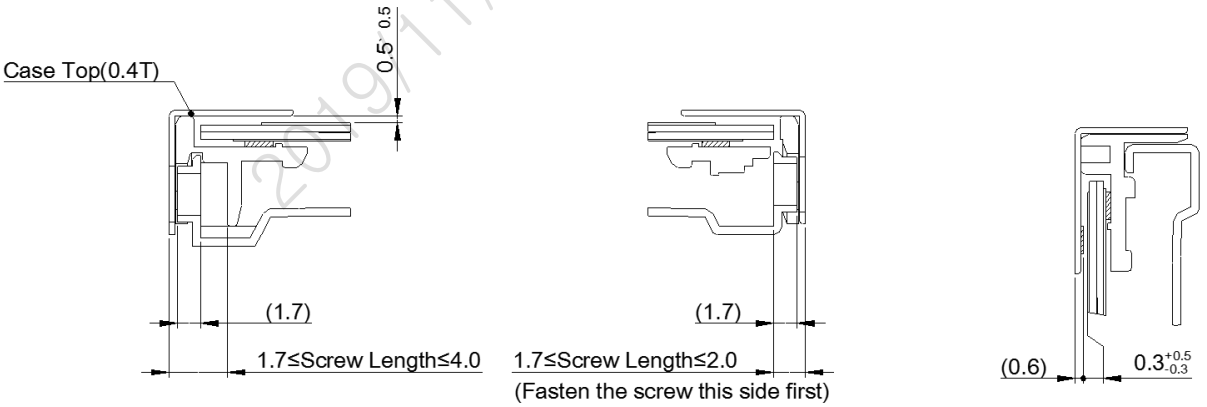

SECTION A-A
SCALE 2/1

SECTION B-B
SCALE 2/1

<REAR VIEW>

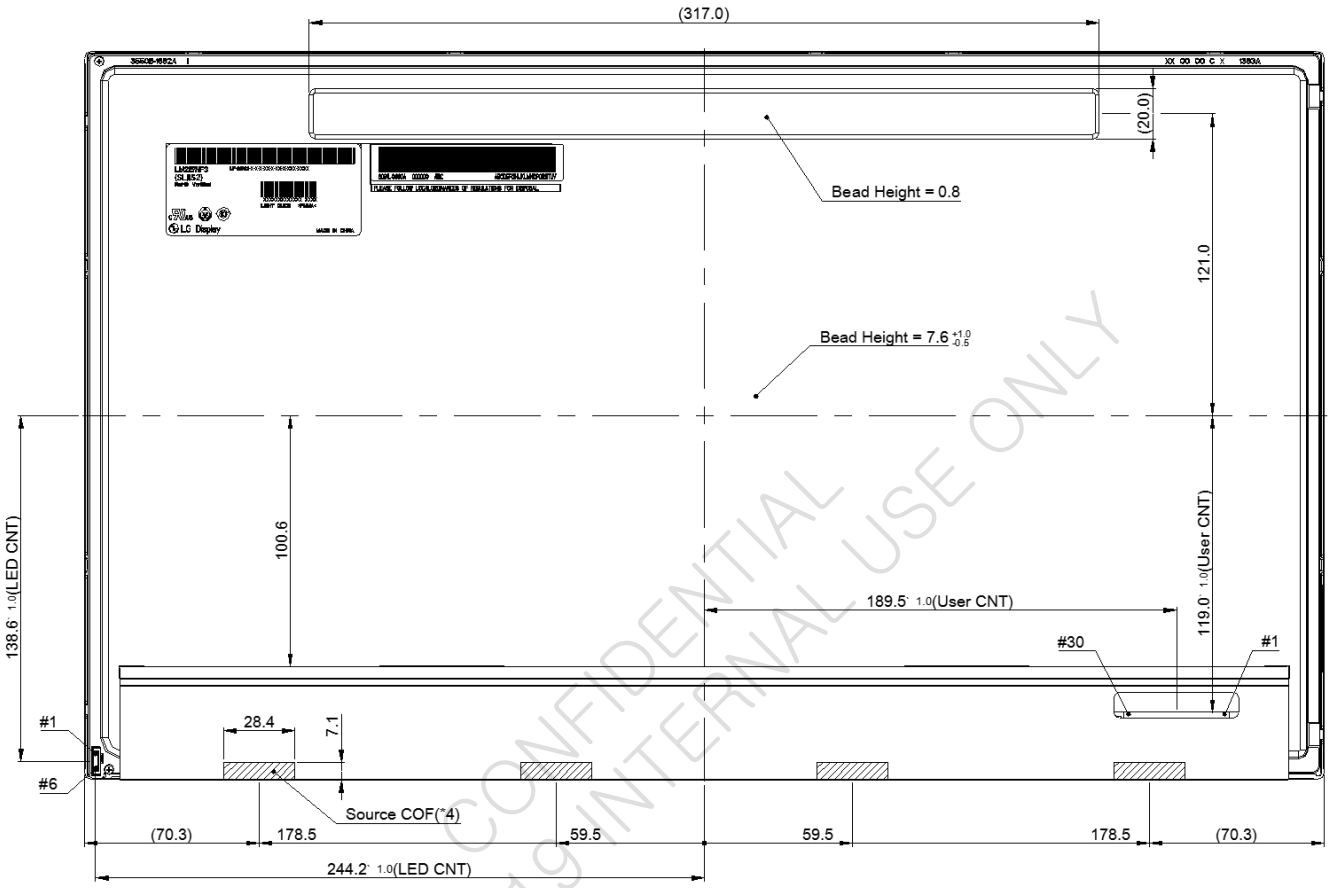

CONFIDENTIAL
2019/11/19 INTERNAL USE ONLY

Notes
1. Unspecified tolerances are to be ± 0.5
2. Tilt and partial disposition tolerance of display area are as following.
   (1) Y-direction : I A-B I ≤ 1.0
   (2) X-direction : I C-D I ≤ 1.0

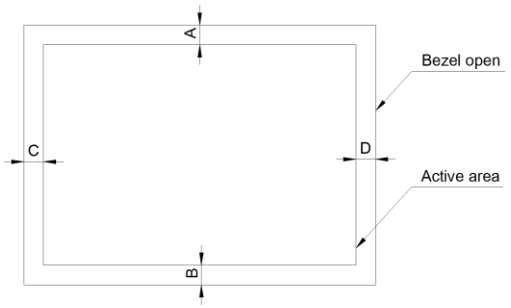

3. Torque of User Hole(Mount) : 3.0 ~4.0kgf.cm
4. I/F Connector Specification : IS100-L300-C23(UJU)
5. LED Connector Specification : 10035WR=H06D(HF)
6. The COF area is weak & sensive, so please don't press the COF area

LGD Highly recommendation :

As The IPS panel is sensitive & slim, please recommend the metal frame of the system supports the panel by the double side-mount.