







設計驗證
工程課
2026 -05- 08
發行







設計驗證
工程課
2026 -05- 08
發行





設計驗證
工程課
2026 -05- 08
發行

鎰勝工業股份有限公司

I-SHENG ELECTRIC WIRE & CABLE CO., LTD.

APPROVAL SHEET

客戶 **CUSTOMER**	鈺緯
品名 **STYLE NAME**	**POWER SUPPLY CORD**
規格 **MODEL NO.**	**SP-301+IS-14** 台規 **VCTF 300V 3X1.25mm² 凹字 CT-12(BLACK) 1830mm**
客戶料號 **PART NO.**	**3KP00003300**(K0936)

鎰勝料號 **IS PART NO.**	發行日期 **ISSUED DATE**	版本 **VERSION**
V35CD3T6V1218302	**2025/10/29**	**A01**

■ 鎰勝工業股份有限公司 **I-SHENG ELECTRIC WIRE & CABLE CO., LTD.**
台灣省桃園市龜山區大崗里頂湖路 **50** 號
50, Tin Hwu Road, Ta Gann Village, Gwai San Hsian, Tao Yuan Hsien, Taiwan 33378
TEL:886-3-3282391 FAX:886-3-3284228

■ 鎰勝電子(深圳)有限公司 **I-SHENG MANUFACTURING(SONG GANG)FACTORY**
廣東省深圳市寶安區松崗街道塘下湧大道旁第一幢
Building 1, TangXiaYong Street, Songgang Town, Bao'An District, Shenzhen, Guangdong, China 518105
TEL:86-755-33876988 FAX:86-755-33876800

■ 鎰勝電子科技(昆山)有限公司 **I-SHENG ELECTRONICS (KUNSHAN) CO., LTD.**
江蘇省昆山市經濟技術開發區泰山路 **888** 號
No. 888 Tai Shan Road, Kunshan Development Zone, Kun Shan City, Jiang Su Province, China 215300
TEL:86-512-57386890 FAX:86-512-57386891

■ 鎰勝工業(越南)有限公司 **I-SHENG ELECTRIC WIRE & CABLE (VIETNAM)**
越南北寧省北寧市雲陽坊桂武工業區
Que Vo I.P, Van Duong ward, Bac Ninh city, Bac Ninh province, Vietnam 0222
TEL: 84-222-3634237 FAX: 84-222-3634436

Approved by	Checked by	Prepared by	Customer Approval
陳永鎮	劉宗科	洪素婉	設計驗證 工程課 2026 -05- 08 發行 鈺緯科技開發股份有限公司

◎◎◎◎◎ **Please sign back this cover page after your approval** ◎◎◎◎◎

I-SHENG ELECTRIC WIRE & CABLE CO., LTD.

工程變更通知單(ECN)

日期 Date: 2025/7/10		ECN No: 25ECNA30
變更機種(model change): CNS CABLE	變更原因(change reasons): ☐ 降低成本(cost down) ☐ 製程需要(production process) ☐ 規格變更(spec revised)	☐ 客戶需求 (customer requirement) ■ 安規變更 (Safety change) ☐ 更換材料(material change) ☐ 其他(other)：
客戶(Customer) : All	變更內容(change content):	台規 CNS 線材 增加 額定電壓
影響料號 (Effected model list):	庫存 (In stock)	

變更原因(change reason)

標檢局 110 年度之一致性會議中，其中有一個議題有提及額定電壓必須依據 “電器及電子商品標示基準” 規定辦理，也就是電線產品必須於本體標示額定電壓。

新送樣/承認的樣品，將會使用新台規印字，預計 2026 年底全面切換完成

In the 110th Conformance Meeting of the BUREAU OF STANDARDS, one of the topics mentioned that the rated voltage must be handled in accordance with the "Marking Standards for Electrical and Electronic Goods", that is, the rated voltage of wire products must be marked on the body.

The newly submitted/recognized samples will be printed with the rated voltage, and it is expected that the full altered will be completed by the end of 2026.

變更前(Before change)	變更後(After change)
I-SHENG VCTF 3X0.75 mm^2 20XX ⊖R41048 RoHS	I-SHENG VCTF 300V 3X0.75 mm^2 20XX ⊖ R41048 RoHS
I-SHENG VCTF 3X1.25 mm^2 20XX ⊖R41048 RoHS	I-SHENG VCTF 300V 3X1.25 mm^2 20XX ⊖ R41048 RoHS
I-SHENG VCTF 3X2.0 mm^2 20XX ⊖R41048 RoHS	I-SHENG VCTF 300V 3X2.0 mm^2 20XX ⊖ R41048 RoHS
Factory identification : NON	
預定實施日期(Effectuated date)：	客戶確認(Customer approval)
即日起	

Approved by	Checked by	Prepared by
Tsen Chen	TK Liu	Vivian Hung

檔　　號：
保存年限：

抄件

經濟部標準檢驗局　書函

機關地址：10051臺北市中正區濟南路1段4號
聯 絡 人：吳昌圖
聯絡電話：（02）86488058-259
電子郵件：ct.wu@bsmi.gov.tw
傳　　真：（02）86489256

受文者：經濟部標準檢驗局第六組電氣檢驗科

發文日期：中華民國111年1月13日
發文字號：經標六字第11160000860號
速別：普通件
密等及解密條件或保密期限：
附件：

主旨：110年12月份「電氣商品檢測技術一致性研討會」會議紀錄，業已公布於本局商品檢驗業務專區電子佈告網頁，請自行於（https://www.bsmi.gov.tw/wSite/lp?ctNode=8850&xq_xCat=b&mp=1）網址下載參閱，請查照。

正本：臺灣區照明燈具輸出業同業公會、台灣區冷凍空調工程工業同業公會、財團法人台灣大電力研究試驗中心、財團法人精密機械研究發展中心、財團法人台灣商品檢測驗證中心、財團法人金屬工業研究發展中心（臺中）、經濟部標準檢驗局基隆分局、經濟部標準檢驗局新竹分局、經濟部標準檢驗局臺中分局、經濟部標準檢驗局臺南分局、經濟部標準檢驗局高雄分局

副本：

電氣商品檢測技術一致性研討會會議紀錄

開會時間：110 年 12 月 10 日（五）上午 9 時 30 分
開會地點：本局汐止電氣檢驗科技大樓簡報室
主 持 人：白簡任技正玠臻
出席人員：詳如簽名冊
紀　　錄：吳昌圖
宣導事項：

一、本局第六組

（一）依據本局政風室 100 年 5 月 5 日簽核內容辦理：
建請第六組於檢驗一致性會議內容註明「本局相關法規法律位階高於檢驗一致性會議，檢驗一致性會議僅係補強與釋示作用」。

（二）本局各單位及本局指定試驗室於電氣商品檢測技術一致性研討會所提出的議題，其內容引用到廠商技術文件、電路圖、產品照片・・・等等，應先取得廠商同意書，避免本局將其議題及結論內容公布在本局網站時，侵犯到廠商的智慧財產權。

二、本局第三組

（一）依 110 年 6 月 24 日經標三字第 11030003190 號公告**修正**「應施檢驗電風扇商品等 7 項商品之相關檢驗規定」，請自行於（https://www.bsmi.gov.tw/wSite/public/Data/f1624858610037.pdf）網址下載參閱。

（二）依 110 年 9 月 23 日經標三字第 11030005970 號公告**訂定**「應施檢驗織物蒸汽機商品之相關檢驗規定」，請自行於（https://www.bsmi.gov.tw/wSite/public/Data/f1632735577709.pdf）網址下載參閱。

（三）依 110 年 11 月 16 日經標三字第 11030007200 號公告**修正**「應施檢驗空氣清淨機電器商品之相關檢驗規定」，請自行於（https://www.bsmi.gov.tw/wSite/public/Data/f1637043221402.pdf）網址下載參閱。

（四）依 110 年 11 月 17 日經標三字第 11030007650 號公告**修正**「應施檢驗微波爐商品之相關檢驗規定」，請自行於（https://www.bsmi.gov.tw/wSite/public/Data/f1637134354068.pdf）網址下載參閱。

（五）為確保產品安全，對於附有電源開關之轉接器、延長線及插座類等產品，各相關指定試驗室應確認其電源開關能切斷所有火線。

（六）有關電線標示部分，因「電器及電子商品標示基準」有明定零組件及耗材要於本體上標示「額定電壓」，雖部分電線類公告標準未規定要標示額定電壓，惟仍請各廠商依「電器及電子商品標示基準」規定辦理。各相關指定試驗室應確認電線類商品有依該基準於本體標示額定電壓。

NO.	BOM ITEM	QUANTITY	PART NO.
1	ø4.75 銅管	1 PCS	BPN47500
2	KDF-50T 銅片	2 PCS	BBN50T02
3	SP-301B 內模	1 PCS	MI301B01
4	PVC 30P (SP-301) CT-12	25.5 g	RPP03012
5	KPR-14 銅片	3 PCS	BBB14000
6	IS-14 內模套	1 PCS	MI014000
7	PVC 50P (IS-14) CT-12	20 g	RPP05012
8	紅一點環保袋 26CM	1 PCS	KPR11026

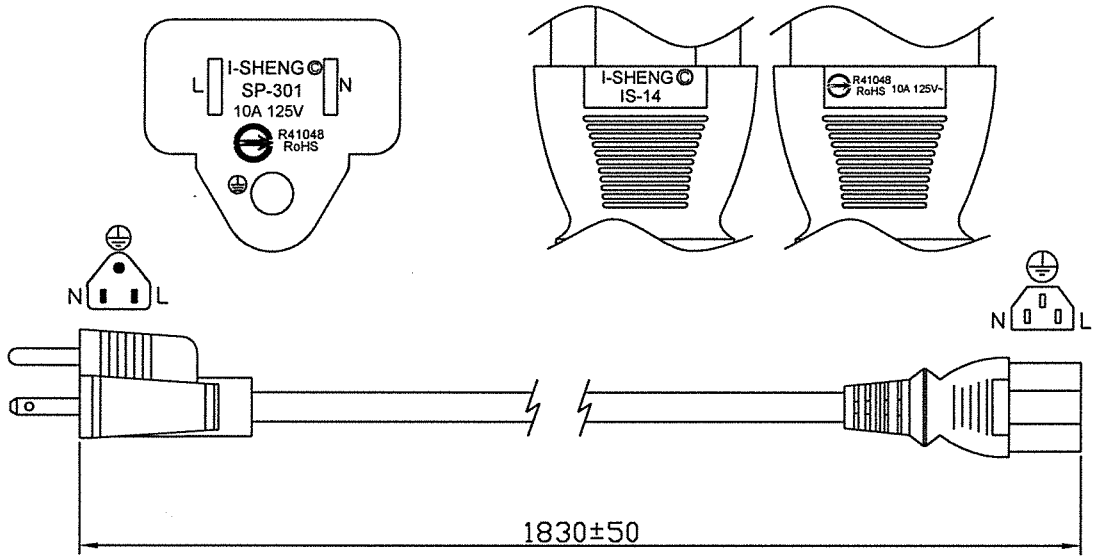

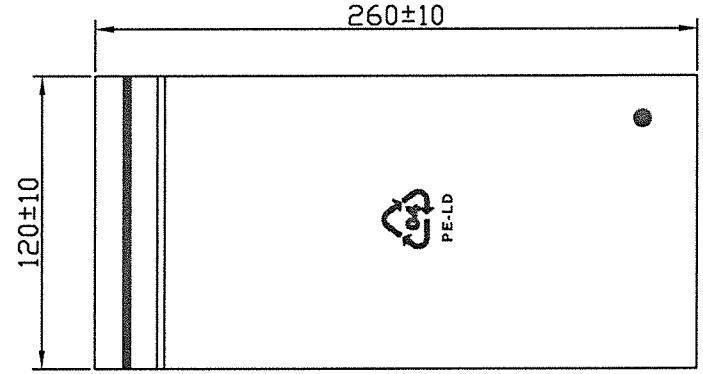

環保袋 (PE BAG)

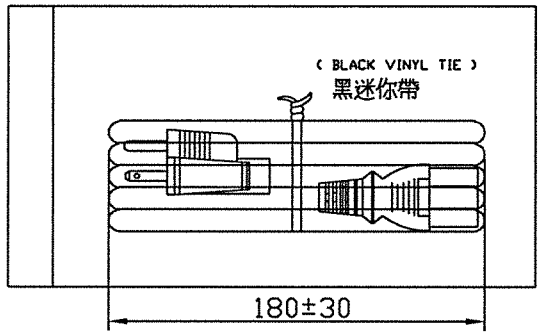

設計驗證 工程課 2026-05-08 發行

MANUFACTURER	□ TWIS □ SGIS □ KSIS			
CORD	VCTF 300V 3X1.25 CNS 凹字 CT-12(BLACK)			
PLUG	SP-301 + IS-14(CNS)	WIRE LENGTH	1830	
CUSTOMER NAME	鈺緯 (K0936)	UNIT	mm	REV.
CUSTOMER PART NO	3KP00003300	DWG. NO.	S114416	A

I-SHENG ELECTRIC WIRE & CABLE CO.,LTD.
鎰勝工業股份有限公司

DESIGN BY	洪素婉 2025.10.17
REVIEW BY	
APPROVE BY	陳永鎮 2025.10.17

V35 CD3T6V 12 183 02

WIRING COLOR:
E: Green 綠
N: White 白
L: Black 黑

線材印字:(918-16V)
I-SHENG VCTF 300V 3X1.25mm² 20XX ⊖ R41048 RoHS

FORM:I101c

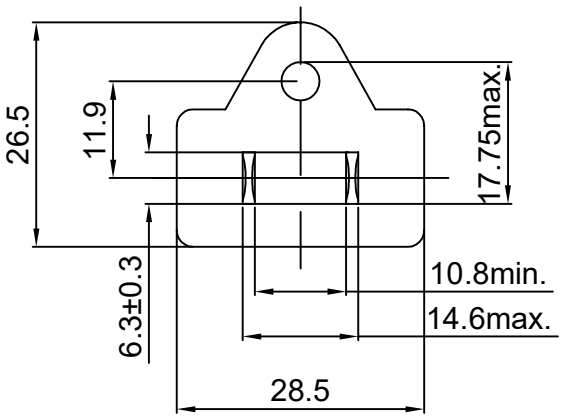

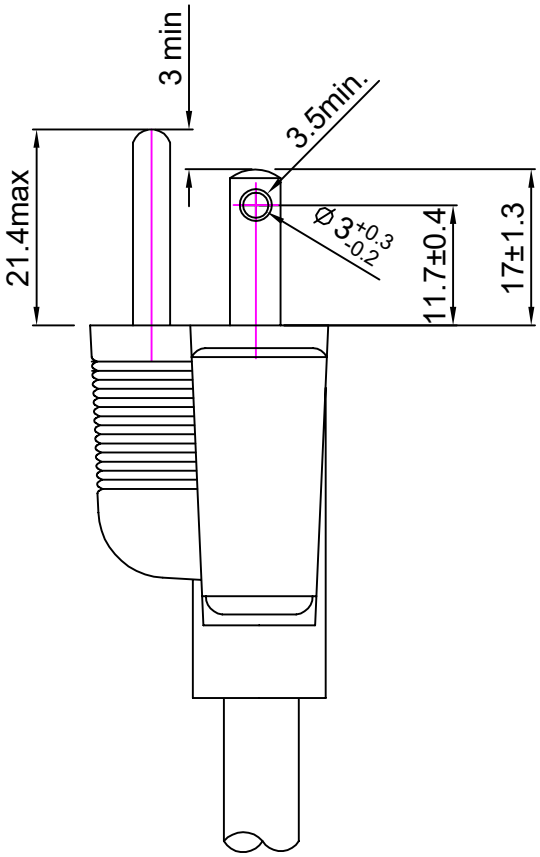

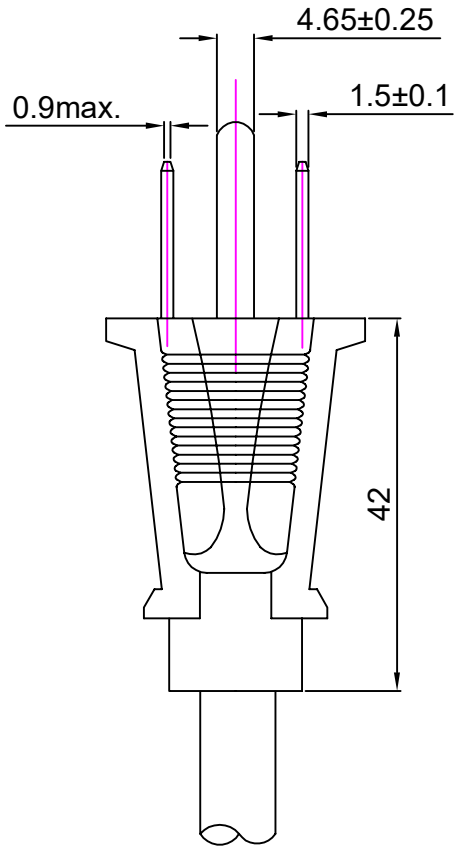

DWG. NAME	TYPE AND DIMENSIONS		
APPLY TO STANDARD	TAIWAN APPROVAL POWER SUPPLY CORD		
ISSUE DATE	2017/11/24	REV.	C
REVISE DATE	2025/8/29	UNIT	mm
TYPE	SP-301	DWG. NO.	D01-08
WIRE	(H)VCTF 3X1.25		
I-SHENG ELECTRIC WIRE & CABLE CO.,LTD. 鎰勝工業股份有限公司		DESIGN BY	VIVIAN HUNG
		REVIEW BY	Sam Chou
		APPROVE BY	Tsen Chen

TOLERANCE	
≤ 1.0	±0.3
≤ 10.0	±0.5
≤ 20.0	±1.0
> 20.0	±2.0

FORM : I106a

MARKING

發行 ISSUED 2025.8.29	標準名稱 STD. NAME	TAIWAN APPROVAL POWER SUPPLY CORD	編號 FILE NO. D01-08-1
修訂 REVISED A	品名 CAT NO.	SP-301 成品標識示意圖	頁次 PAGE 1

TAIWANN FACTORY：

SHENZHEN FACTORY： Ⓒ

KUNSHAN FACTORY： Ⓚ

VIETNAM FACTORY： Ⓥ

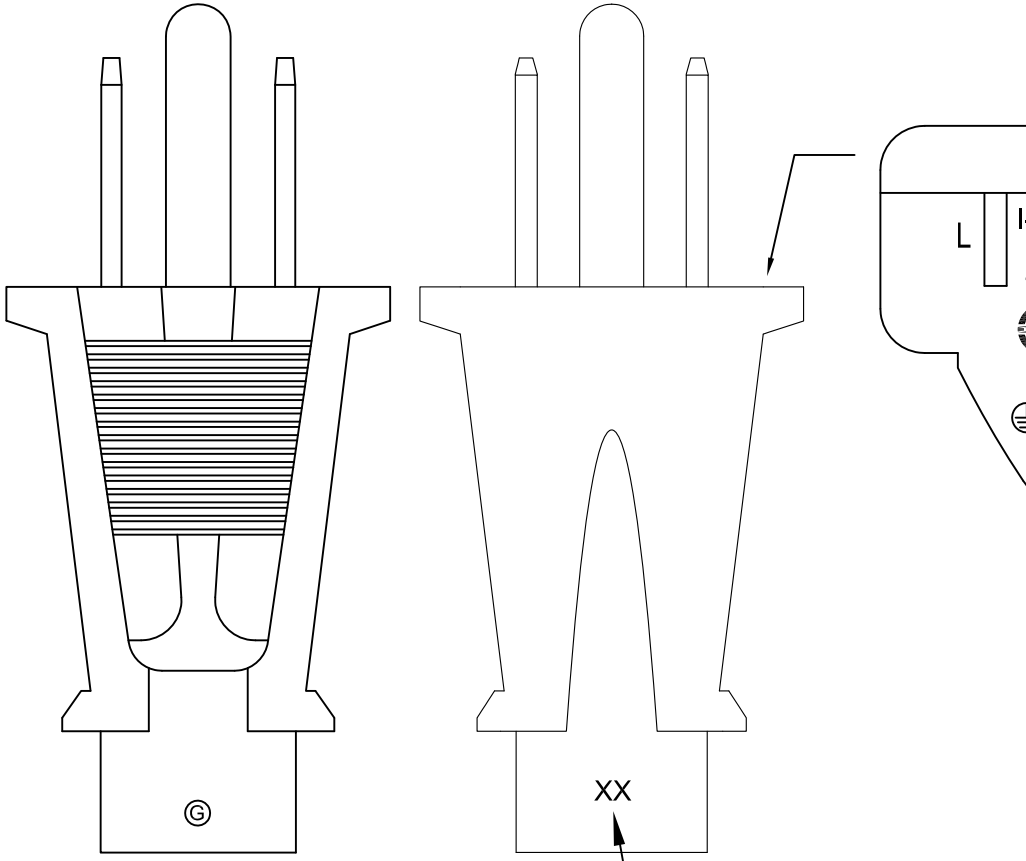

I-SHENG ELECTRIC WIRE & CABLE CO.,LTD.	製圖	洪素婉	審查	劉宗科	核准	陳永鎮

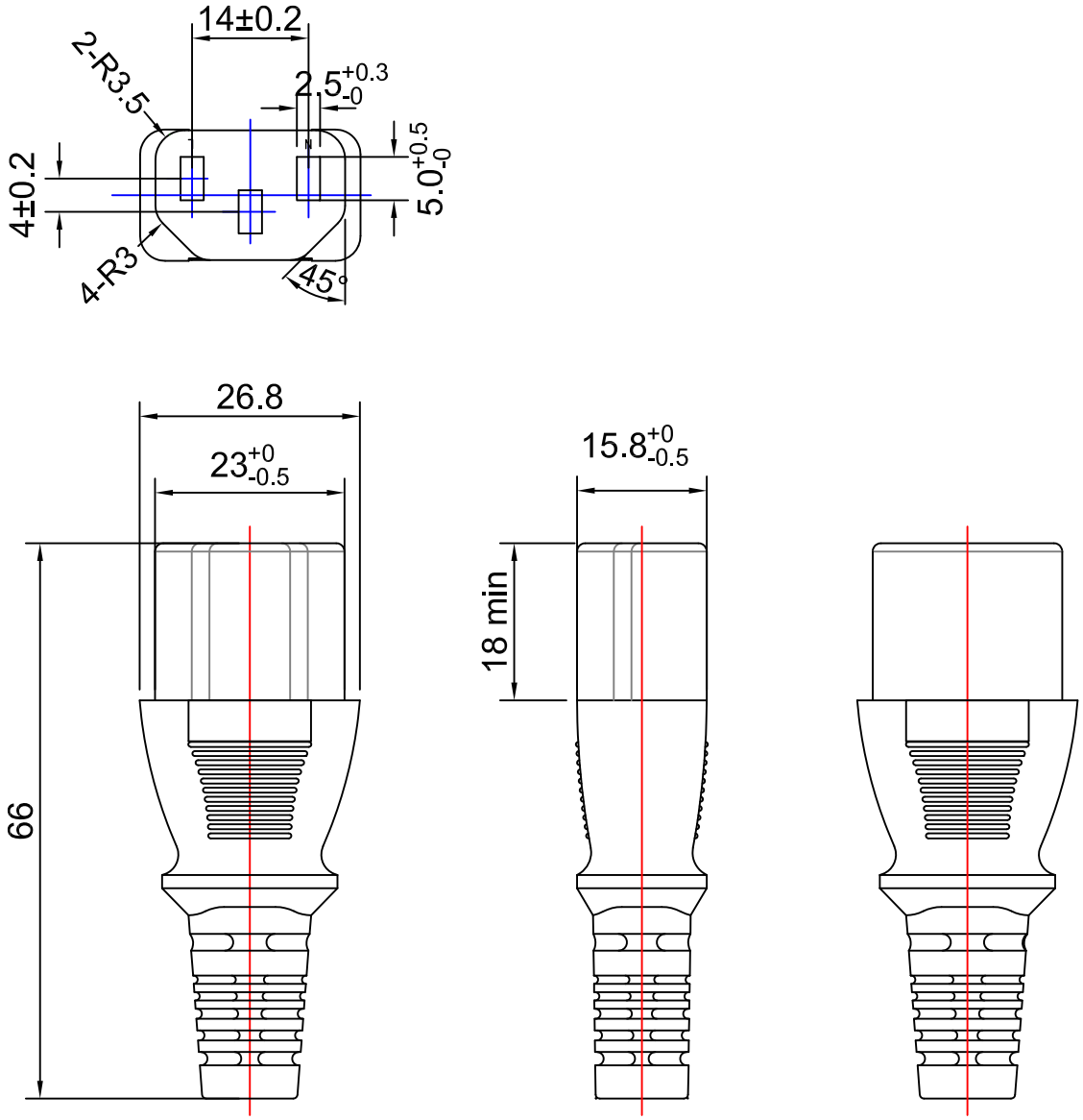

DWG. NAME	TYPE AND DIMENSIONS			
APPLY TO STANDARD	BSMI APPROVAL POWER SUPPLY CORD			
ISSUE DATE	2004/08/05	REV.	D	
REVISE DATE	2017/08/31	UNIT	mm	
TYPE	IS-14	DWG. NO.	L14-31	
WIRE	(H)VCTF 3X0.75~3X2.0			
I-SHENG ELECTRIC WIRE & CABLE CO.,LTD. 鎰勝工業股份有限公司		DESIGN BY	VIVIAN HUNG	
		REVIEW BY	FANNY WANG	
		APPROVE BY	RYAN LAI	

TOLERANCE	
≤ 1.0	±0.3
≤ 10.0	±0.5
≤ 20.0	±1.0
> 20.0	±2.0

FORM : I106a

MARKING

發行 ISSUED 2025.9.1	標 準 名 稱 STD. NAME	TAIWAN APPROVAL POWER SUPPLY CORD	編號 FILE NO. L14-31-2
修訂 REVISED A	品 名 CAT NO.	IS-14 成品標識示意圖	頁次 PAGE 1

TAIWANN FACTORY：

SHENZHEN FACTORY： Ⓒ

KUNSHAN FACTORY： Ⓚ

VIETNAM FACTORY： Ⓥ

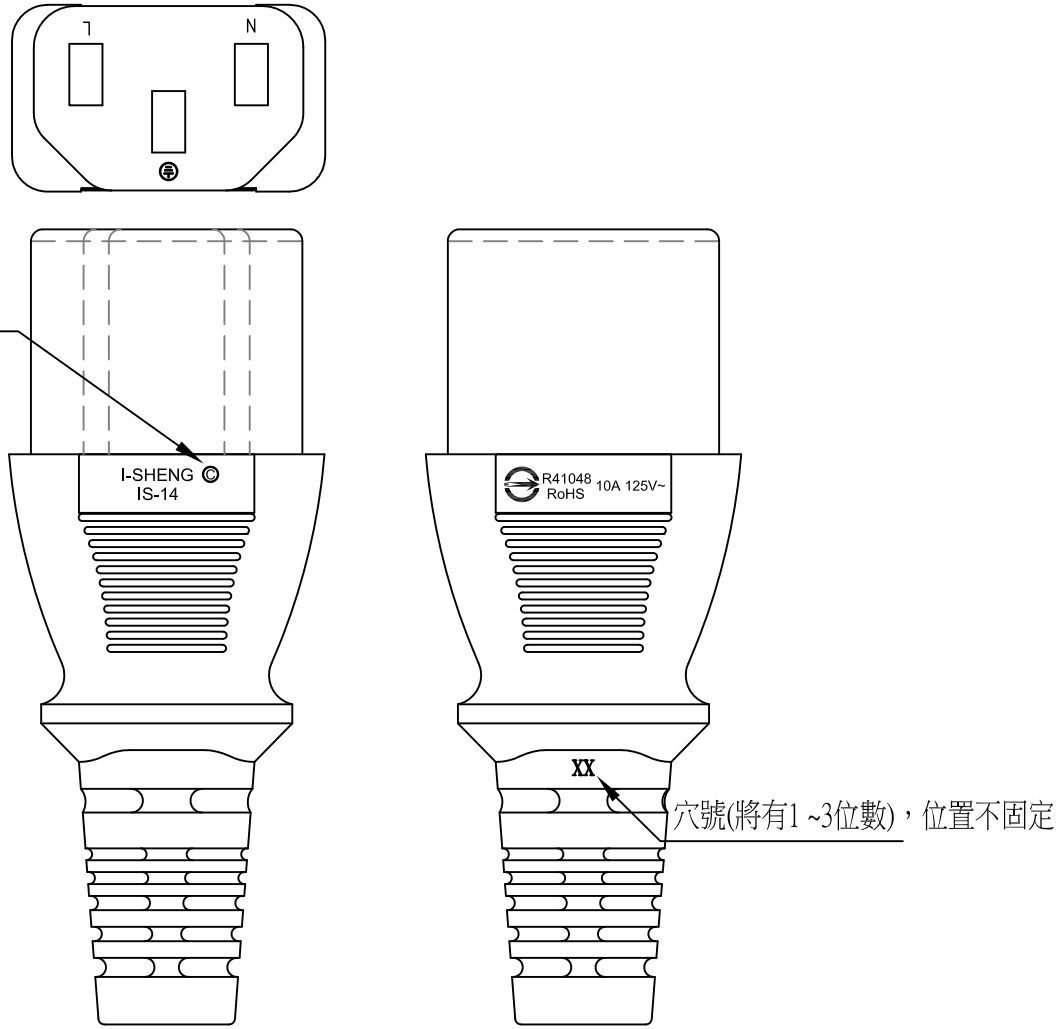

I-SHENG ELECTRIC WIRE & CABLE CO.,LTD.	製圖	洪素婉	審查	劉宗科	核准	陳永鎮

SPECIFICATION

Rev. 1.0

Issued	2024/12/25	Description	File No.	V35CD3T6V
Revised		SP-301+IS-14 VCTF 3X1.25mm²	Page	1/1

1. Scope :

This specification is applied to power supply cord conforming to:

CNS 15767-1 IEC 60320-1 CNS 690 CNS 3199 CNS15663 CNS 60799

2. Construction and dimensions:

In accordance with the following tables and attached drawings.

Item	Cat. No.	Rating		Approved No.
		A	V	
Plug	SP-301	10	125	As attachment
Connector	IS-14	10	125	As attachment

Flexible cord					VCTF 3X1.25mm²			
Approved No.					As attachment			
Rating					300V 60℃			
Conductor		Insulation			Jacket			Conductor Resistance
Nominal (mm^2) (AWG)	Composition (pcs/mm)	Avg. Thickness (mm)	Min Thickness (mm)	Diameter (mm)	Avg. Thickness (mm)	Min Thickness (mm)	Diameter	Max 15.1Ω/km at 20℃ In case of dispute, Conductor resistance shall be the referee method.
1.25	50/ϕ0.18±0.008	0.54	0.48	ϕ2.70±0.1	0.90	0.70	ϕ7.80±0.2	

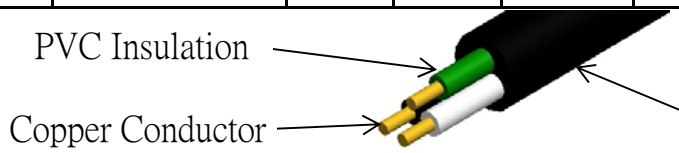

Insulation Color
Black
White
Green

3. Cable marking on the sheath:

I-SHENG VCTF 300V 3X1.25mm² 20XX R41048 RoHS

20XX: Year of production

I-SHENG ELECTRIC WIRE & CABLE CO., LTD.

發行 ISSUED 2000.03.05	標準名稱 STD.NAME	SPECIFICATION	檔案編號 FILE NO
修訂 REVISED 2017.11.23	題目 TITLE	THE CHARACTERISTIC OF POWER SUPPLY CORD FOR TAIWAN	SPEC-CNS

Items 項目		Conditions 條件		Specification 規格
1	Insulation resistance 絕緣抵抗	Apply a voltage of 500V DC for 1 min at an ambient temperature of 20℃, after which measurement shall be made.	Between two conductors 導體相互間	100MΩ or more 以上
			Between a conductor and ground 導體大地間	
2	Electric strength 耐電壓	Testing transformer capacity (耐壓計容量) :500 VA or more Trip current (遮斷電流) :2mA frequency (周波數) :50/60 Hz	(1)Between each pole in turn and all other poles 2000V/1 min. 導體相互間,1分鐘	Without breakdown or flashover shall occur 沒有損壞
			(2)Between conductors And outside body 4000 V/1 min. 導體表面間, 1分鐘	
3	Temperature rise 溫昇	A rated current is passed through the circuit. The devices under test were caused to carry the test current continuously for a period of 1h		The temperature rise of pins, terminals and contacts shall not exceed 45K
4	Resistance to Aging 老化試驗	The specimens are suspended freely in a heating cabinet, ventilated by natural circulation. They are kept in the cabinet, which is maintained at a temperature of 70 ±2℃, for 168h (7 days). After the test are allowed to attain approximately ambient temperature and are then examined. They shall show no crack visible to the naked eye, nor shall the material have become sticky or greasy, this being judged as follows. 1) A forefinger wrapped in a dry piece of rough cloth is pressed on the specimen with a force of 5N. 2) No traces of the cloth shall remain on the specimen and the material of the specimen shall not stick to the cloth.		After this test, the specimen shall show no damage which would lead to non-compliance with this standard.
5	Moisture resistance 耐濕性	The humidity treatment is carried out in a humidity cabinet containing air with a relative humidity maintained between 91% and 95%. The temperature of the air, at all places where specimens can be located, is maintained within ±1℃ of any convenient value t℃ between 20℃ and 30℃. Before being placed in the humidity cabinet, the specimens are brought to a temperature between t℃ and (t+4) ℃. 48h (2 day)		After this treatment, the specimen shall show no damage.

<table>
<tr><th colspan="2">Items
項目</th><th>Conditions
條件</th><th>Specification
規格</th></tr>
<tr><td>6</td><td>Polarity/Continuity</td><td>Line and neutral shall be test at 24V;shall be instantaneous</td><td>Without breakdown</td></tr>
<tr><td>7</td><td>Flexing test
屈曲強度</td><td>The oscillating member is moved through an angle of 90° (45° on either side of the vertical), the number of flexings being 10,000 and the rate of flexing 60/min.
Specimens with circular section flexible cables are turned through 90° in the oscillating member after 5 000 flexings; specimens with flat flexible cables are only bent in a direction perpendicular to the plane containing the axes of the conductors.
<table>
<tr><th></th><th>Load Weight (g)</th><th>Angle θ (°)</th><th>Optional direction (turns)</th><th>Furthermore 90° rotational direction (turns)</th><th>Rate of flexing per min (turns)</th></tr>
<tr><td>plug</td><td>0.75mm² ↓ 1020(10N)
1.0mm² ↑ 2040(20N)</td><td>45</td><td>10000</td><td>5000</td><td>60</td></tr>
<tr><td>connector</td><td>0.75mm² ↓ 1020(10N)
1.0mm² ↑ 2040(20N)</td><td>45</td><td>20000</td><td>10000</td><td>60</td></tr>
</table>
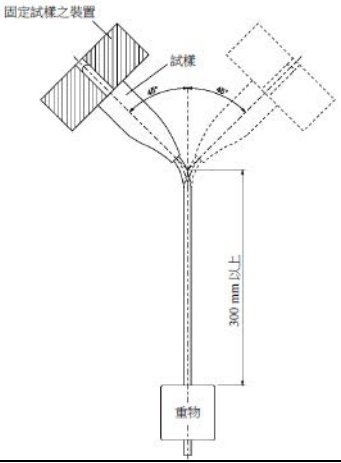
</td><td>No interruption of the current,
No short circuit between conductors.</td></tr>
<tr><td>8</td><td>Bending strength of connector body
本體機械強度</td><td>After the connector’s point is fixed as shown in the figure below. Load of 10kg shall be applied vertically and slowly for 15 s.
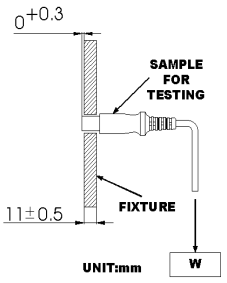
</td><td>After the test, the connector shall show no damage.</td></tr>
</table>

<table>
<tr><th colspan="2">Items
項目</th><th>Conditions
條件</th><th>Specification
規格</th></tr>
<tr><td>9</td><td>Withdrawal force
引拔力</td><td>Verification of the maximum withdrawal force
The connector is inserted to the full depth into and withdrawn from the appropriate appliance inlet 10 times. It is then again inserted for a principal mass is such that it exerts a force equal to one-tenth of the maximum withdrawal force specified in the table and it shall be made in one piece and a supplementary.

Verification of the minimum withdrawal force
The test pin gauge is applied to each individual connector contact with the contact axes vertical and the gauge hanging vertically downwards. The total mass of the gauge shall be such as to exert the applicable force as show in table.
<table>
<tr><th rowspan="3">Type of connector</th><th colspan="3">Withdrawal force
N (kg)</th></tr>
<tr><th colspan="2">Multi-pin gauge</th><th rowspan="2">Single-pin gauge minimum</th></tr>
<tr><th>Max</th><th>Min</th></tr>
<tr><td>0.2A
2.5A
6A
10A</td><td>50
(5.1)</td><td>10
(1.0)</td><td>1.5
(0.15)</td></tr>
<tr><td>16A</td><td>60
(6.1)</td><td>15
(1.5)</td><td>2
(0.2)</td></tr>
</table>
</td><td>After Verification of the maximum withdrawal force test. The principal mass is hung on the connector without jolting and the supplementary mass is allowed to fall from a height of 5 cm on to the principal mass. The connector shall not remain in the appliance inlet.

After Verification of the minimum withdrawal force test.
The test pin gauge is applied gently, and care is taken not to knock the assembly when checking the minimum withdrawal force.
The gauge shall not fall from the contact assembly within 3 sec.</td></tr>
<tr><td>10</td><td>Glow wire test
(灼熱絲)</td><td>Glow Wire Temp: 750℃
Ignition time 30s±1s.
The end of the glow wire shall be adjusted on the device so that it is inserted for 7±0.5 mm inside the sample.</td><td>After the test,
a)No flame shall be observed.

b)Flame shall be extinguished in 30 seconds after removing the glow wire.

c) No inflammation shall be observed on the tissue paper.</td></tr>
</table>

	Items 項目	Conditions 條件	Specification 規格
11	Blade security 銅片牢固力測試	Apply a straight pull of 98 Newton for 2 min between an attachment plug and blade(s). 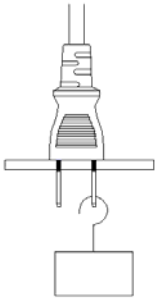	After the test, the blades shall not be displaced by more than 2.4mm.
12	Strain relief 外部拉力測試	Apply a straight pull of 137.2 Newton for 1 min between an attachment plug and a flexible cord and between a cord connector and a flexible cord. 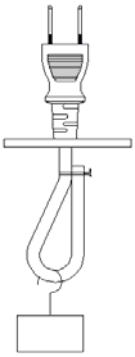 Between an attachment plug and a flexible cord 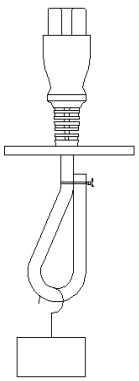 Between a cord connector and a flexible cord	Without damage, such as displacement or looseness or detachment of metal parts, conductor break, insulation damage etc.

Items 項目		Conditions 條件	Specification 規格
13	Ball pressure test 球壓測試	The sample is 2 mm wide, surrounding the phase and neutral pin entry holes of socket-outlets, shall be subjected to a ball-pressure test. The part under test shall be placed on a steel plate at least 3 mm thick and in direct contact with it. The surface of the part to be tested is placed in the horizontal position and the hemispherical tip of the test equipment is pressed against the surface with a force of 20 N. The test is made in a heating cabinet at a temperature of (125 ± 2) ˚C for 1h. After 1 h the ball shall be removed from the specimen, which is then immersed within 10 s, in cold water for cooling down to approximately room temperature. 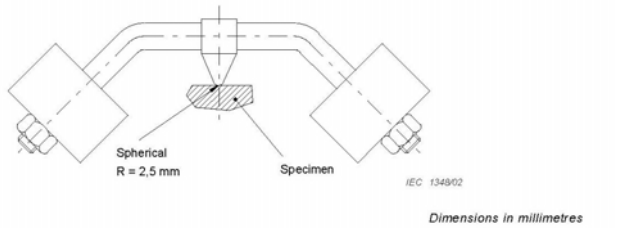 	The diameter of the impression caused by the ball is measured and shall not exceed 2 mm.
14	Tumbling barrel Test 滾筒	During the test, make the specimen free fall in the tumbling. 30 times if the mass of the specimen without flexible cable does not exceed 100 g and the barrel is turned at the rate of 10 falls per min.	After the test no part shall have become detached or loosened; the pins shall not have become so deformed that the plug cannot be introduced into a socket-outlet

經 濟 部 標 準 檢 驗 局

BUREAU OF STANDARDS,METROLOGY AND INSPECTION, MINISTRY OF ECONOMIC AFFAIRS

Product Certification PCD01

商 品 驗 證 登 錄 證 書

CERTIFICATE OF THE REGISTRATION OF PRODUCT CERTIFICATION

證書號碼： CI412060481545 號 00
Certificate No.

茲據 鎰勝工業股份有限公司 申請驗證登錄，經審查結果符合規定，准予登錄並使用商品安全標章 及識別號碼： R41048 。其登錄事項如下：

The application made by I SHENG ELECTRIC WIRE & CABLE CO.,LTD. for Registration of Product Certification has been reviewed and found to be in compliance with related regulations. Therefore, registration is granted with the Product Safety Mark and the Identification No. R41048 . Details of the registration are follows :

申 請 人 ：鎰勝工業股份有限公司 統一編號：22304288
Applicant Uniform No.

地 址 ：桃園市龜山區頂湖路50號
Address

生產廠場 ：詳如附表
Factory

廠 址 ：詳如附表
Factory Address

商品種類名稱：
Type/name of product

商品分類號列： 8544.42.90.90.9-D
C.C.C Code

中文名稱 ： 電源線組
Chinese name

英文名稱 ：
English name

型 式： SP-305B+IS-034 (125V 7A 2P+E C5)
Type

系列型式 ： 詳如附表
Series of the type

依據標準 ： CNS60799 (105年版)、IEC60320-1 (2001)、CNS15663第5節含有標示 (102年版)、CNS690 (105年版)
Standards

標準檢驗局發證（發證地址：100臺北市中正區濟南路1段4號）
This certificate is issued by the BSMI. (No.4, Sec. 1, Jinan Rd., Zhongzheng Dist., Taipei City 100, Taiwan)

本證書以電子文件行之，所載內容若有不符之處，以標準檢驗局系統登錄資料為主，查詢證書資料網址:https://civil.bsmi.gov.tw

登錄日期：中華民國	112	年	08	月	10	日
Registration Date	2023	(year)	08	(month)	10	(day)
本證書有效期限至	115	年	08	月	09	日
Expiration Date	2026	(year)	08	(month)	09	(day)
發證日期：中華民國	112	年	05	月	16	日
Date of issue	2023	(year)	05	(month)	16	(day)

經濟部 標準檢驗局 BSMI

註1：持本證書進口驗證登錄商品時，進口人須與本證書名義人相同。
註2：次年度商品驗證登錄年費繳納期限為當年11月30日，逾期未繳納者，經限期繳納屆期未繳納，即依商品檢驗法第42條第7款規定廢止驗證登錄，並自次年度1月1日起生效。
註3：本證書僅代表完成檢驗程序，不作為其他(如產地)證明。

經 濟 部 標 準 檢 驗 局

BUREAU OF STANDARDS,METROLOGY AND INSPECTION,
MINISTRY OF ECONOMIC AFFAIRS

商 品 驗 證 登 錄 證 書

CERTIFICATE OF THE REGISTRATION OF PRODUCT CERTIFICATION

證書號碼： CI412060481545 號 00
Certificate No.

系列型式： SP-30+IS-034 (2.5A C5)
Series of the type

SP-30+IS-14 (10A C13)
SP-30+IS-14 (7A C13)
SP-301+IS-14 (10A C13)
SP-301+IS-14 (12A C13)
SP-301+IS-14 (13A C13)
SP-301+IS-14 (15A C13)
SP-301+IS-14 (7A C13)
SP-301+IS-15 (10A C13)
SP-301+IS-15 (13A C13)
SP-301+IS-15 (15A C13)
SP-301+IS-15 (7A C13)
SP-301+IS-16B (12A C19)
SP-301+IS-16B (13A C19)
SP-301+IS-16B (15A C19)
SP-301+IS-19 (13A C15)
SP-305+IS-010 (10A C13)
SP-305+IS-034 (2.5A C5)
SP-305+IS-039 (2.5A C5)
SP-305+IS-14 (10A C13)
SP-305+IS-14 (7A C13)
SP-305+IS-15 (7A C13)
SP-305+IS-17 (10A C13)
SP-305+IS-17 (7A C13)
SP-305A+IS-034A (7A C5)
SP-305A+IS-14 (10A C13)
SP-305A+IS-14 (7A C13)
SP-305B+IS-010 (7A C13)
SP-305B+IS-034 (2.5A C5)
SP-305B+IS-039 (2.5A C5)

BSMI

BUREAU OF STANDARDS, METROLOGY AND INSPECTION, MINISTRY OF ECONOMIC AFFAIRS, REPUBLIC OF CHINA
經濟部
標準檢驗局
BSMI

經 濟 部 標 準 檢 驗 局

BUREAU OF STANDARDS,METROLOGY AND INSPECTION,
MINISTRY OF ECONOMIC AFFAIRS

商 品 驗 證 登 錄 證 書

CERTIFICATE OF THE REGISTRATION OF PRODUCT CERTIFICATION

證書號碼： CI412060481545 號 00
Certificate No.

系列型式： SP-305B+IS-039 (7A C5)
Series of the type

SP-305B+IS-14 (10A C13)
SP-305B+IS-14 (7A C13)
SP-305B+IS-14N (7A C13)
SP-305B+IS-15 (10A C13)
SP-305B+IS-15 (7A C13)
SP-305B+IS-17 (7A C13)
SP-308+IS-034 (2.5A C5)
SP-308+IS-14 (7A C13)
SP-308+IS-15 (10A C13)
SP-308+IS-15 (15A C13)
SP-308+IS-15 (7A C13)
SP-308D+IS-039B (2.5A C5)
SP-308D+IS-15A (10A C13)
SP-30A+IS-14 (15A C13)
SP-30A+IS-14C (10A C13)
SP-30A+IS-15G (15A C13)

(以下空白)

BSMI

經濟部 標準檢驗局 BSMI

經 濟 部 標 準 檢 驗 局

BUREAU OF STANDARDS,METROLOGY AND INSPECTION,
MINISTRY OF ECONOMIC AFFAIRS

商 品 驗 證 登 錄 證 書

CERTIFICATE OF THE REGISTRATION OF PRODUCT CERTIFICATION

證書號碼： CI412060481545 號 00
Certificate No.

生產廠場： 1. 越南鎰勝電子科技有限公司
Factory： 越南北寧省桂武工業區桂武路D4-2區

2. 鎰勝電子(深圳)有限公司
深圳市寶安區松崗街道塘下涌大道旁第一幢

3. 鎰勝電子科技(昆山)有限公司
江蘇省昆山市經濟技開發區泰山路888號

4. 鎰勝工業股份有限公司
桃園市龜山區頂湖路 50號

（以下空白）

經 濟 部 標 準 檢 驗 局

BUREAU OF STANDARDS,METROLOGY AND INSPECTION, MINISTRY OF ECONOMIC AFFAIRS

TAF Product Certification PCD01

商 品 驗 證 登 錄 證 書

CERTIFICATE OF THE REGISTRATION OF PRODUCT CERTIFICATION

證書號碼： CI414060481774
Certificate No.

案件類別： 00
Classification Code.

茲據 鎰勝工業股份有限公司 申請驗證登錄，經審查結果符合規定，准予登錄並使用商品安全標章及識別號碼： R41048 。其登錄事項如下：

The application made by I SHENG ELECTRIC WIRE & CABLE CO.,LTD. for Registration of Product Certification has been reviewed and found to be in compliance with related regulations. Therefore, registration is granted with the Product Safety Mark and the Identification No. R41048 . Details of the registration are follows :

申 請 人 ：鎰勝工業股份有限公司 統一編號：22304288
Applicant Uniform No.

地 址 ：桃園市333龜山區大華里頂湖路50,52號
Address

生產廠場 ：詳如附表
Factory

廠 址 ：詳如附表
Factory Address

商品種類名稱：
Type/name of product

商品分類號列： 8544.49.90.00.1-E
C.C.C Code

中文名稱 ： 聚氯乙烯(PVC)花線
Chinese name

英文名稱 ： PVC FLEXIBLE CORD
English name

型 式： HVCTF 0.75mm2、1.0mm2、1.25mm2、2.0mm2/2C、3C
Type

系列型式 ： HVCTFK 0.75mm2~2.0mm2/2C,VCTF 0.75mm2~2.0mm2/2C、3C,VCTFK 0.75mm2~2.0mm2/2C(以下空白)
Series of the type

依據標準 ： 其它標準:106年4月18日經標三字第10600038610號書函同意心線之識別(接地線顏色為綠滾黃)不適用CNS3199第4.3.1節表3之規定。、CNS3199 (83年版)、符合CNS 15663第5節「含有標示」規定 (102年版)
Standards

標準檢驗局發證（發證地址：100臺北市中正區濟南路1段4號）
This certificate is issued by the BSMI. (No.4, Sec. 1, Jinan Rd., Zhongzheng Dist., Taipei City 100, Taiwan)

本證書以電子文件行之，所載內容若有不符之處，以標準檢驗局系統登錄資料為主，查詢證書資料網址:https://civil.bsmi.gov.tw

登錄日期：中華民國	114	年	10	月	03	日
Registration Date	2025	(year)	10	(month)	03	(day)
本證書有效期限至	117	年	10	月	02	日
Expiration Date	2028	(year)	10	(month)	02	(day)
發證日期：中華民國	114	年	07	月	28	日
Date of issue	2025	(year)	07	(month)	28	(day)

經濟部 標準檢驗局 BSMI

註1：持本證書進口驗證登錄商品時，進口人須與本證書名義人相同。

註2：次年度商品驗證登錄年費繳納期限為當年11月30日，逾期未繳納者，經限期繳納屆期未繳納，即依商品檢驗法第42條第7款規定廢止驗證登錄，並自次年度1月1日起生效。

註3：本證書僅代表完成檢驗程序，不作為其他(如產地)證明。

經 濟 部 標 準 檢 驗 局

BUREAU OF STANDARDS,METROLOGY AND INSPECTION,
MINISTRY OF ECONOMIC AFFAIRS

商 品 驗 證 登 錄 證 書

CERTIFICATE OF THE REGISTRATION OF PRODUCT CERTIFICATION

證書號碼： CI414060481774
Certificate No.

案件類別： 00
Classification Code.

生產廠場：
Factory：

1. I-Sheng Electric Wire & Cable (Vietnam)
   Que Vo Industrial Park, Van Duong Ward, Bac Ninh City,
   Bac Ninh Province, Vietnam

2. 鎰勝電子科技(昆山)有限公司
   中國江蘇省昆山市經濟技術開發區泰山路888號

3. 鎰勝電子(深圳)有限公司
   中國廣東省深圳市寶安區松崗街道塘下涌社區廣田路274號一號廠房、二號廠房、三號廠房

4. 鎰勝工業股份有限公司
   桃園市333龜山區大華里頂湖路50,52號

(以下空白)

BSMI
經濟部 標準檢驗局 BSMI