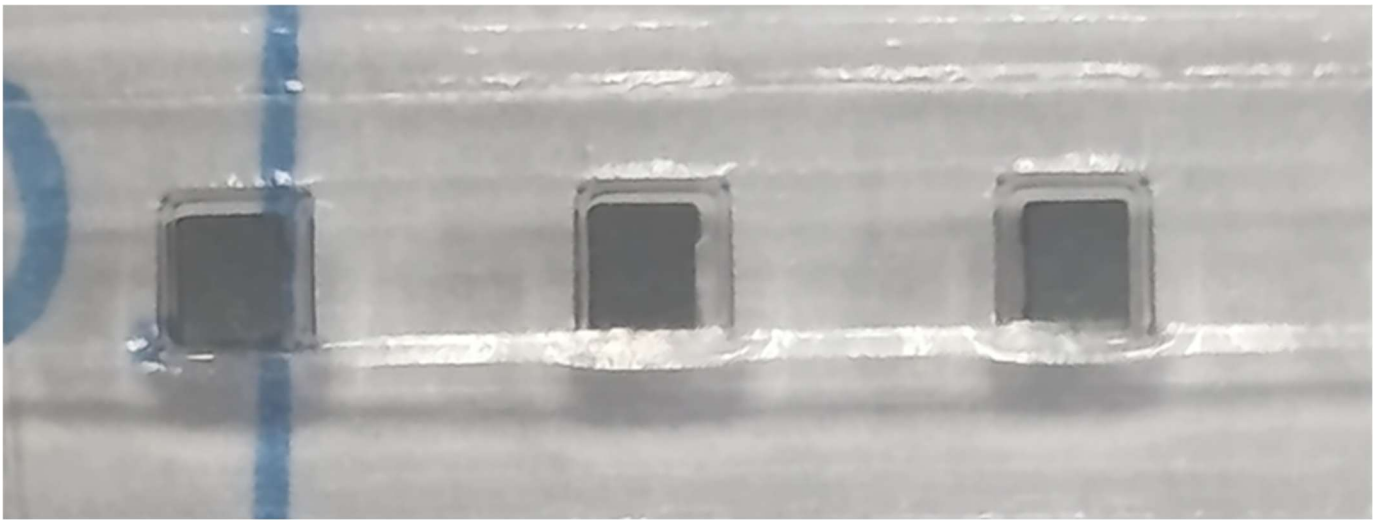

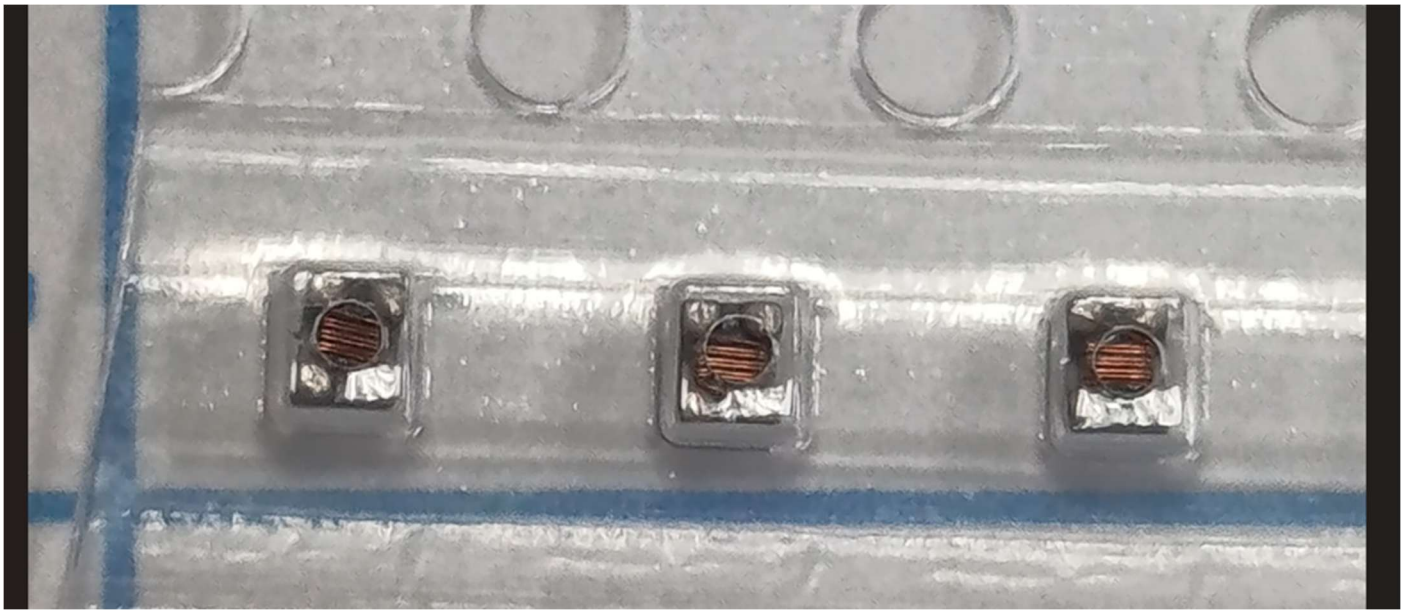

設計驗證
工程課
2026 -05- 18
發行

寶　　號
CUSTOMER　鈺緯

承　認　書

SPECIFICATION FOR APPROVAL

品名
PRODUCT NAME　WCM-1210HS-900T

設計驗證 工程課 2026-05-18 發行

客戶料號
CUSTOMER PART NO. _____

批號
SAMPLE NO. _____

日期
DATE. 2026/05/12

Customer Approved Status 客戶承認範圍

FULLY APPROVED (全部承認)	PARTILLY APPROVED (部份承認)	REVISE APPROVED (修訂承認)
Drawn by	Checked by	Approved by
陳雯欣	吳明珠	吳炳勳

KING CORE ELECTRONICS INC.
NO 269, Nanfong Rd., Pingjhen City, Taoyuan County Taiwan
Tel: 886-3-4698855 Fax: 886-4691395
Website:http:// www.kingcore.com.tw
E-mail: kc@mail.kingcore.com.tw

承認書內容 CONTENTS

項目 LISTED ITEM	頁數 PAGE	備註 REMARK
1. 承認書封面 COVER PAGE	1	
2. 目錄 INDEX	2	
3. 修訂履歷 REVISION RESUME	3	
4. 工程圖面 SHAPES AND DIMENSIONS	4	
5. 電氣特性 ELECTRICAL SPECIFICATIONS	4	
6. 產品測試資料 CHARACTERISTICS TEST DATA	5	
7. 曲線圖 ELECTRICAL CHARACTERISTICS CURVE	6	
8. 插入損失截止頻率圖 Insertion Loss Curve (CUT-OFF FREQUENCY)	7	
9. 測試圖 MEASURING CIRCUIT	8~9	
10. 包裝方式 PACKAGING	10~11	
11. 信賴度測試 RELIABILITY TEST	12~18	
12. SGS 測試報告 SGS REPORT	19~36	

製作 DRAWN BY:	確認 CHECKED BY:	承認 APPROVED BY:
陳雯欣	吳明球	吳炳勳

修訂履歷 REVISION RESUME

日期 DATE	版次 VERSION	修訂目的 PURPOSE	修訂內容概述 REVISION DESCRIPTION	備註 REMARK
2026/05/12	A	首次送承認書 INITIAL RELEASE		

製作 DRAWN BY:	確認 CHECKED BY:	承認 APPROVED BY:
陳雯欣	吳明球	吳炳勳

SPECIFICATION FOR APPROVAL

CUSTOMER:	鈺緯	CUST.P/N:	
ORDERING CODE:	WCM-1210HS-900T	K.C.P/N: P41203AT	

(1) SHAPE :

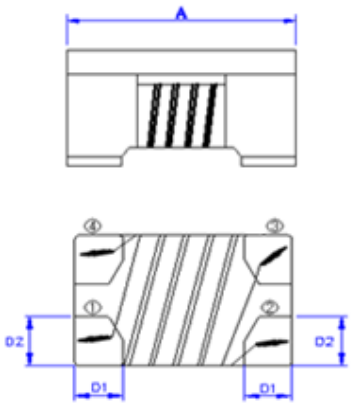

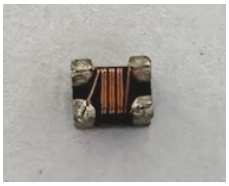

A	1.2±0.2	mm
B	1.0±0.2	mm
C	0.9±0.2	mm
D1	0.36Typ	mm
D2	0.38Typ	mm

(2)ELECTRICAL REQUIREMENTS:

1. COMMON MODE IMPEDANCE(Ω) : 90±25% (100MHz)
2. RDC : 0.3Ω(max.)
3. IDC : 400mA(max.)(△T)within 40℃.
4. CUT -OFF FREQUENCY (Sdd21): -3.15dB(6 GHz)(Typ)
5. Rated Voltage: 50 V(DC)
6. Insulation Resistance:10(MΩ)min

(3) TEST CONDITIONS:

1. IMPEDANCE : HP 4291B
2. RDC: HIOKI 3540 (SINGLE WIRE TEST)
3. IDC: HP4285A+HP42841A
4. CUT -OFF FREQUENCY: E5071C

(4)PACKING

☐ IN BULK ☐ VACUUM ☐ INSERTION

PCS/BAG*	BAGS/INNER BOX'	BOXES/CARTON =	PCS
PCS/PLATE*	PLATES/CARTON=	PCS	
PCS/TRAY*	TRAYS/CARTON=	PCS	
3000 PCS/REEL*	REELS/CARTON=	PCS	

(5) APPEARANCE

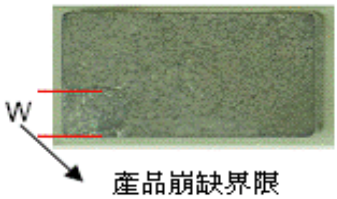

破損面積<0.2mm^2,仍在允收範圍.

(6)REMARK:

Approved by	吳炳勳
Checked by	吳明球
Drawn by	陳雯欣 2026/5/12
DWG.NO.	20265001A

ER011C

TEST DATA FOR PREPRODUCTION SAMPLES

CUSTOMER	鈺緯			CUST. P/N		
ORDERING CODE	***WCM-1210HS-900T***			K.C. P/N	***P41203AT***	
TEMP.	***20*** °C	RH	***66*** %	DWG.NO.	***20265001A***	
WIRE		WINDING		Q'TY	***5PCS***	
Test Instruments						
Meas. Item.	***COMMON MODE IMPEDANCE(Ω)***	***RDC (Ω)***	***A mm***	***B mm***	***C mm***	
Specification	**90±25%**	**0.3 max.**	**1.2±0.2**	**1.0±0.2**	**0.9±0.2**	
Test Freq.	**100 MHz**					
sample#1	**89**	**0.141**	**1.23**	**1.03**	**0.91**	
sample#2	**95**	**0.148**	**1.28**	**1.03**	**0.93**	
sample#3	**90**	**0.145**	**1.28**	**1.04**	**0.94**	
sample#4	**88**	**0.142**	**1.27**	**1.03**	**0.92**	
sample#5	**98**	**0.140**	**1.27**	**1.02**	**0.92**	
sample#6						
sample#7						
sample#8						
sample#9						
sample#10						
$\overline{X}$	**92.0**	**0.1432**	**1.266**	**1.030**	**0.924**	
R	**10**	**0.008**	**0.05**	**0.02**	**0.03**	

REMARK:

Approved by: 吳炳勳

Checked by: 吳明球

Drawn by: 陳雯欣

KING CORE ELECTRONICS INC.

WCM-1210HS-900T

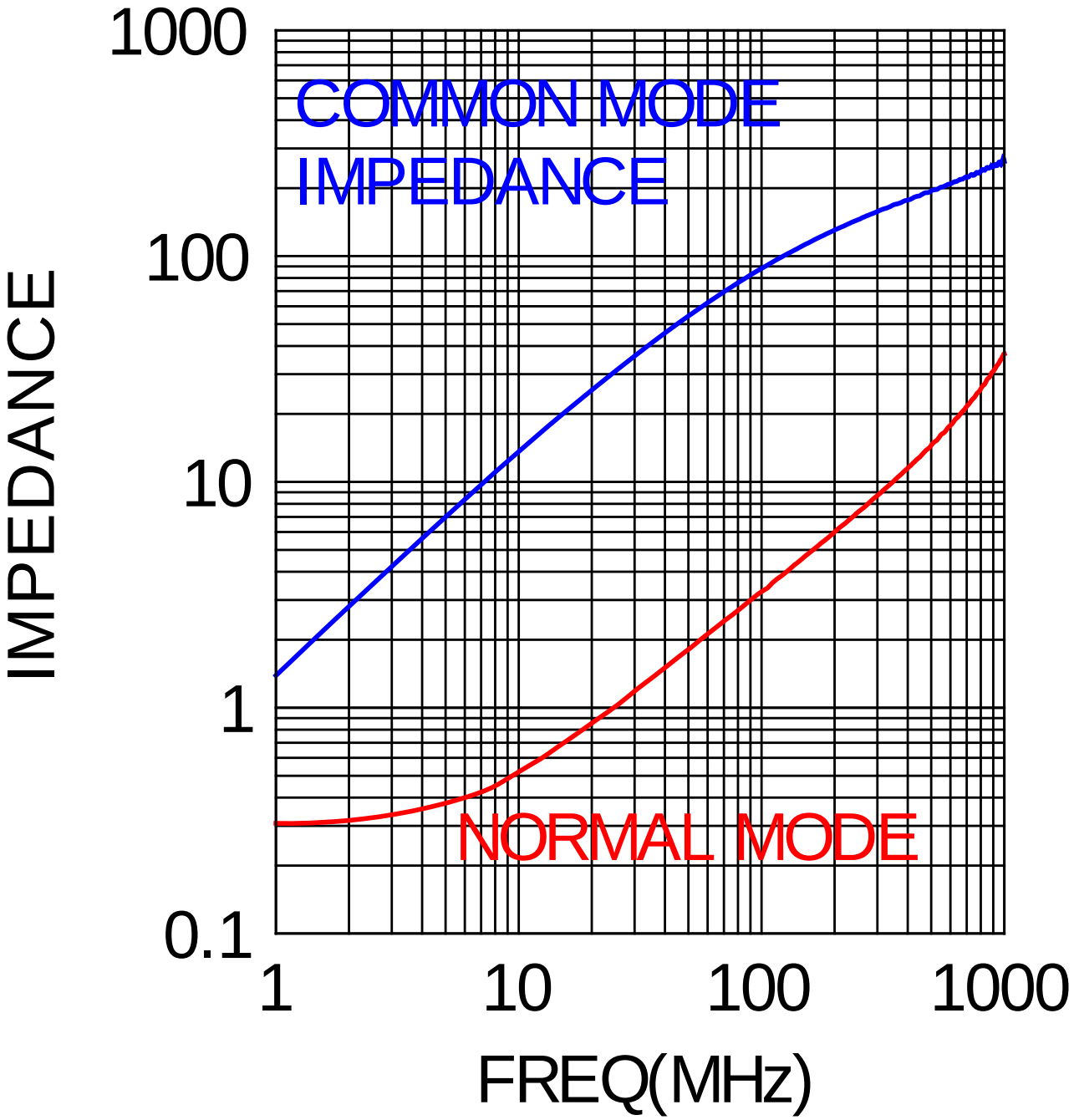

Insertion Loss Curve (CUT-OFF FREQUENCY)

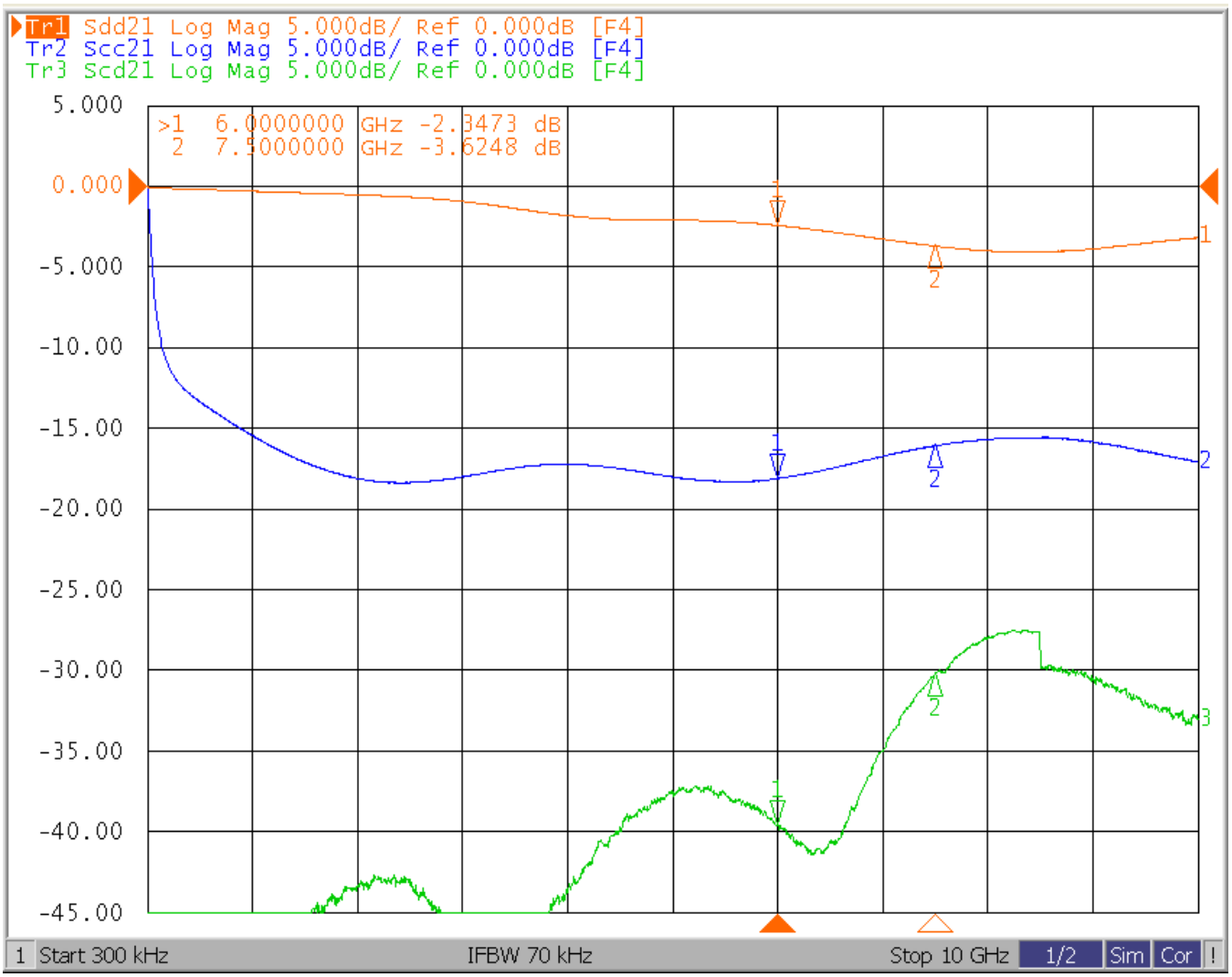

KING CORE ELECTRONICS INC.

SPEC FOR APPROVAL

WCM-1210

MEASURING CIRCUIT

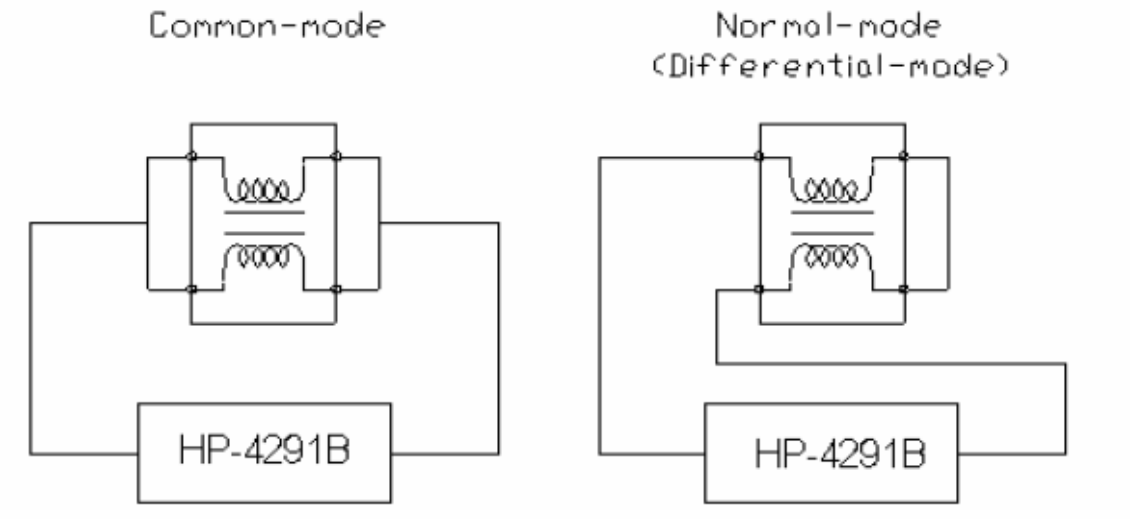

EQUIVALENT CIRCUIT DIAGRAM & RECOMMEND PATTERN

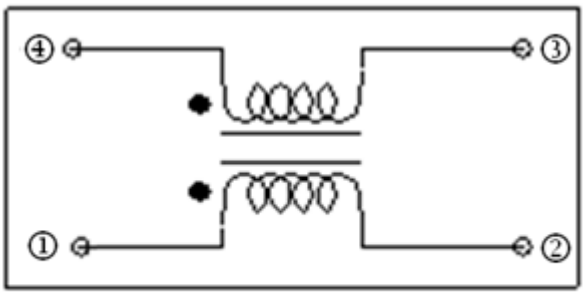

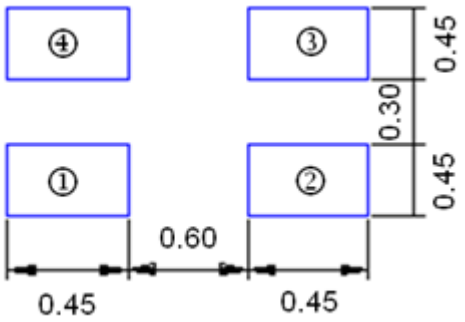

Unit(mm)

MEASUREMENT DIAGRAM

DCR RESISTANCE

TERMINAL TO BE TESTED

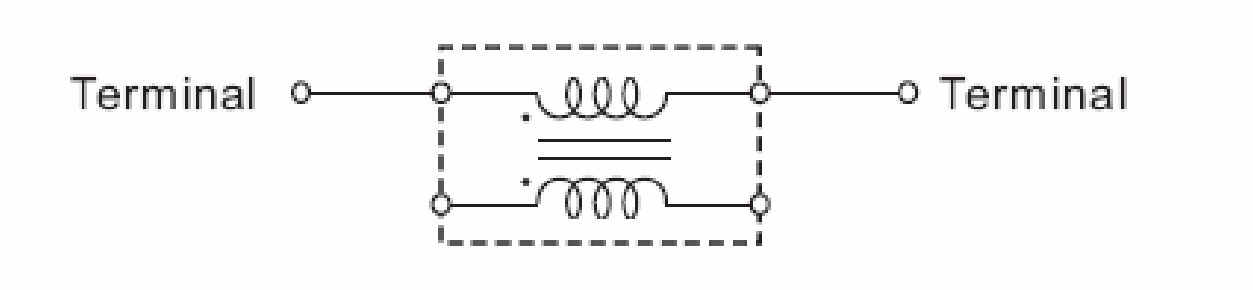

MEASUREMENT DIAGRAM

RATED CURRENT

TERMINAL TO BE TESTED

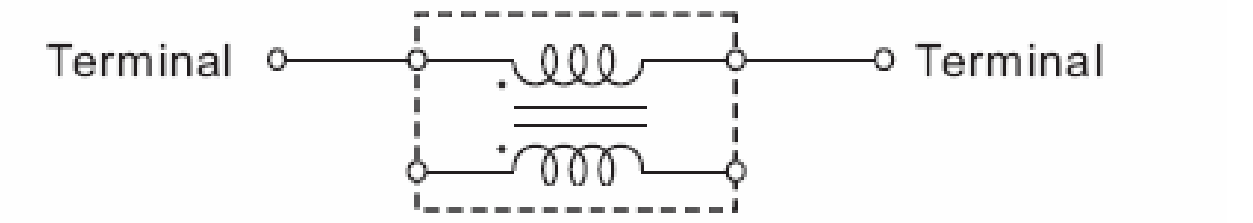

KING CORE ELECTRONICS INC.
Tel: 886-3-4698855 Fax: 886-3-4691395
Website: www.kingcore.com.tw
e-mail: kc@mail.kingcore.com.tw

PACKING SPECIFICATION WCM-1210
REEL:3000PCS

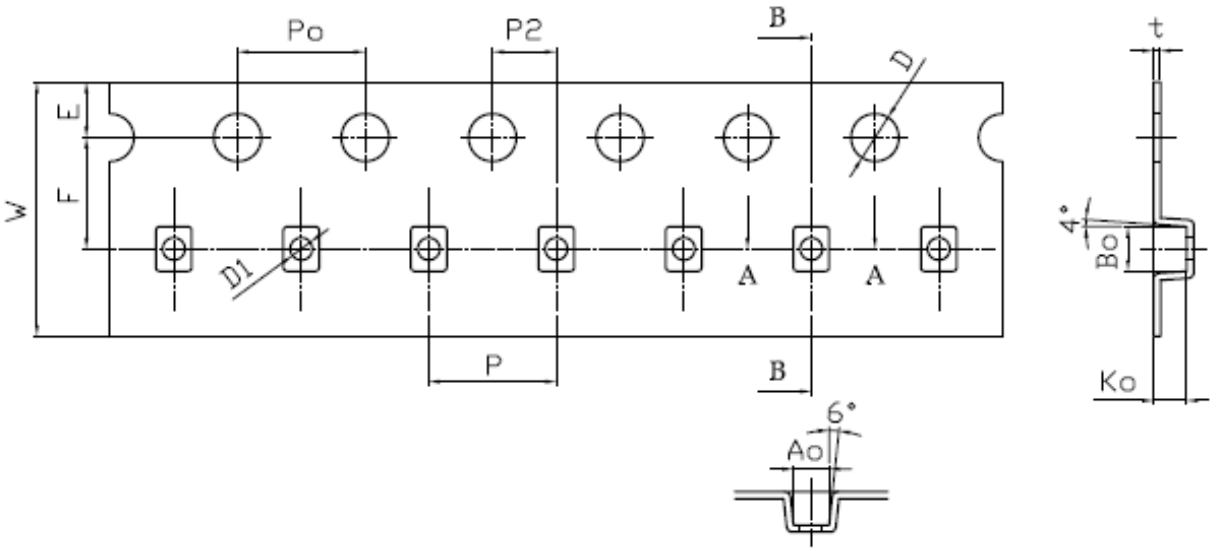

2.1Carrier tape dimensions

外觀	規格	公差
W	8.00	±0.10
P	4.00	±0.10
E	1.75	±0.10
F	3.50	±0.05
P2	2.00	±0.05
D	1.50	+0.10 −0.00
D1	0.70	±0.10
Po	4.00	±0.10
10Po	40.00	±0.20

2.2 Carrier tape dimensions

外觀	規格	公差
Ao	1.12	±0.10
Bo	1.40	±0.10
Ko	1.05	±0.10
t	0.22	±0.05

KING CORE ELECTRONICS INC.
Tel: 886-3-4698855 Fax: 886-3-4691395
Website: www.kingcore.com.tw
e-mail: kc@mail.kingcore.com.tw

REEL DIAMENSIONS

CARRIER TYPE REELS 7*8mm

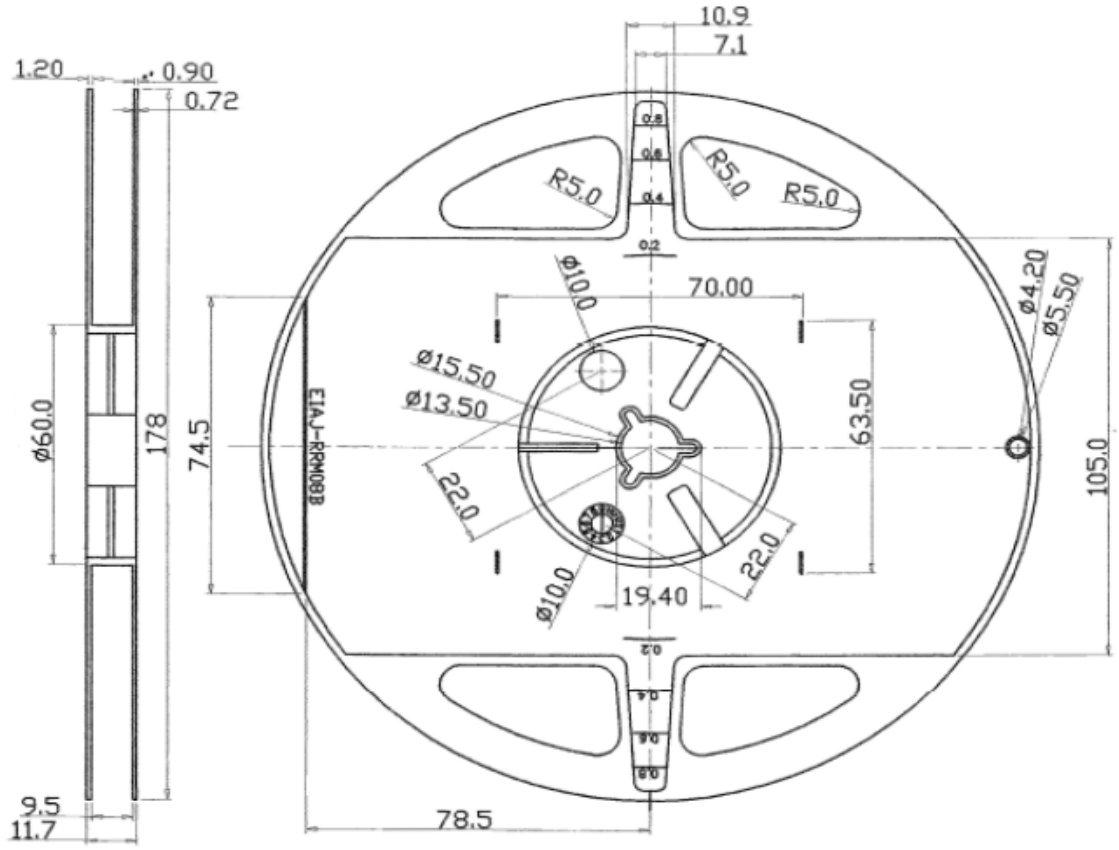

STRUCTURE OF TAPING

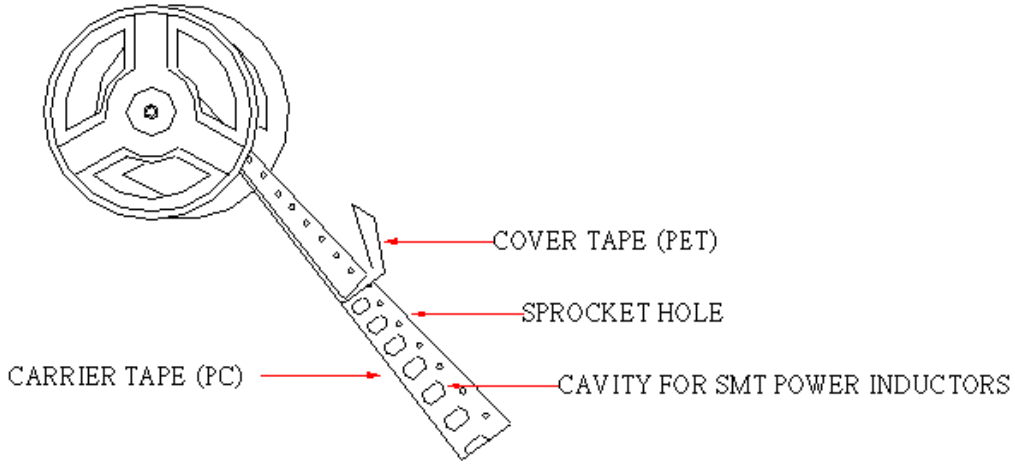

※COVER TAPE: POLYETHYLENE TEREPHTHALATE (PET)
※CARRIER TAPE: POLYCARBONATE (PC)

KING CORE ELECTRONICS INC.
Tel: 886-3-4698855 Fax: 886-3-4691395
Web Site:http://www.kingcore.com.tw
e-mail: kc@mail.kingcore.com.tw

RELIABILITY TEST - WCM SERIES

RELIABILITY TEST

ITEM	SPECIFICATION	TEST CONDITION
Soldering heat resistance	The chip shall not be cracks . More than 75% of terminal electrode shall be covered with solder. Impedance: within±20% of the initial value. Inductance: within±10% of the initial value.	Preheat:150℃,60 seconds Solder:temperature:260±5℃ Reflow peak time 5 second at 260 ℃ 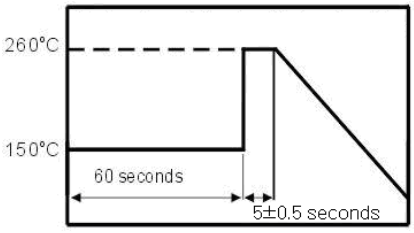
Push Test	No evidence of coming off glass-epoxy substrate. Products shall not be mechanical damaged. 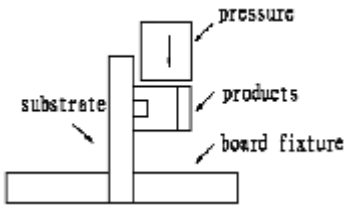	It shall be soldered on the substrate. • Applying Time：5 ± 1 seconds

TYPE	P(kgf)min
1210	0.4
2012	0.6
3216	0.6
3225	0.8
3532	0.8
4532	0.8

KING CORE ELECTRONICS INC.

Tel: 886-3-4698855 Fax: 886-3-4691395
Web Site:http://www.kingcore.com.tw
e-mail: kc@mail.kingcore.com.tw

RELIABILITY TEST

ITEM	SPECIFICATION	TEST CONDITION
High temperature resistance	Appearance: Ferrite shall not be damaged. Impedance : Within ±20% of the initial value.	Temperature:85℃ Testing time: 1000 hours. Measurement: After placing for 24 hours min. 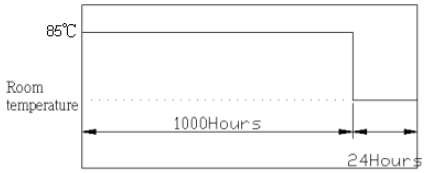
Low temperature resistance	Appearance: cracking, chipping or any other defects harmful to the characteristics shall not be allowed. Impedance: Within±20% of the initial value.	Temperature:-25℃ Testing time: 1000 hours. Measurement: After placing for 24 hours min. 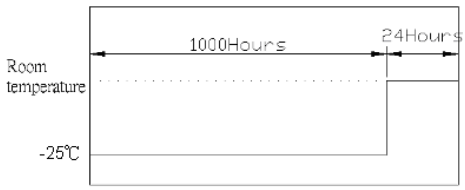
Humidity resistance	Appearance: Ferrite shall not be damaged. Impedance: Within ±20% of the initial value.	Humidity:95%RH Temperature:60℃ Testing time: 1000 hours. Measurement: After placing for 24 hours min. 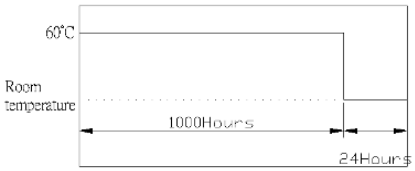
Thermal shock	Appearance: Cracking, chipping or any other defects harmful to the characteristics shall not be allowed. Impedance: Within ±20% of the initial value.	Temperature:-25℃,+85℃, kept stabilized for 30 minutes each Cycle:100 cycles Measurement: After placing for 24 hours min. 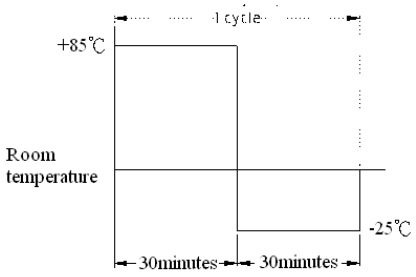

Note

1. Operating Temperature Range:-25℃ to +85℃(including self-heating.)
2. Storage Temperature Range:-40℃ to +85℃(For products in unopened tape package 0℃ to +40℃.)

KING CORE ELECTRONICS INC.
Tel: 886-3-4698855 Fax: 886-3-4691395
Web Site:http://www.kingcore.com.tw
e-mail: kc@mail.kingcore.com.tw

KING CORE ELECTRICS INC

1. Recommended solderability temperature profile

◎Reflow Soldering Temp Profile

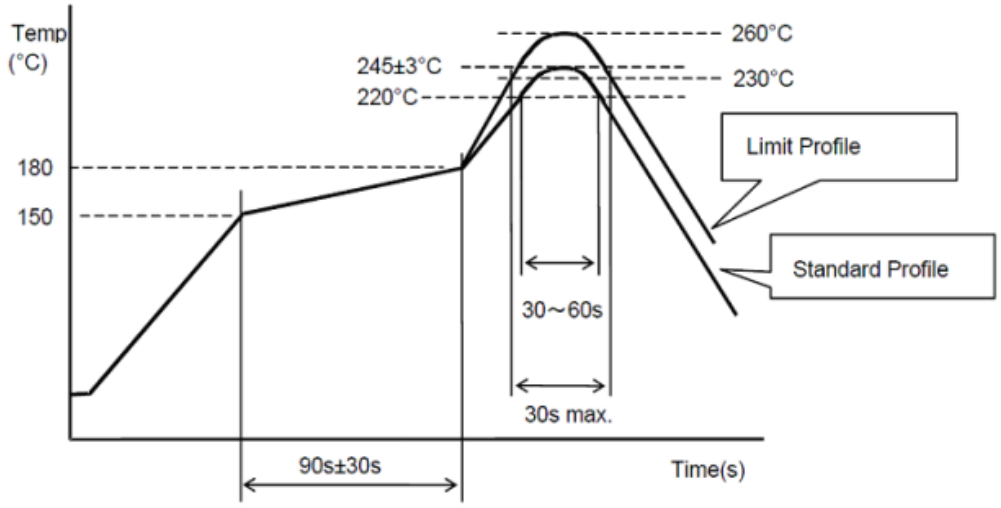

	Standard Profile	Limit Profile
Pre-heating	150~180°C 、90s±30s	
Heating	above 220°C、30s~60s	above 240°C、30s max.
Peak temperature	245±3°C	260°C、10s
Cycle of reflow	2 times	2 times

2. Flux,Solder

- Use rosin-based flux
- Don't use high acidic flux with halide content exceeding 0.2(wt)% (chlorine conversion value).
- Use lead-free solder, use Sn-0.3%Ag-0.5%Cu solder
- Standard thickness of solder paste: 0.12~0.15mm

3. Reworking with soldering iron

The following conditions must be strictly followed when using a soldering iron.

Pre – heating	150℃, 1 minute
Tip temperature	350℃ max.
Soldering iron output	30w max.
End of soldering iron	ϕ3mm max.
Soldering time	3 seconds max.

Note : Do not directly touch the products with the tip of the soldering iron in order to prevent the crack on the products due to the thermal shock.

4.Cleaning Conditions

Products should be cleaned on the following conditions.
(1) Cleaning temperature shall be limited to 60℃max.
(40℃ max for fluoride and alcohol type cleaner.)

(2) Ultrasonic cleaning shall comply with the following conditions with avoiding the resonance phenomenon at the mounted products and P.C.B.

Power	: 20 w / liter max.
Frequency	:28 kHz ~ 40 kHz
Time	:5 minutes max.

(3) Cleaner
◎Alcohol cleaner
- Isopropyl alcohol (IPA)

◎Aqueous agent
- PINE ALPHA ST – 100S

(4) There shall be no residual flux and residual cleaner after cleaning, extra flux maybe affect the electrical characteristics. In the case of using aqueous agent, products shall be dried completely after rinse with de-ionized water in order to remove the cleaner.

(5) Cleaning Conditions
Do not clean after soldering. Some cleaning agents may degrade bonding strength,and characteristics of products by detaching. If cleaning,please contact us

5. RESIN COATING

The impedance value may change due to high cure-stress of resin to be used for coating/molding products. An open circuit issue may occur by mechanical stress caused by the resin, amount/cured shape of resin, or operating condition etc. Some resin contains some impurities or chloride possible to generate chlorine by hydrolysis under some operating condition may cause corrosion of wire of coil, leading to open circuit. So, please pay your careful attention in selecting resin in case of coating/molding the products with the resin. Prior to use the coating resin, please make sure no reliability issue is observed by evaluating products mounted on your board.

6. ASSEMBLING

<Exclusive use of Reflow soldering> Flow soldering may cause deterioration in insulation resistance. So, reflow soldering shall be applied for this product.

7.Attention regarding P.C.B. bending

The following shall be considered when designing and laying out P.C.B.

(1) P.C.B shall be designed so that products are not subjected to the mechanical stress due to warping the board.

[Products direction]

Poor example

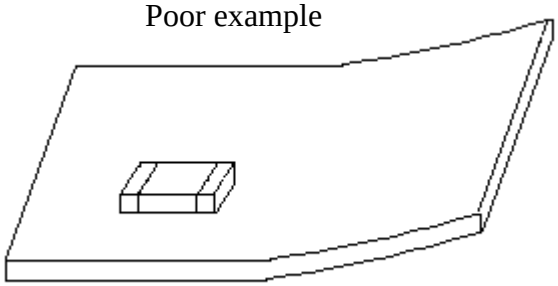

Good example

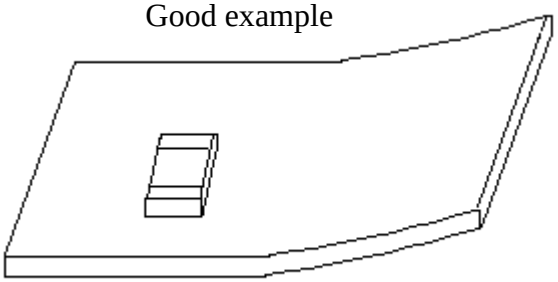

Products shall be located in the sideways direction to the mechanical stress.

(2) Products location on P.C.B. separation.

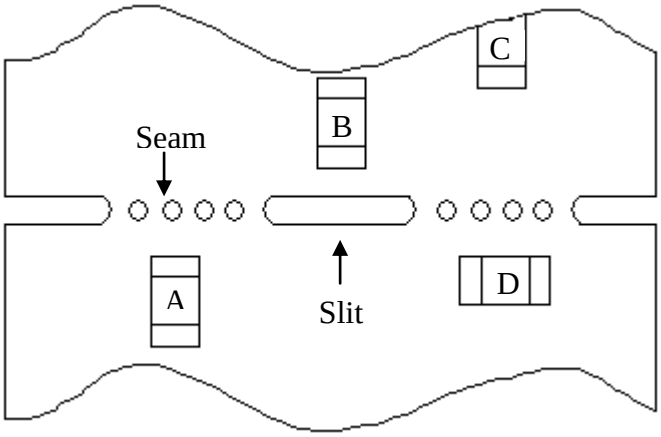

Products shall be located carefully so that products are not subjected to the mechanical stress due to warping the board. Because they may be subjected the mechanical stress in magnitude of A > C > B ≈ D.

KING CORE ELECTRONICS INC.
Tel: 886-3-4698855 Fax: 886-3-4691395
Web Site:http://www.kingcore.com.tw
e-mail: kc@mail.kingcore.com.tw

8.Resin Coating

The electrical characteristics may be changed due to the large cure-stress of the resin to be used for coating/molding products. Some resin contains some impurities or chloride possible to generate chlorine by hydrolysis under some operating condition may cause corrosion of wire of coil ,leading to open circuit. So please pay your careful attention in selecting resin to prevent any affection on the product in case of coating/molding the products with the resin. In prior to use,please make the reliability evaluation with the product mounted in your application set.

9.Caution for use

(1) Limitation of Applications
Please contact us before using our products for the applications listed below which require especially high reliability for the prevention of defects which might directly cause damage to the third party's life, body or property.

1. Aircraft equipment
2. Aerospace equipment
3. Undersea equipment
4. Power plant control equipment
5. Medical equipment
6. Transportation equipment (vehicles, trains, ships, etc.)
7. Traffic signal equipment
8. Disaster prevention / crime prevention equipment
9. Data-processing equipment
10. Applications of similar complexity and / or reliability Requirements to the applications listed in the above.

(2) There is possibility that the inductance value change due to magnetism. Don't use a magnet or a pair of tweezers with magnetism when chip coil are handled. (The tip of the tweezers should de molded with resin or pottery.)

(3) Sharp material, such as a pair of tweezers, shall not be touched to the winding portion to prevent the breaking of wire.

(4) Mechanical shock should not be applied to the products mounted on the board to prevent the breaking of the core.

10.Storage and Handling Requirements

(1) Storage period

Products should be used in 6 months from the day of KINGCORE outgoing inspection. Solerability should be checked if this period is exceeded.

(2) Storage conditions

- Products should be storage in the warehouse on the following conditions.

  Temperature : 0 ~ 40℃
  Humidity : 55 ~ 70% relative humidity
  No rapid change on temperature and humidity

- Don't keep products in corrosive gases such as sulfur, chlorine gas or acid, or it may cause oxidation of electrode, resulting in poor solderability.
- Products should be stored on the palette for the prevention of the influence from humidity, dust and so on.
- Products should be stored in the warehouse without heat shock, vibration, direct sunlight etc.
- Products should be stored under the airtight package condition.

(3) Handling Condition

Care should be taken when transporting of handling product to avoid excessive vibration or mechanical shock.

測試報告
Test Report

號碼(No.): ETR26204665　　日期(Date): 06-Mar-2026　　

鈞寶電子工業股份有限公司 (KING CORE ELECTRONICS INC.)
桃園市平鎮區南豐路269號(平鎮工業區) (NO. 269, NANFONG RD., PINGJHEN DIST., TAOYUAN CITY 324, TAIWAN)

以下測試樣品係由申請廠商所提供及確認 (The following sample(s) was/were submitted and identified by the applicant as)：

送樣廠商(Sample Submitted By)	:	鈞寶電子工業股份有限公司 (KING CORE ELECTRONICS INC.)
樣品名稱(Sample Name)	:	SMD COMMON MODE CHOKE
樣品型號(Style/Item No.)	:	WCM TYPE

==========

收件日(Sample Receiving Date)	:	26-Feb-2026
測試期間(Testing Period)	:	26-Feb-2026 to 06-Mar-2026

測試需求(Test Requested) :
(1) 依據客戶指定，參考RoHS 2011/65/EU Annex II及其修訂指令(EU) 2015/863測試鎘、鉛、汞、六價鉻、多溴聯苯、多溴聯苯醚, DBP, BBP, DEHP, DIBP。 (As specified by client, with reference to RoHS 2011/65/EU Annex II and amending Directive (EU) 2015/863 to determine Cadmium, Lead, Mercury, Cr(VI), PBBs, PBDEs, DBP, BBP, DEHP, DIBP contents in the submitted sample(s).)
(2) 其他測試項目請見下一頁。 (Please refer to next pages for the other item(s).)

測試結果(Test Results) : 請參閱下一頁 (Please refer to following pages.)

結　　論(Conclusion) : (1) 根據客戶所提供的樣品，其鎘、鉛、汞、六價鉻、多溴聯苯、多溴聯苯醚, DBP, BBP, DEHP, DIBP的測試結果符合RoHS 2011/65/EU Annex II暨其修訂指令(EU) 2015/863之限值要求。 (Based on the performed tests on submitted sample(s), the test results of Cadmium, Lead, Mercury, Cr(VI), PBBs, PBDEs, DBP, BBP, DEHP, DIBP comply with the limits as set by RoHS Directive (EU) 2015/863 amending Annex II to Directive 2011/65/EU.)

Troy Chang / Department Manager
Signed for and on behalf of
SGS TAIWAN LTD.
Chemical Laboratory - Taipei

CHECK REPORT
PIN CODE: 3EC50DD4

This document is issued by the Company subject to its General Conditions of Service printed overleaf, available on request or accessible at https://www.sgs.com.tw/terms-of-service and, for electronic format documents, subject to Terms and Conditions for Electronic Documents at https://www.sgs.com.tw/terms-of-service. Attention is drawn to the limitation of liability, indemnification and jurisdiction issues defined therein. Any holder of this document is advised that information contained hereon reflects the Company's findings at the time of its intervention only and within the limits of client's instruction, if any. The Company's sole responsibility is to its Client and this document does not exonerate parties to a transaction from exercising all their rights and obligations under the transaction documents. This document cannot be reproduced, except in full, without prior written approval of the Company. Any unauthorized alteration, forgery or falsification of the content or appearance of this document is unlawful and offenders may be prosecuted to the fullest extent of the law. Unless otherwise stated the results shown in this test report refer only to the sample(s) tested.

測試報告
Test Report

鈞寶電子工業股份有限公司 (KING CORE ELECTRONICS INC.)
桃園市平鎮區南豐路269號(平鎮工業區) (NO. 269, NANFONG RD., PINGJHEN DIST., TAOYUAN CITY 324, TAIWAN)

測試部位敘述 (Test Part Description)

No.1 : SMD COMMON MODE CHOKE

測試結果 (Test Results)

測試項目 (Test Items)	測試方法 (Method)	單位 (Unit)	MDL	結果 (Result)	限值 (Limit)
				No.1	
鎘 (Cd) (Cadmium (Cd))	參考IEC 62321-5: 2013，以感應耦合電漿發射光譜儀分析。(With reference to IEC 62321-5: 2013, analysis was performed by ICP-OES.)	mg/kg	2	n.d.	100
鉛 (Pb) (Lead (Pb))	參考IEC 62321-5: 2013，以感應耦合電漿發射光譜儀分析。(With reference to IEC 62321-5: 2013, analysis was performed by ICP-OES.)	mg/kg	2	n.d.	1000
汞 (Hg) (Mercury (Hg))	參考IEC 62321-4: 2013+ AMD1: 2017，以感應耦合電漿發射光譜儀分析。(With reference to IEC 62321-4: 2013+ AMD1: 2017, analysis was performed by ICP-OES.)	mg/kg	2	n.d.	1000
六價鉻 Cr(VI) (Hexavalent Chromium Cr(VI))	參考IEC 62321-7-2: 2017，以紫外光-可見光分光光度計分析。(With reference to IEC 62321-7-2: 2017, analysis was performed by UV-VIS.)	mg/kg	8	n.d.	1000
一溴聯苯 (Monobromobiphenyl)	參考IEC 62321-6: 2015，以氣相層析儀/質譜儀分析。(With reference to IEC 62321-6: 2015, analysis was performed by GC/MS.)	mg/kg	5	n.d.	-
二溴聯苯 (Dibromobiphenyl)		mg/kg	5	n.d.	-
三溴聯苯 (Tribromobiphenyl)		mg/kg	5	n.d.	-
四溴聯苯 (Tetrabromobiphenyl)		mg/kg	5	n.d.	-
五溴聯苯 (Pentabromobiphenyl)		mg/kg	5	n.d.	-
六溴聯苯 (Hexabromobiphenyl)		mg/kg	5	n.d.	-
七溴聯苯 (Heptabromobiphenyl)		mg/kg	5	n.d.	-
八溴聯苯 (Octabromobiphenyl)		mg/kg	5	n.d.	-
九溴聯苯 (Nonabromobiphenyl)		mg/kg	5	n.d.	-
十溴聯苯 (Decabromobiphenyl)		mg/kg	5	n.d.	-
多溴聯苯總和 (Sum of PBBs)		mg/kg	-	n.d.	1000

This document is issued by the Company subject to its General Conditions of Service printed overleaf, available on request or accessible at https://www.sgs.com.tw/terms-of-service and, for electronic format documents, subject to Terms and Conditions for Electronic Documents at https://www.sgs.com.tw/terms-of-service. Attention is drawn to the limitation of liability, indemnification and jurisdiction issues defined therein. Any holder of this document is advised that information contained hereon reflects the Company's findings at the time of its intervention only and within the limits of client's instruction, if any. The Company's sole responsibility is to its Client and this document does not exonerate parties to a transaction from exercising all their rights and obligations under the transaction documents. This document cannot be reproduced, except in full, without prior written approval of the Company. Any unauthorized alteration, forgery or falsification of the content or appearance of this document is unlawful and offenders may be prosecuted to the fullest extent of the law. Unless otherwise stated the results shown in this test report refer only to the sample(s) tested.

鈞寶電子工業股份有限公司 (KING CORE ELECTRONICS INC.)
桃園市平鎮區南豐路269號(平鎮工業區) (NO. 269, NANFONG RD., PINGJHEN DIST., TAOYUAN CITY 324, TAIWAN)

測試項目 (Test Items)	測試方法 (Method)	單位 (Unit)	MDL	結果 (Result) No.1	限值 (Limit)
一溴聯苯醚 (Monobromodiphenyl ether)	參考IEC 62321-6: 2015，以氣相層析儀/質譜儀分析。(With reference to IEC 62321-6: 2015, analysis was performed by GC/MS.)	mg/kg	5	n.d.	-
二溴聯苯醚 (Dibromodiphenyl ether)		mg/kg	5	n.d.	-
三溴聯苯醚 (Tribromodiphenyl ether)		mg/kg	5	n.d.	-
四溴聯苯醚 (Tetrabromodiphenyl ether)		mg/kg	5	n.d.	-
五溴聯苯醚 (Pentabromodiphenyl ether)		mg/kg	5	n.d.	-
六溴聯苯醚 (Hexabromodiphenyl ether)		mg/kg	5	n.d.	-
七溴聯苯醚 (Heptabromodiphenyl ether)		mg/kg	5	n.d.	-
八溴聯苯醚 (Octabromodiphenyl ether)		mg/kg	5	n.d.	-
九溴聯苯醚 (Nonabromodiphenyl ether)		mg/kg	5	n.d.	-
十溴聯苯醚 (Decabromodiphenyl ether)		mg/kg	5	n.d.	-
多溴聯苯醚總和 (Sum of PBDEs)		mg/kg	-	n.d.	1000
鄰苯二甲酸丁苯甲酯 (BBP) (Butyl benzyl phthalate (BBP))	參考IEC 62321-8: 2017，以氣相層析儀/質譜儀分析。(With reference to IEC 62321-8: 2017, analysis was performed by GC/MS.)	mg/kg	50	n.d.	1000
鄰苯二甲酸二丁酯 (DBP) (Dibutyl phthalate (DBP))		mg/kg	50	n.d.	1000
鄰苯二甲酸二(2-乙基己基)酯 (DEHP) (Di-(2-ethylhexyl) phthalate (DEHP))		mg/kg	50	n.d.	1000
鄰苯二甲酸二異丁酯 (DIBP) (Diisobutyl phthalate (DIBP))		mg/kg	50	n.d.	1000
六溴環十二烷及所有主要被辨別出的異構物(HBCDD) (α- HBCDD, β- HBCDD, γ- HBCDD) (Hexabromocyclododecane (HBCDD) and all major diastereoisomers identified (α- HBCDD, β- HBCDD, γ- HBCDD)) (CAS No.: 25637-99-4, 3194-55-6 (134237-51-7, 134237-50-6, 134237-52-8))	參考IEC 62321: 2008，以氣相層析儀/質譜儀分析。(With reference to IEC 62321: 2008, analysis was performed by GC/MS.)	mg/kg	5	n.d.	-

This document is issued by the Company subject to its General Conditions of Service printed overleaf, available on request or accessible at https://www.sgs.com.tw/terms-of-service and, for electronic format documents, subject to Terms and Conditions for Electronic Documents at https://www.sgs.com.tw/terms-of-service. Attention is drawn to the limitation of liability, indemnification and jurisdiction issues defined therein. Any holder of this document is advised that information contained hereon reflects the Company's findings at the time of its intervention only and within the limits of client's instruction, if any. The Company's sole responsibility is to its Client and this document does not exonerate parties to a transaction from exercising all their rights and obligations under the transaction documents. This document cannot be reproduced, except in full, without prior written approval of the Company. Any unauthorized alteration, forgery or falsification of the content or appearance of this document is unlawful and offenders may be prosecuted to the fullest extent of the law. Unless otherwise stated the results shown in this test report refer only to the sample(s) tested.

鈞寶電子工業股份有限公司 (KING CORE ELECTRONICS INC.)
桃園市平鎮區南豐路269號(平鎮工業區) (NO. 269, NANFONG RD., PINGJHEN DIST., TAOYUAN CITY 324, TAIWAN)

測試項目 (Test Items)	測試方法 (Method)	單位 (Unit)	MDL	結果 (Result) No.1	限值 (Limit)
氟 (F) (Fluorine (F)) (CAS No.: 14762-94-8)	參考BS EN 14582: 2016，以離子層析儀分析。(With reference to BS EN 14582: 2016, analysis was performed by IC.)	mg/kg	50	n.d.	-
氯 (Cl) (Chlorine (Cl)) (CAS No.: 22537-15-1)		mg/kg	50	n.d.	-
溴 (Br) (Bromine (Br)) (CAS No.: 10097-32-2)		mg/kg	50	n.d.	-
碘 (I) (Iodine (I)) (CAS No.: 14362-44-8)		mg/kg	50	n.d.	-
砷 (As) (Arsenic (As)) (CAS No.: 7440-38-2)	參考US EPA 3052: 1996，以感應耦合電漿發射光譜儀分析。(With reference to US EPA 3052: 1996, analysis was performed by ICP-OES.)	mg/kg	2	n.d.	-
鈹 (Be) (Beryllium (Be)) (CAS No.: 7440-41-7)	參考US EPA 3052: 1996，以感應耦合電漿發射光譜儀分析。(With reference to US EPA 3052: 1996, analysis was performed by ICP-OES.)	mg/kg	2	n.d.	-
銻 (Sb) (Antimony (Sb)) (CAS No.: 7440-36-0)	參考US EPA 3052: 1996，以感應耦合電漿發射光譜儀分析。(With reference to US EPA 3052: 1996, analysis was performed by ICP-OES.)	mg/kg	2	n.d.	-
全氟辛烷磺酸及其鹽類 (PFOS and its salts) (Perfluorooctane sulfonates and its salts (PFOS and its salts)) (CAS No.: 1763-23-1 and its salts)	修改EN 17681-1: 2025，以液相層析串聯質譜儀分析。(Modified EN 17681-1: 2025, analysis was performed by LC/MS/MS.)	mg/kg	0.01	n.d.	-
全氟辛酸及其鹽類 (PFOA and its salts) (Perfluorooctanoic acid and its salts (PFOA and its salts)) (CAS No.: 335-67-1 and its salts)	修改EN 17681-1: 2025，以液相層析串聯質譜儀分析。(Modified EN 17681-1: 2025, analysis was performed by LC/MS/MS.)	mg/kg	0.01	n.d.	-

This document is issued by the Company subject to its General Conditions of Service printed overleaf, available on request or accessible at https://www.sgs.com.tw/terms-of-service and, for electronic format documents, subject to Terms and Conditions for Electronic Documents at https://www.sgs.com.tw/terms-of-service. Attention is drawn to the limitation of liability, indemnification and jurisdiction issues defined therein. Any holder of this document is advised that information contained hereon reflects the Company's findings at the time of its intervention only and within the limits of client's instruction, if any. The Company's sole responsibility is to its Client and this document does not exonerate parties to a transaction from exercising all their rights and obligations under the transaction documents. This document cannot be reproduced, except in full, without prior written approval of the Company. Any unauthorized alteration, forgery or falsification of the content or appearance of this document is unlawful and offenders may be prosecuted to the fullest extent of the law. Unless otherwise stated the results shown in this test report refer only to the sample(s) tested.

鈞寶電子工業股份有限公司 (KING CORE ELECTRONICS INC.)
桃園市平鎮區南豐路269號(平鎮工業區) (NO. 269, NANFONG RD., PINGJHEN DIST., TAOYUAN CITY 324, TAIWAN)

備註(Note)：

1. mg/kg = ppm；0.1wt% = 0.1% = 1000ppm
2. MDL = Method Detection Limit (方法偵測極限值)
3. n.d. = Not Detected (未檢出)；小於MDL / Less than MDL
4. "-" = Not Regulated (無規格值)
5. 除非另有說明，參照ILAC-G8:09/2019決定規則，採用簡單允收規則之二分法(w=0)進行符合性判定；根據此規則，符合性結果之判定係以測試結果與限值做比較。(Unless otherwise stated , the decision rule for conformity reporting is based on Binary Statement for Simple Acceptance Rule (w=0) stated in ILAC-G8:09/2019. According to this rule, the judgement of conformity is based on the comparing test results with limits.)

This document is issued by the Company subject to its General Conditions of Service printed overleaf, available on request or accessible at https://www.sgs.com.tw/terms-of-service and, for electronic format documents, subject to Terms and Conditions for Electronic Documents at https://www.sgs.com.tw/terms-of-service. Attention is drawn to the limitation of liability, indemnification and jurisdiction issues defined therein. Any holder of this document is advised that information contained hereon reflects the Company's findings at the time of its intervention only and within the limits of client's instruction, if any. The Company's sole responsibility is to its Client and this document does not exonerate parties to a transaction from exercising all their rights and obligations under the transaction documents. This document cannot be reproduced, except in full, without prior written approval of the Company. Any unauthorized alteration, forgery or falsification of the content or appearance of this document is unlawful and offenders may be prosecuted to the fullest extent of the law. Unless otherwise stated the results shown in this test report refer only to the sample(s) tested.

鈞寶電子工業股份有限公司 (KING CORE ELECTRONICS INC.)
桃園市平鎮區南豐路269號(平鎮工業區) (NO. 269, NANFONG RD., PINGJHEN DIST., TAOYUAN CITY 324, TAIWAN)

PFAS Remark：

現有PFAS定量技術是分析PFAS物質的特定結構，但同碳數族群之PFAS酸及鹽類物質，其可被辨識的特定結構相同，因此無法區別所分析的特定結構是來自酸或者鹽類，故測試結果為同碳數族群之PFAS之酸及鹽類物質的濃度總合。下表PFAS物質濃度皆已包含在測試結果中，相關資訊請參見下表：(下表列舉PFAS物質僅為範例，並不包含所有同碳數族群之PFAS鹽類。)
(The quantitative technology of PFAS is to analyze the specific structure of PFAS substances. However, PFAS acid and its salts with the same carbon number group have the same specific structure that can be identified. The tested results of the analyzed specific structure cannot be distinguished to identify the contribution from PFAS acid or its salts. Therefore, the tested results display the sum of concentrations of PFAS acids and its salts with the same carbon number group. The concentration of PFAS substances in the below table have been included in the tested results, please refer to the table for relevant information: (The listed PFAS substances are examples only, it do not include all PFAS salts with the same carbon number group.))

群組名稱 (Group Name)	物質名稱 (Substance Name)	CAS No.
PFOS, 及其鹽&衍生物 (PFOS, its salts & derivatives)	全氟辛烷磺酸 (Perfluorooctane sulfonates) (PFOS)	1763-23-1
	全氟辛基磺酸鉀 (PFOS-K) Potassium perfluorooctanesulfonate (PFOS-K)	2795-39-3
	全氟辛基磺酸鋰 (PFOS-Li) Perfluorooctanesulfonic acid, lithium salt (PFOS-Li)	29457-72-5
	全氟辛基磺酸銨 (PFOS-NH_4) Perfluorooctanesulfonic acid, ammonium salt (PFOS-NH_4)	29081-56-9
	全氟辛基磺酸二乙醇銨 (PFOS-NH(C2H4OH)2) Perfluorooctane sulfonate diethanolamine salt (PFOS-NH(C2H4OH)2)	70225-14-8
	全氟辛基磺酸四乙基銨 (PFOS-N(C_2H_5)$_4$) Perfluorooctanesulfonic acid,tetraethylammonium salt (PFOS-N(C_2H_5)$_4$)	56773-42-3
	全氟辛基磺酸二癸二甲基銨 (PFOS-DDA) N-decyl-N,N-dimethyldecan-1-aminium 1,1,2,2,3,3,4,4,5,5,6,6,7,7,8,8,8-heptadecafluorooctane-1-sulfonate (PFOS-DDA)	251099-16-8
	全氟辛基磺酸四丁基銨 (PFOS-N(C_4H_9)$_4$) TetrabutylAmmonium perfluorooctanesulfonate (PFOS-N(C_4H_9)$_4$)	111873-33-7
	全氟辛基磺醯氟 (POSF) Perfluorooctane sulfonyl fluoride (POSF)	307-35-7
	全氟辛基磺酸鎂 (PFOS-Mg) Perfluorooctanesulfonic acid, magnesium salt (PFOS-Mg)	91036-71-4
	全氟辛基磺酸鈉 (PFOS-Na) Perfluorooctanesulfonic acid, sodium salt (PFOS-Na)	4021-47-0

This document is issued by the Company subject to its General Conditions of Service printed overleaf, available on request or accessible at https://www.sgs.com.tw/terms-of-service and, for electronic format documents, subject to Terms and Conditions for Electronic Documents at https://www.sgs.com.tw/terms-of-service. Attention is drawn to the limitation of liability, indemnification and jurisdiction issues defined therein. Any holder of this document is advised that information contained hereon reflects the Company's findings at the time of its intervention only and within the limits of client's instruction, if any. The Company's sole responsibility is to its Client and this document does not exonerate parties to a transaction from exercising all their rights and obligations under the transaction documents. This document cannot be reproduced, except in full, without prior written approval of the Company. Any unauthorized alteration, forgery or falsification of the content or appearance of this document is unlawful and offenders may be prosecuted to the fullest extent of the law. Unless otherwise stated the results shown in this test report refer only to the sample(s) tested.

鈞寶電子工業股份有限公司 (KING CORE ELECTRONICS INC.)
桃園市平鎮區南豐路269號(平鎮工業區) (NO. 269, NANFONG RD., PINGJHEN DIST., TAOYUAN CITY 324, TAIWAN)

群組名稱 (Group Name)	物質名稱 (Substance Name)	CAS No.
PFOS, 及其鹽&衍生物 (PFOS, its salts & derivatives)	全氟辛烷磺酸哌啶 Piperidine 1,1,2,2,3,3,4,4,5,5,6,6,7,7,8,8,8-heptadecafluorooctanesulfonate	71463-74-6
	全氟辛烷磺酸鹽 Perfluorooctanesulfonate (anion)	45298-90-6
	全氟辛烷磺酸與 N,N-二乙基乙胺 (1:1) (PFOS-NH(C_2H_5)$_3$) 1-Octanesulfonic acid, 1,1,2,2,3,3,4,4,5,5,6,6,7,7,8,8,8-heptadecafluoro-, compd. with N,N-diethylethanamine (1:1) (PFOS-NH(C_2H_5)$_3$)	54439-46-2
	N,N,N-三甲基-1,1,2,2,3,3,4,4,5,5,6,6,7,7,8,8,8-十七氟-1-辛烷磺酸甲銨(1:1) (PFOS-N(CH_3)$_4$) Methanaminium, N,N,N-trimethyl-, 1,1,2,2,3,3,4,4,5,5,6,6,7,7,8,8,8-heptadecafluoro-1-octanesulfonate (1:1) (PFOS-N(CH_3)$_4$)	56773-44-5
	1-五胺，N,N,N-三丙基-, 1,1,2,2,3,3,4,4,5,5,6,6,7,7,8,8,8-十七氟-1 -辛烷磺酸鹽(1:1) (PFOS-N(C_3H_7)$_3$(C_5H_{11})) 1-Pentanaminium, N,N,N-tripropyl-, 1,1,2,2,3,3,4,4,5,5,6,6,7,7,8,8,8-heptadecafluoro-1-octanesulfonate (1:1) (PFOS-N(C_3H_7)$_3$(C_5H_{11}))	56773-56-9
	1-丁銨，N,N-二丁基-N-甲基-，1,1,2,2,3,3,4,4,5,5,6,6,7,7,8,8,8-十七氟-1-辛烷磺酸鹽 (1:1) (PFOS-N(C_4H_9)$_3$(CH_3)) 1-Butanaminium, N,N-dibutyl-N-methyl-, 1,1,2,2,3,3,4,4,5,5,6,6,7,7,8,8,8-heptadecafluoro-1-octanesulfonate (1:1) (PFOS-N(C_4H_9)$_3$(CH_3))	124472-68-0
	碘鎓，雙[4-(1,1-二甲基乙基)苯基]-，1,1,2,2,3,3,4,4,5,5,6,6,7,7,8,8,8 -十七氟-1-辛烷磺酸鹽 (1:1) Iodonium, bis[4-(1,1-dimethylethyl)phenyl]-, 1,1,2,2,3,3,4,4,5,5,6,6,7,7,8,8,8-heptadecafluoro-1-octanesulfonate (1:1)	213740-80-8
	二苯基鋶(2,4,6-三甲基苯基)-, 1,1,2,2,3,3,4,4,5,5,6,6,7,7,8,8 ,8-十七氟- 1-辛烷磺酸鹽 (1:1) Sulfonium, diphenyl(2,4,6-trimethylphenyl)-, 1,1,2,2,3,3,4,4,5,5,6,6,7,7,8,8,8-heptadecafluoro-1-octanesulfonate (1:1)	258341-99-0
	吡啶鎓，1-十六烷基-，1,1,2,2,3,3,4,4,5,5,6,6,7,7,8,8,8-十七氟-1 -辛烷磺酸鹽 (1:1) Pyridinium, 1-hexadecyl-, 1,1,2,2,3,3,4,4,5,5,6,6,7,7,8,8,8-heptadecafluoro-1-octanesulfonate (1:1)	334529-63-4

This document is issued by the Company subject to its General Conditions of Service printed overleaf, available on request or accessible at https://www.sgs.com.tw/terms-of-service and, for electronic format documents, subject to Terms and Conditions for Electronic Documents at https://www.sgs.com.tw/terms-of-service. Attention is drawn to the limitation of liability, indemnification and jurisdiction issues defined therein. Any holder of this document is advised that information contained hereon reflects the Company's findings at the time of its intervention only and within the limits of client's instruction, if any. The Company's sole responsibility is to its Client and this document does not exonerate parties to a transaction from exercising all their rights and obligations under the transaction documents. This document cannot be reproduced, except in full, without prior written approval of the Company. Any unauthorized alteration, forgery or falsification of the content or appearance of this document is unlawful and offenders may be prosecuted to the fullest extent of the law. Unless otherwise stated the results shown in this test report refer only to the sample(s) tested.

鈞寶電子工業股份有限公司 (KING CORE ELECTRONICS INC.)
桃園市平鎮區南豐路269號(平鎮工業區) (NO. 269, NANFONG RD., PINGJHEN DIST., TAOYUAN CITY 324, TAIWAN)

群組名稱 (Group Name)	物質名稱 (Substance Name)	CAS No.
PFOS, 及其鹽&衍生物 (PFOS, its salts & derivatives)	1-癸胺，N,N,N-三乙基-，1,1,2,2,3,3,4,4,5,5,6,6,7,7,8,8,8-十七氟-1 -辛烷磺酸鹽(1:1) 1-Decanaminium, N,N,N-triethyl-, 1,1,2,2,3,3,4,4,5,5,6,6,7,7,8,8,8-heptadecafluoro-1-octanesulfonate (1:1)	773895-92-4
	全氟辛烷磺酸四丁基鏻 (PFOS-P(C_4H_9)$_4$)) Tetrabutylphosphonium perfluorooctane sulfonate (PFOS-P(C_4H_9)$_4$))	2185049-59-4
	全氟辛烷磺酸二乙胺鹽 (PFOS-$C_4H_{11}N$) Perfluorooctanesulfonic acid diethylamine salt (PFOS-$C_4H_{11}N$)	2205029-08-7
	庚基二甲基{2-[(2-甲基丙-2-烯酰基)氧基]乙基}全氟辛烷磺酸氮紮鹽 (PFOS-$C_{15}H_{30}NO_2$) Heptyldimethyl{2-[(2-methylprop-2-enoyl)oxy]ethyl}azanium perfluorooctanesulfonate (PFOS-$C_{15}H_{30}NO_2$)	1203998-97-3
	1-辛烷磺酸，1,1,2,2,3,3,4,4,5,5,6,6,7,7,8,8,8-十七氟-,1,1' -酸酐 (PFOSAN) 1-Octanesulfonic acid, 1,1,2,2,3,3,4,4,5,5,6,6,7,7,8,8,8-heptadecafluoro-, 1,1'-anhydride (PFOSAN)	423-92-7
	全氟辛基磺醯氯(PFOS-Cl) Perfluoro-1-octanesulfonyl chloride (PFOS-Cl)	423-60-9
PFOA, 及其鹽&衍生物 (PFOA, its salts & derivatives)	全氟辛酸 (Perfluorooctanoic acid) (PFOA)	335-67-1
	全氟辛酸鈉 (PFOA-Na) Sodium perfluorooctanoate (PFOA-Na)	335-95-5
	全氟辛酸鉀 (PFOA-K) Potassium perfluorooctanoate (PFOA-K)	2395-00-8
	全氟辛酸銀 (PFOA-Ag) Silver perfluorooctanote (PFOA-Ag)	335-93-3
	全氟辛氟 (PFOA-F) Perfluorooctanoyl fluoride (PFOA-F)	335-66-0

This document is issued by the Company subject to its General Conditions of Service printed overleaf, available on request or accessible at https://www.sgs.com.tw/terms-of-service and, for electronic format documents, subject to Terms and Conditions for Electronic Documents at https://www.sgs.com.tw/terms-of-service. Attention is drawn to the limitation of liability, indemnification and jurisdiction issues defined therein. Any holder of this document is advised that information contained hereon reflects the Company's findings at the time of its intervention only and within the limits of client's instruction, if any. The Company's sole responsibility is to its Client and this document does not exonerate parties to a transaction from exercising all their rights and obligations under the transaction documents. This document cannot be reproduced, except in full, without prior written approval of the Company. Any unauthorized alteration, forgery or falsification of the content or appearance of this document is unlawful and offenders may be prosecuted to the fullest extent of the law. Unless otherwise stated the results shown in this test report refer only to the sample(s) tested.

鈞寶電子工業股份有限公司 (KING CORE ELECTRONICS INC.)
桃園市平鎮區南豐路269號(平鎮工業區) (NO. 269, NANFONG RD., PINGJHEN DIST., TAOYUAN CITY 324, TAIWAN)

群組名稱 (Group Name)	物質名稱 (Substance Name)	CAS No.
PFOA, 及其鹽&衍生物 (PFOA, its salts & derivatives)	全氟辛酸銨 (APFO) Ammonium pentadecafluorooctanoate (APFO)	3825-26-1
	全氟辛酸鋰 (PFOA-Li) Lithium perfluorooctanoate (PFOA-Li)	17125-58-5
	全氟辛酸鈷 (PFOA-Co) Cobalt perfluorooctanoate (PFOA-Co)	35965-01-6
	全氟辛酸銫 (PFOA-Cs) Cesium perfluorooctanoate (PFOA-Cs)	17125-60-9
	全氟辛酸鉻 (PFOA-Cr(3^+)) Octanoic acid, 2,2,3,3,4,4,5,5,6,6,7,7,8,8,8-pentadecafluoro-, chromium(3+) (PFOA-Cr(3^+))	68141-02-6
	全氟辛酸-哌嗪(2:1) PFOA-NH($C_4H_{10}N$) Pentadecafluorooctanoic acid--piperazine (2/1)PFOA-NH($C_4H_{10}N$)	423-52-9
	全氟辛酸鹽 Pentadecafluorooctanoate (anion)	45285-51-6
	全氟辛酸酐 Perfluorooctanoic Anhydride	33496-48-9
	乙銨，N,N,N-三乙基-, 2,2,3,3,4,4,5,5,6,6,7,7,8,8,8-十五氟辛酸(1:1) Ethanaminium, N,N,N-triethyl-, 2,2,3,3,4,4,5,5,6,6,7,7,8,8,8-pentadecafluorooctanoate (1:1)	98241-25-9
	全氟辛酸四甲銨鹽 Tetramethylammoniumperfluoroctanoat	32609-65-7
	1-丙銨，N,N,N-三丙基-, 2,2,3,3,4,4,5,5,6,6,7,7,8,8,8-十五氟辛酸(1:1) 1-Propanaminium, N,N,N-tripropyl-, 2,2,3,3,4,4,5,5,6,6,7,7,8,8,8-pentadecafluorooctanoate (1:1)	277749-00-5
	辛酸，2,2,3,3,4,4,5,5,6,6,7,7,8,8,8-十五氟-鉀鹽，水合物 (1:1:2) (PFOA-K(H_2O)$_2$) Octanoic acid, 2,2,3,3,4,4,5,5,6,6,7,7,8,8,8-pentadecafluoro-, potassium salt, hydrate (1:1:2) (PFOA-K(H_2O)$_2$)	98065-31-7

This document is issued by the Company subject to its General Conditions of Service printed overleaf, available on request or accessible at https://www.sgs.com.tw/terms-of-service and, for electronic format documents, subject to Terms and Conditions for Electronic Documents at https://www.sgs.com.tw/terms-of-service. Attention is drawn to the limitation of liability, indemnification and jurisdiction issues defined therein. Any holder of this document is advised that information contained hereon reflects the Company's findings at the time of its intervention only and within the limits of client's instruction, if any. The Company's sole responsibility is to its Client and this document does not exonerate parties to a transaction from exercising all their rights and obligations under the transaction documents. This document cannot be reproduced, except in full, without prior written approval of the Company. Any unauthorized alteration, forgery or falsification of the content or appearance of this document is unlawful and offenders may be prosecuted to the fullest extent of the law. Unless otherwise stated the results shown in this test report refer only to the sample(s) tested.

鈞寶電子工業股份有限公司 (KING CORE ELECTRONICS INC.)
桃園市平鎮區南豐路269號(平鎮工業區) (NO. 269, NANFONG RD., PINGJHEN DIST., TAOYUAN CITY 324, TAIWAN)

群組名稱 (Group Name)	物質名稱 (Substance Name)	CAS No.
PFOA, 及其鹽&衍生物 (PFOA, its salts & derivatives)	辛酸，2,2,3,3,4,4,5,5,6,6,7,7,8,8,8-十五氟-，化合物。與乙胺 (1:1) (PFOA-C_2H_7N) Octanoic acid, 2,2,3,3,4,4,5,5,6,6,7,7,8,8,8-pentadecafluoro-, compd. with ethanamine (1:1) (PFOA-C_2H_7N)	1376936-03-6
	十五氟辛酸化合物與吡啶 (1:1) (9CI) (PFOA-C_5H_5N) Octanoic acid, pentadecafluoro-, compd. with pyridine (1:1) (9CI) (PFOA-C_5H_5N)	95658-47-2
	十五氟辛酸-1-苯基哌嗪(1:1) (PFOA-$C_{10}H_{14}N_2$) Pentadecafluorooctanoic acid- 1-phenylpiperazine(1:1) (PFOA-$C_{10}H_{14}N_2$)	1514-68-7
	1-辛胺，N,N,N-三甲基-，2,2,3,3,4,4,5,5,6,6,7,7,8,8,8-十五氟辛酸(1:1) (PFOA- $C_{11}H_{26}N$) 1-Octanaminium, N,N,N-trimethyl-, 2,2,3,3,4,4,5,5,6,6,7,7,8,8,8-pentadecafluorooctanoate (1:1) (PFOA- $C_{11}H_{26}N$)	927835-01-6
	全氟辛醯氯 (PFOA-Cl) Pentadecafluorooctanoyl chloride (PFOA-Cl)	335-64-8
	全氟辛醯溴 (PFOA-Br) Perfluorooctanoyl Bromide (PFOA-Br)	222037-87-8

This document is issued by the Company subject to its General Conditions of Service printed overleaf, available on request or accessible at https://www.sgs.com.tw/terms-of-service and, for electronic format documents, subject to Terms and Conditions for Electronic Documents at https://www.sgs.com.tw/terms-of-service. Attention is drawn to the limitation of liability, indemnification and jurisdiction issues defined therein. Any holder of this document is advised that information contained hereon reflects the Company's findings at the time of its intervention only and within the limits of client's instruction, if any. The Company's sole responsibility is to its Client and this document does not exonerate parties to a transaction from exercising all their rights and obligations under the transaction documents. This document cannot be reproduced, except in full, without prior written approval of the Company. Any unauthorized alteration, forgery or falsification of the content or appearance of this document is unlawful and offenders may be prosecuted to the fullest extent of the law. Unless otherwise stated the results shown in this test report refer only to the sample(s) tested.

鈞寶電子工業股份有限公司 (KING CORE ELECTRONICS INC.)
桃園市平鎮區南豐路269號(平鎮工業區) (NO. 269, NANFONG RD., PINGJHEN DIST., TAOYUAN CITY 324, TAIWAN)

重金屬流程圖 / Analytical flow chart of heavy metal

根據以下的流程圖之條件，樣品已完全溶解。（六價鉻測試方法除外）

These samples were dissolved totally by pre-conditioning method according to below flow chart.

（Cr^{6+} test method excluded）

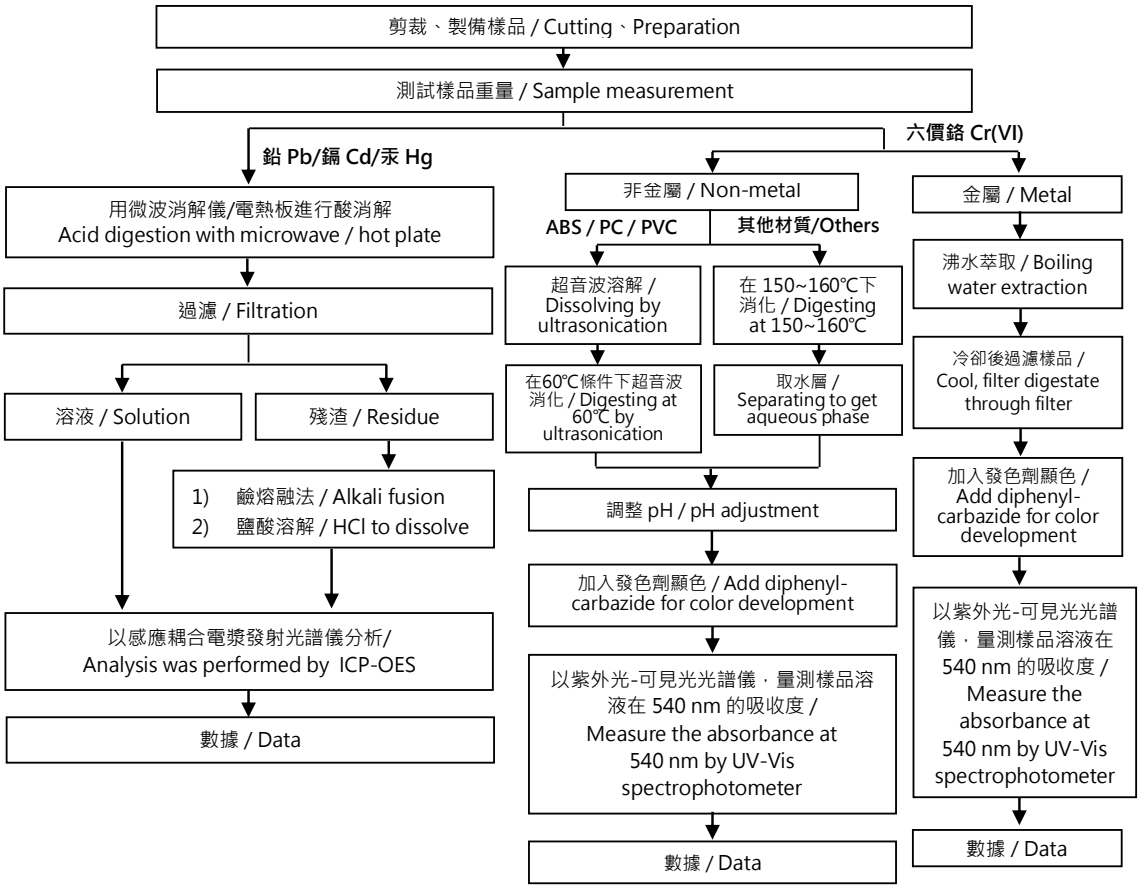

This document is issued by the Company subject to its General Conditions of Service printed overleaf, available on request or accessible at https://www.sgs.com.tw/terms-of-service and, for electronic format documents, subject to Terms and Conditions for Electronic Documents at https://www.sgs.com.tw/terms-of-service. Attention is drawn to the limitation of liability, indemnification and jurisdiction issues defined therein. Any holder of this document is advised that information contained hereon reflects the Company's findings at the time of its intervention only and within the limits of client's instruction, if any. The Company's sole responsibility is to its Client and this document does not exonerate parties to a transaction from exercising all their rights and obligations under the transaction documents. This document cannot be reproduced, except in full, without prior written approval of the Company. Any unauthorized alteration, forgery or falsification of the content or appearance of this document is unlawful and offenders may be prosecuted to the fullest extent of the law. Unless otherwise stated the results shown in this test report refer only to the sample(s) tested.

鈞寶電子工業股份有限公司 (KING CORE ELECTRONICS INC.)
桃園市平鎮區南豐路269號(平鎮工業區) (NO. 269, NANFONG RD., PINGJHEN DIST., TAOYUAN CITY 324, TAIWAN)

多溴聯苯/多溴聯苯醚分析流程圖 / Analytical flow chart - PBBs/PBDEs

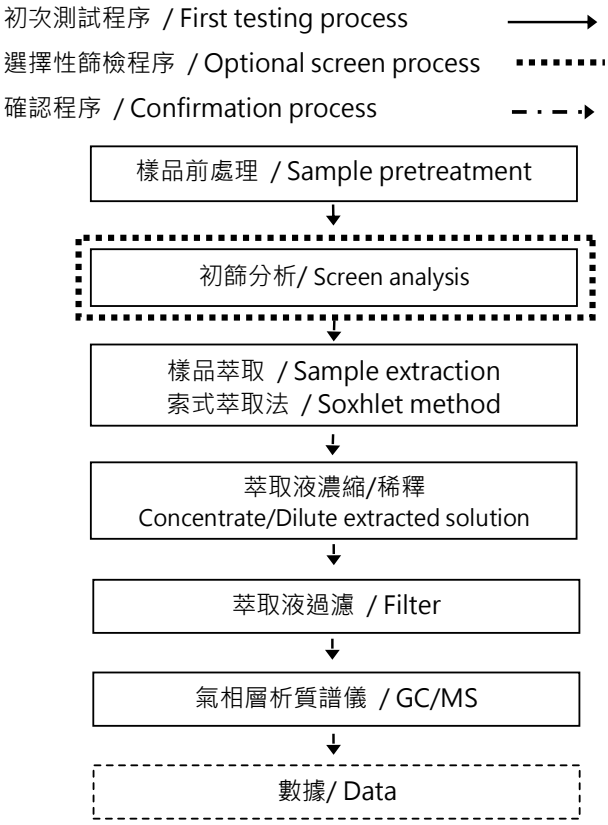

This document is issued by the Company subject to its General Conditions of Service printed overleaf, available on request or accessible at https://www.sgs.com.tw/terms-of-service and, for electronic format documents, subject to Terms and Conditions for Electronic Documents at https://www.sgs.com.tw/terms-of-service. Attention is drawn to the limitation of liability, indemnification and jurisdiction issues defined therein. Any holder of this document is advised that information contained hereon reflects the Company's findings at the time of its intervention only and within the limits of client's instruction, if any. The Company's sole responsibility is to its Client and this document does not exonerate parties to a transaction from exercising all their rights and obligations under the transaction documents. This document cannot be reproduced, except in full, without prior written approval of the Company. Any unauthorized alteration, forgery or falsification of the content or appearance of this document is unlawful and offenders may be prosecuted to the fullest extent of the law. Unless otherwise stated the results shown in this test report refer only to the sample(s) tested.

鈞寶電子工業股份有限公司 (KING CORE ELECTRONICS INC.)
桃園市平鎮區南豐路269號(平鎮工業區) (NO. 269, NANFONG RD., PINGJHEN DIST., TAOYUAN CITY 324, TAIWAN)

可塑劑分析流程圖 / Analytical flow chart - Phthalate

【測試方法/Test method: IEC 62321-8】

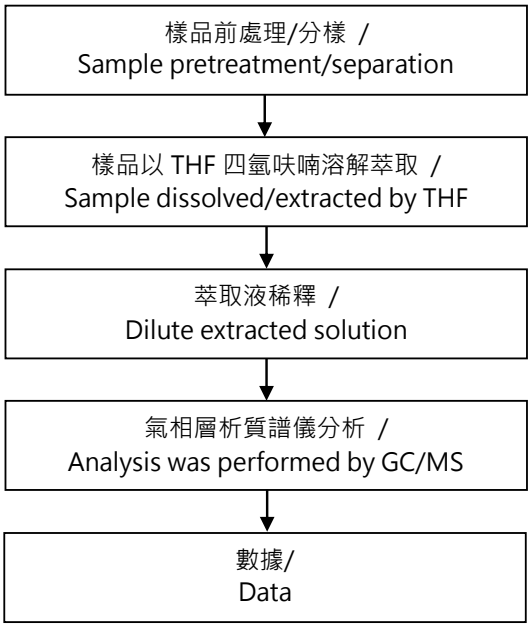

This document is issued by the Company subject to its General Conditions of Service printed overleaf, available on request or accessible at https://www.sgs.com.tw/terms-of-service and, for electronic format documents, subject to Terms and Conditions for Electronic Documents at https://www.sgs.com.tw/terms-of-service. Attention is drawn to the limitation of liability, indemnification and jurisdiction issues defined therein. Any holder of this document is advised that information contained hereon reflects the Company's findings at the time of its intervention only and within the limits of client's instruction, if any. The Company's sole responsibility is to its Client and this document does not exonerate parties to a transaction from exercising all their rights and obligations under the transaction documents. This document cannot be reproduced, except in full, without prior written approval of the Company. Any unauthorized alteration, forgery or falsification of the content or appearance of this document is unlawful and offenders may be prosecuted to the fullest extent of the law. Unless otherwise stated the results shown in this test report refer only to the sample(s) tested.

鈞寶電子工業股份有限公司 (KING CORE ELECTRONICS INC.)
桃園市平鎮區南豐路269號(平鎮工業區) (NO. 269, NANFONG RD., PINGJHEN DIST., TAOYUAN CITY 324, TAIWAN)

六溴環十二烷分析流程圖 / Analytical flow chart - HBCDD

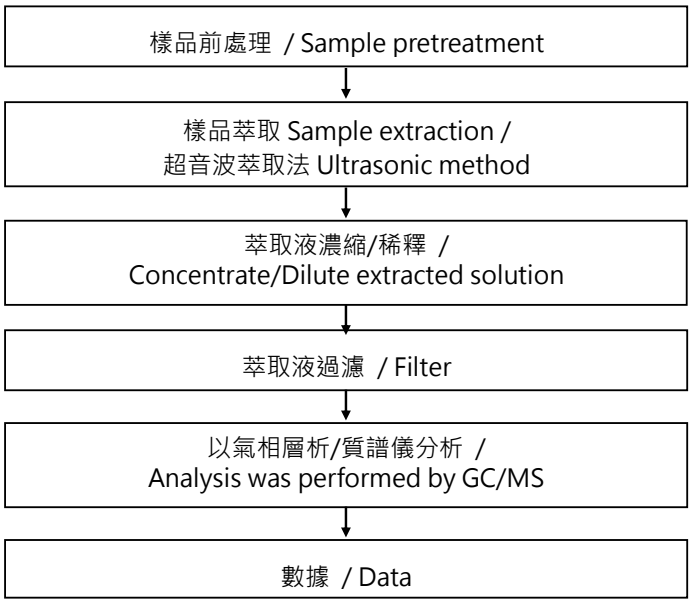

This document is issued by the Company subject to its General Conditions of Service printed overleaf, available on request or accessible at https://www.sgs.com.tw/terms-of-service and, for electronic format documents, subject to Terms and Conditions for Electronic Documents at https://www.sgs.com.tw/terms-of-service. Attention is drawn to the limitation of liability, indemnification and jurisdiction issues defined therein. Any holder of this document is advised that information contained hereon reflects the Company's findings at the time of its intervention only and within the limits of client's instruction, if any. The Company's sole responsibility is to its Client and this document does not exonerate parties to a transaction from exercising all their rights and obligations under the transaction documents. This document cannot be reproduced, except in full, without prior written approval of the Company. Any unauthorized alteration, forgery or falsification of the content or appearance of this document is unlawful and offenders may be prosecuted to the fullest extent of the law. Unless otherwise stated the results shown in this test report refer only to the sample(s) tested.

鈞寶電子工業股份有限公司 (KING CORE ELECTRONICS INC.)
桃園市平鎮區南豐路269號(平鎮工業區) (NO. 269, NANFONG RD., PINGJHEN DIST., TAOYUAN CITY 324, TAIWAN)

鹵素分析流程圖 / Analytical flow chart - Halogen

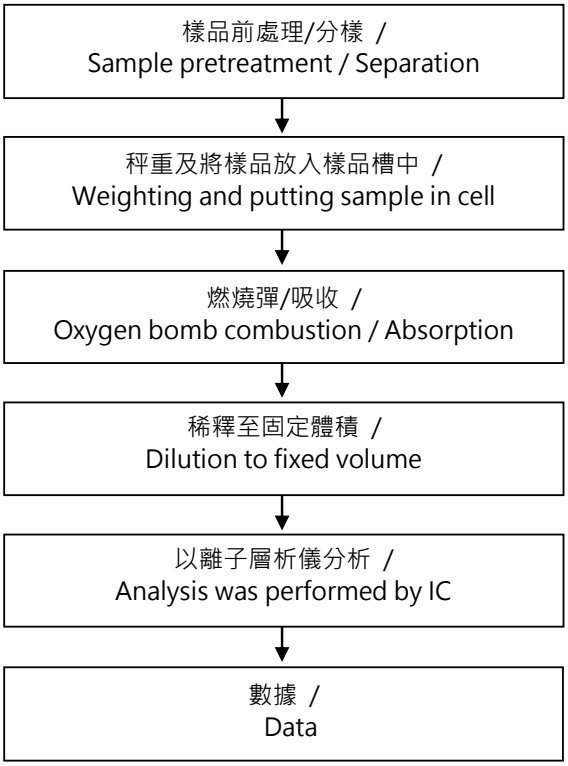

This document is issued by the Company subject to its General Conditions of Service printed overleaf, available on request or accessible at https://www.sgs.com.tw/terms-of-service and, for electronic format documents, subject to Terms and Conditions for Electronic Documents at https://www.sgs.com.tw/terms-of-service. Attention is drawn to the limitation of liability, indemnification and jurisdiction issues defined therein. Any holder of this document is advised that information contained hereon reflects the Company's findings at the time of its intervention only and within the limits of client's instruction, if any. The Company's sole responsibility is to its Client and this document does not exonerate parties to a transaction from exercising all their rights and obligations under the transaction documents. This document cannot be reproduced, except in full, without prior written approval of the Company. Any unauthorized alteration, forgery or falsification of the content or appearance of this document is unlawful and offenders may be prosecuted to the fullest extent of the law. Unless otherwise stated the results shown in this test report refer only to the sample(s) tested.

鈞寶電子工業股份有限公司 (KING CORE ELECTRONICS INC.)
桃園市平鎮區南豐路269號(平鎮工業區) (NO. 269, NANFONG RD., PINGJHEN DIST., TAOYUAN CITY 324, TAIWAN)

元素(含重金屬)分析流程圖 / Analytical flow chart of elements (Heavy metal included)

根據以下的流程圖之條件，樣品已完全溶解。

These samples were dissolved totally by pre-conditioning method according to below flow chart.

【參考方法/Reference method：US EPA 3051A、US EPA 3052】

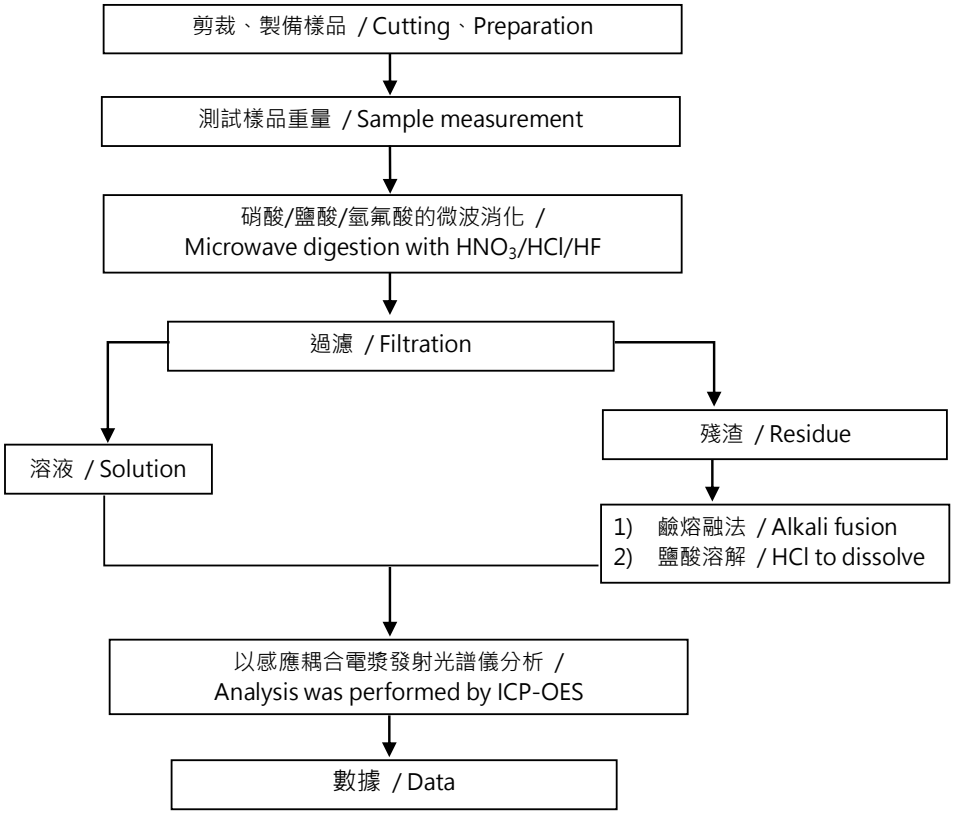

* US EPA 3051A 方法未添加氫氟酸 / US EPA 3051A method does not add HF.

This document is issued by the Company subject to its General Conditions of Service printed overleaf, available on request or accessible at https://www.sgs.com.tw/terms-of-service and, for electronic format documents, subject to Terms and Conditions for Electronic Documents at https://www.sgs.com.tw/terms-of-service. Attention is drawn to the limitation of liability, indemnification and jurisdiction issues defined therein. Any holder of this document is advised that information contained hereon reflects the Company's findings at the time of its intervention only and within the limits of client's instruction, if any. The Company's sole responsibility is to its Client and this document does not exonerate parties to a transaction from exercising all their rights and obligations under the transaction documents. This document cannot be reproduced, except in full, without prior written approval of the Company. Any unauthorized alteration, forgery or falsification of the content or appearance of this document is unlawful and offenders may be prosecuted to the fullest extent of the law. Unless otherwise stated the results shown in this test report refer only to the sample(s) tested.

鈞寶電子工業股份有限公司 (KING CORE ELECTRONICS INC.)
桃園市平鎮區南豐路269號(平鎮工業區) (NO. 269, NANFONG RD., PINGJHEN DIST., TAOYUAN CITY 324, TAIWAN)

全氟化合物(包含全氟辛酸/全氟辛烷磺酸/其相關化合物等等)分析流程圖 / Analytical flow chart – PFAS (including PFOA/PFOS/its related compound, etc.)

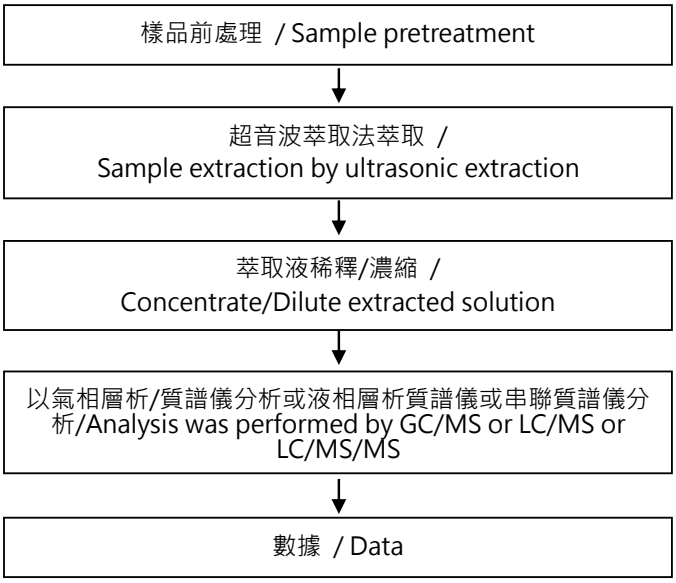

This document is issued by the Company subject to its General Conditions of Service printed overleaf, available on request or accessible at https://www.sgs.com.tw/terms-of-service and, for electronic format documents, subject to Terms and Conditions for Electronic Documents at https://www.sgs.com.tw/terms-of-service. Attention is drawn to the limitation of liability, indemnification and jurisdiction issues defined therein. Any holder of this document is advised that information contained hereon reflects the Company's findings at the time of its intervention only and within the limits of client's instruction, if any. The Company's sole responsibility is to its Client and this document does not exonerate parties to a transaction from exercising all their rights and obligations under the transaction documents. This document cannot be reproduced, except in full, without prior written approval of the Company. Any unauthorized alteration, forgery or falsification of the content or appearance of this document is unlawful and offenders may be prosecuted to the fullest extent of the law. Unless otherwise stated the results shown in this test report refer only to the sample(s) tested.

鈞寶電子工業股份有限公司 (KING CORE ELECTRONICS INC.)
桃園市平鎮區南豐路269號(平鎮工業區) (NO. 269, NANFONG RD., PINGJHEN DIST., TAOYUAN CITY 324, TAIWAN)

*** 照片中如有箭頭標示，則表示為實際檢測之樣品/部位. ***
(The tested sample / part is marked by an arrow if it's shown on the photo.)

ETR26204665

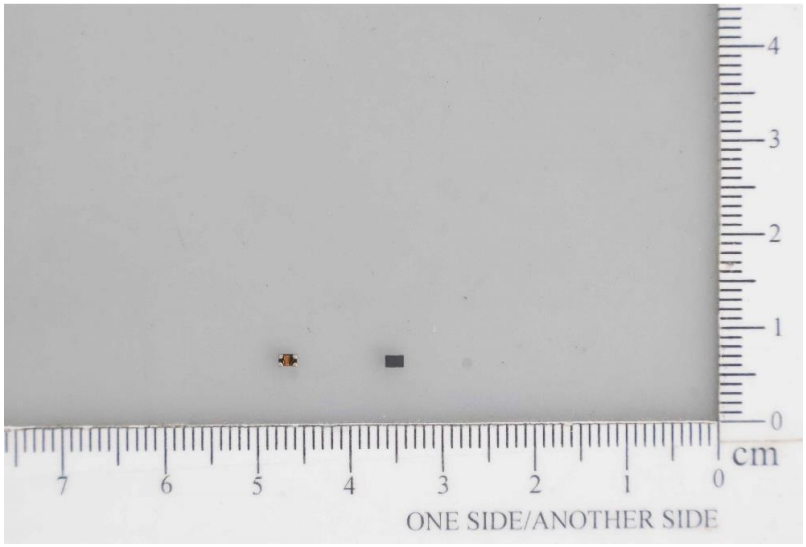

** 報告結尾 (End of Report) **

This document is issued by the Company subject to its General Conditions of Service printed overleaf, available on request or accessible at https://www.sgs.com.tw/terms-of-service and, for electronic format documents, subject to Terms and Conditions for Electronic Documents at https://www.sgs.com.tw/terms-of-service. Attention is drawn to the limitation of liability, indemnification and jurisdiction issues defined therein. Any holder of this document is advised that information contained hereon reflects the Company's findings at the time of its intervention only and within the limits of client's instruction, if any. The Company's sole responsibility is to its Client and this document does not exonerate parties to a transaction from exercising all their rights and obligations under the transaction documents. This document cannot be reproduced, except in full, without prior written approval of the Company. Any unauthorized alteration, forgery or falsification of the content or appearance of this document is unlawful and offenders may be prosecuted to the fullest extent of the law. Unless otherwise stated the results shown in this test report refer only to the sample(s) tested.