Doc. Number :

☐ Tentative Specification
☐ Preliminary Specification
■ Approval Specification

MODEL NO.: G238HCJ
SUFFIX: L01

3TFTLCD2310(T0214)

Customer: Common

APPROVED BY **SIGNATURE**

Name / Title _____

Note
Product Version : C3

Please return 1 copy for your confirmation with your signature and comments.

Approved By	Checked By	Prepared By
Matt.Ic.Chen	Sen.Lin	Jack.Pan

copyright belongs to InnoLux. Any unauthorized use is prohibited.

CONTENTS

1. GENERAL DESCRIPTION 5
1.1 OVERVIEW 5
1.2 GENERAL SPECIFICATIONS 5
2. MECHANICAL SPECIFICATIONS 5
3. ABSOLUTE MAXIMUM RATINGS 6
3.1 ABSOLUTE RATINGS OF ENVIRONMENT 6
3.2 ELECTRICAL ABSOLUTE RATINGS 6
3.2.1 TFT LCD MODULE 6
3.2.2 BACKLIGHT UNIT 7
4. ELECTRICAL SPECIFICATIONS 8
4.1 FUNCTION BLOCK DIAGRAM 8
4.2 INTERFACE CONNECTIONS 8
4.3 ELECTRICAL CHARACTERISTICS 10
4.3.1 LCD ELETRONICS SPECIFICATION 10
4.3.2 Vcc POWER DIP CONDITION 12
4.3.3 BACKLIGHT UNIT 12
4.3.4 LIGHTBAR CONNECTOR PIN ASSIGNMENT 13
4.4 LVDS INPUT SIGNAL SPECIFICATIONS 14
4.4.1 LVDS DATA MAPPING TABLE 14
4.4.2 COLOR DATA INPUT ASSIGNMENT 15
4.5 DISPLAY TIMING SPECIFICATIONS 16
4.6 POWER ON/OFF SEQUENCE 18
5. OPTICAL CHARACTERISTICS 19
5.1 TEST CONDITIONS 19
5.2 OPTICAL SPECIFICATIONS 19
6. RELIABILITY TEST ITEM 23
7. PACKAGING 24
7.1 PACKING SPECIFICATIONS 24
7.2 PACKAGING METHOD 24
7.3 UN-PACKAGING METHOD 26
8. INNOLUX MODULE LABEL 27
9. PRECAUTIONS 28
9.1 ASSEMBLY AND HANDLING PRECAUTIONS 28
9.2 STORAGE PRECAUTIONS 28
9.3 OPERATION PRECAUTIONS 28

copyright belongs to InnoLux. Any unauthorized use is prohibited.

9.4 SAFETY PRECAUTIONS 28
9.5 SAFETY STANDARDS 29
9.6 OTHER 29
Appendix. OUTLINE DRAWING 30

copyright belongs to InnoLux. Any unauthorized use is prohibited.

REVISION HISTORY

Version	Date	Section	Description
2.0	2019.4.2	All	Approval Specification was first issued.
2.1	2019.4.8	27	Modified INNOLUX Module Label.
2.2	2020.3.31	16	Modified 4.5 Vtotal value.
2.3	2021.1.19	All	Change Product Version from C1 to C3.
2.4	2021.3.12	29,30	Modified Appendix. Outline Drawing value.
2.5	2022.12.2	6	Add Temperature&Humidity Chart.

copyright belongs to InnoLux. Any unauthorized use is prohibited.

1. GENERAL DESCRIPTION

1.1 OVERVIEW

G238HCJ-L01 is a 23.8” TFT Liquid Crystal Display IAV module with WLED Backlight unit and 30 pins 2ch-LVDS interface. This module supports 1920 x 1080 Full HD mode and can display up to 16.7M colors. The converter module for Backlight is not built in.

1.2 GENERAL SPECIFICATIONS

Item	Specification	Unit	Note
Screen Size	23.8” real diagonal		
Driver Element	a-si TFT active matrix	-	-
Pixel Number	1920 x R.G.B. x 1080	pixel	-
Pixel Pitch	0.2745 (H) x 0.2745 (V)	mm	-
Pixel Arrangement	RGB vertical stripe	-	-
Display Colors	16.7M	color	-
Transmissive Mode	Normally black	-	-
Surface Treatment	AG type, 3H hard coating, Haze 25	-	-
Luminance, White	350	Cd/m2	
Color Gamut	72% of NTSC(Typ.)	-	
Power Consumption	Total 20.922W (Max.) @cell 4.29W (Max.), BL 16.632W(Max.)		(1)

Note (1) The specified power consumption : Total= cell (reference 4.3.1)+BL (reference 4.3.3)

2. MECHANICAL SPECIFICATIONS

Item		Min.	Typ.	Max.	Unit	Note
Module Size	Horizontal (H)	542.5	543	543.5	mm	(1)
	Vertical (V)	316.9	317.4	317.9	mm	
	Thickness (T)	10.6	11.1	11.6	mm	
Bezel Area	Horizontal	529.7	530.2	530.7	mm	
	Vertical	299.1	299.6	300.1	mm	
Active Area	Horizontal		527.04		mm	
	Vertical		296.46		mm	
Weight			2266		g	

Note (1) Please refer to the attached drawings for more information of front and back outline dimensions.

Note (2)

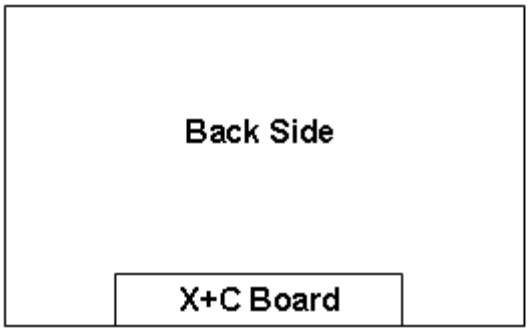

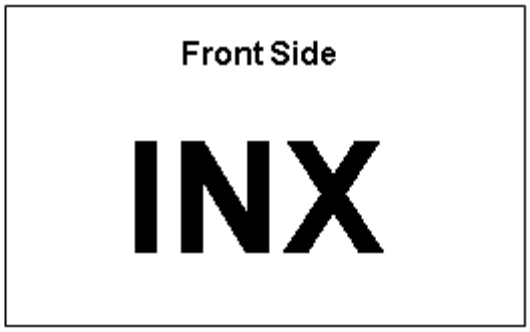

copyright belongs to InnoLux. Any unauthorized use is prohibited.

3. ABSOLUTE MAXIMUM RATINGS

3.1 ABSOLUTE RATINGS OF ENVIRONMENT

Item	Symbol	Value		Unit	Note
		Min.	Max.		
Storage Temperature	TST	-20	60	ºC	(1)
Operating Ambient Temperature	TOP	0	50	ºC	(1), (2)

Note (1) Temperature and relative humidity range is shown in the figure below

(a) 90 %RH Max.

(b) Wet-bulb temperature should be 39 ºC Max.

(c) No condensation.

Note (2) The absolute maximum rating values of this product are not allowed to be exceeded at any times. The module should not be used over the absolute maximum rating values.It will cause permanently unrecoverable function fail in such an condition.

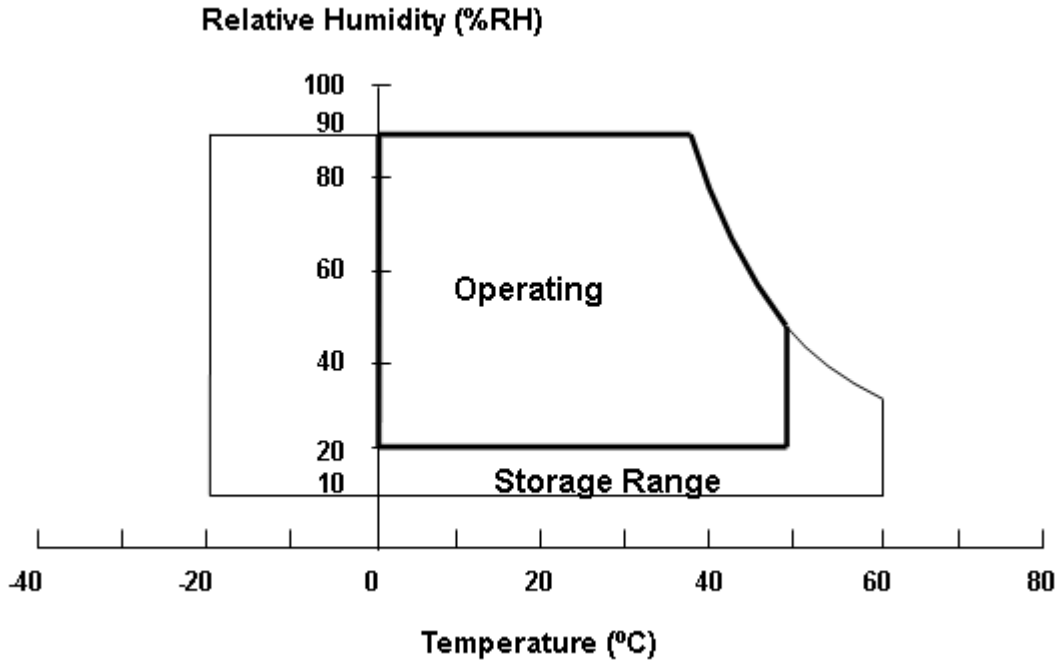

3.2 ELECTRICAL ABSOLUTE RATINGS

3.2.1 TFT LCD MODULE

Item	Symbol	Value		Unit	Note
		Min.	Max.		
Power Supply Voltage	VCCS	-0.3	6.0	V	(1)
Logic Input Voltage	V_{IN}	-0.3	3.6	V	

copyright belongs to InnoLux. Any unauthorized use is prohibited.

3.2.2 BACKLIGHT UNIT

Item	Symbol	Value			Unit	Note
		Min.	Typ	Max.		
LED Forward Current Per Input Pin	I_F	0	70	73.5	mA	(1), (2) Duty=100%
LED Pulse Forward Current Per Input Pin	I_P	---	---	500	mA	(1), (2) Pulse Width≦10msec. and Duty≦25%

Note (1) Permanent damage to the device may occur if maximum values are exceeded. Function operation should be restricted to the conditions described under Normal Operating Conditions.

Note (2) Specified values are for input pin of LED light bar at Ta=25±2 ℃ (Refer to 4.3.3 and 4.3.4 for further information).

copyright belongs to InnoLux. Any unauthorized use is prohibited.

4. ELECTRICAL SPECIFICATIONS

4.1 FUNCTION BLOCK DIAGRAM

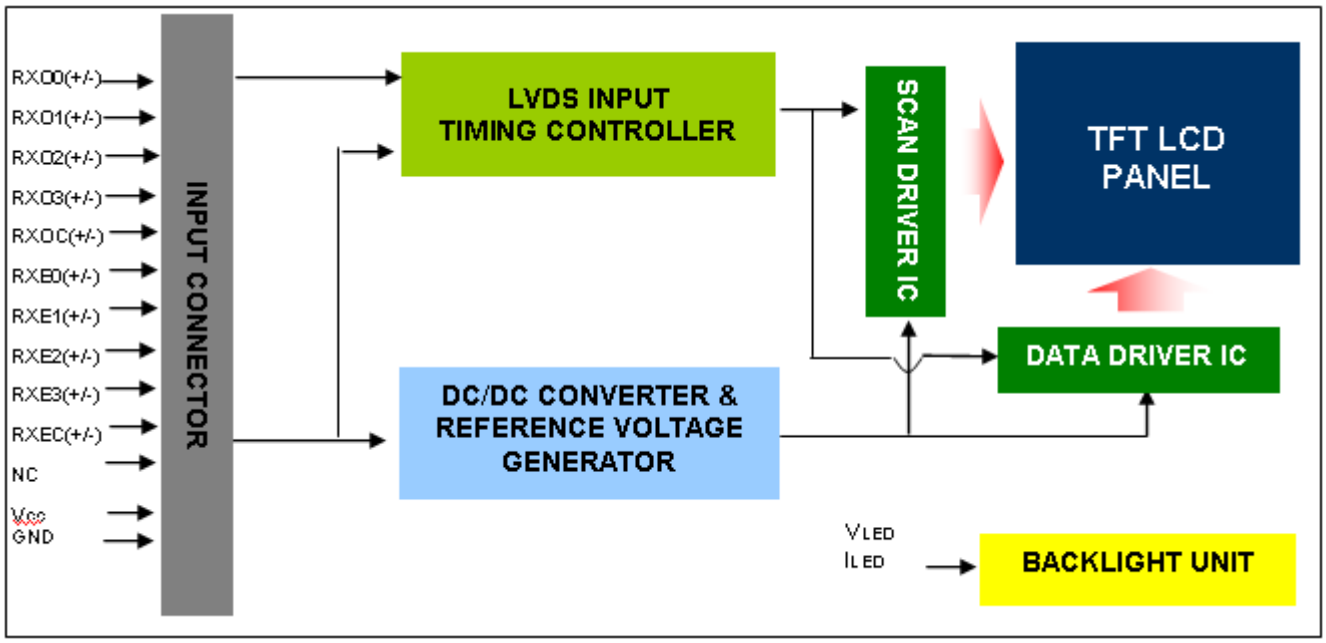

4.2 INTERFACE CONNECTIONS

PIN ASSIGNMENT

Pin	Name	Description
1	RXO0-	Negative LVDS differential data input. Channel O0 (odd)
2	RXO0+	Positive LVDS differential data input. Channel O0 (odd)
3	RXO1-	Negative LVDS differential data input. Channel O1 (odd)
4	RXO1+	Positive LVDS differential data input. Channel O1 (odd)
5	RXO2-	Negative LVDS differential data input. Channel O2 (odd)
6	RXO2+	Positive LVDS differential data input. Channel O2 (odd)
7	GND	Ground
8	RXOC-	Negative LVDS differential clock input. (odd)
9	RXOC+	Positive LVDS differential clock input. (odd)
10	RXO3-	Negative LVDS differential data input. Channel O3(odd)
11	RXO3+	Positive LVDS differential data input. Channel O3 (odd)
12	RXE0-	Negative LVDS differential data input. Channel E0 (even)
13	RXE0+	Positive LVDS differential data input. Channel E0 (even)
14	GND	Ground
15	RXE1-	Negative LVDS differential data input. Channel E1 (even)
16	RXE1+	Positive LVDS differential data input. Channel E1 (even)
17	GND	Ground
18	RXE2-	Negative LVDS differential data input. Channel E2 (even)
19	RXE2+	Positive LVDS differential data input. Channel E2 (even)
20	RXEC-	Negative LVDS differential clock input. (even)
21	RXEC+	Positive LVDS differential clock input. (even)
22	RXE3-	Negative LVDS differential data input. Channel E3 (even)
23	RXE3+	Positive LVDS differential data input. Channel E3 (even)
24	GND	Ground
25	NC	For LCD internal use only, Do not connect

copyright belongs to InnoLux. Any unauthorized use is prohibited.

Pin	Name	Description
26	NC	For LCD internal use only, Do not connect
27	NC	For LCD internal use only, Do not connect
28	Vcc	+5.0V power supply
29	Vcc	+5.0V power supply
30	Vcc	+5.0V power supply

Note (1) Connector Part No.:

Foxconn ; GS23301-0321R-7H

or FCN: WF13-422-3033 or P-TWO: 187098-30091 or equivalent.

Note (2) User's connector Part No:

Mating Wire Cable Connector Part No.: FI-X30H(JAE) or FI-X30HL(JAE)

Mating FFC Cable Connector Part No.: 217007-013001 (P-TWO) or JF05X030-1 (JAE).

Note (3) The first pixel is odd.

Note (4) Input signal of even and odd clock should be the same timing.

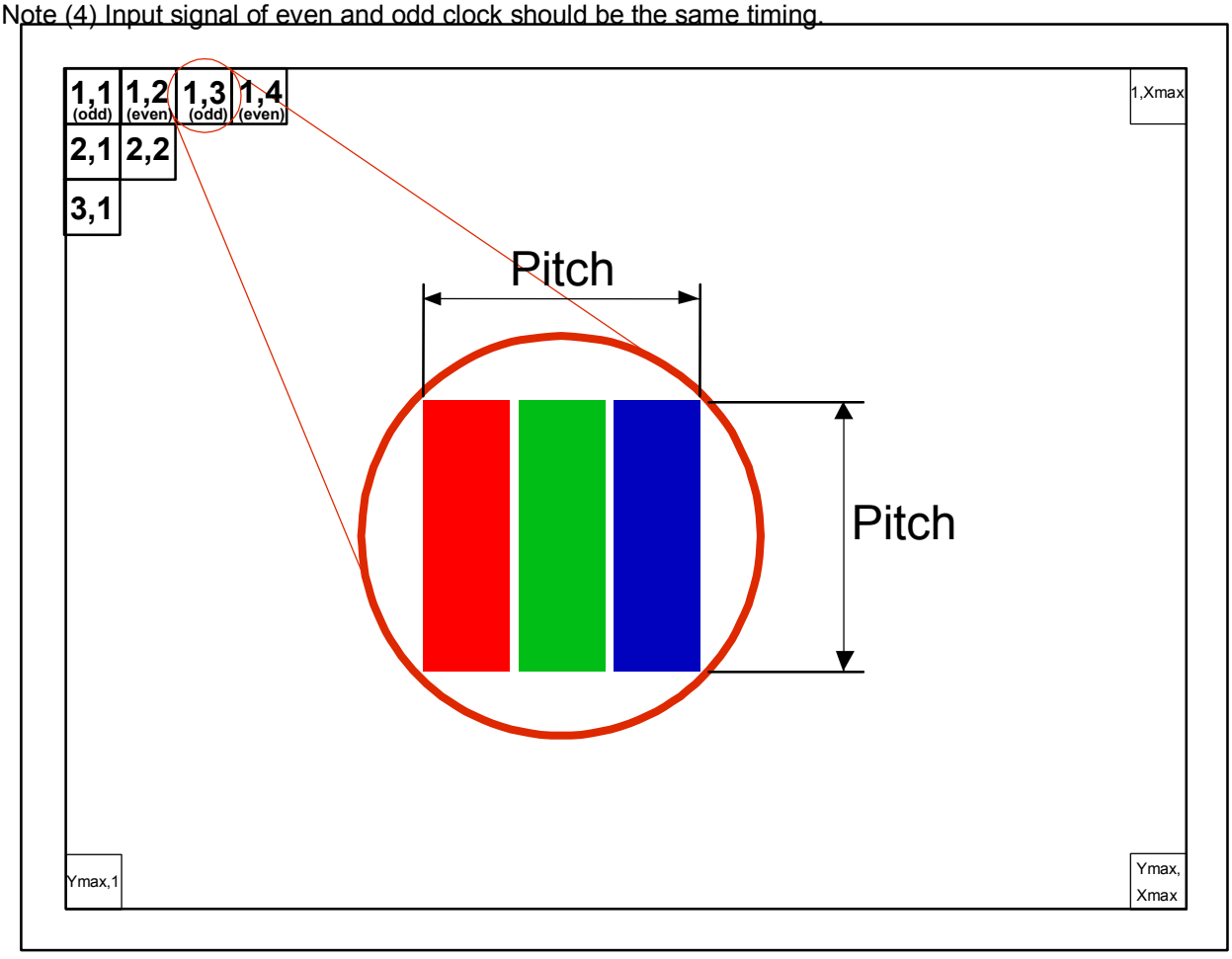

copyright belongs to InnoLux. Any unauthorized use is prohibited.

4.3 ELECTRICAL CHARACTERISTICS

4.3.1 LCD ELETRONICS SPECIFICATION

Parameter		Symbol	Value			Unit	Note
			Min.	Typ.	Max.		
Power Supply Voltage		Vcc	4.5	5.0	5.5	V	-
Ripple Voltage		V_{RP}	-	-	300	mV	-
Rush Current		I_{RUSH}	-	-	3	A	(2)
Power Supply Current	White		-	0.352	0.449	A	(3)a
	Black		-	0.351	0.434	A	(3)b
	Vertical Stripe		-	0.653	0.836	A	(3)c
Power Consumption		PLCD	-	3.266	4.29	Watt	(4)
LVDS differential input voltage		VID	100	-	600	mV	(5)
LVDS common input voltage		VCM	1.0	1.2	1.4	V	(5)
LVDS Logic High Input Voltage		VTH	-	-	0.1	V	(5)
LVDS Logic Low Input Voltage		VTL	-0.1	-		V	(5)

Note (1) The ambient temperature is Ta = 25 ± 2 ºC.

Note (2) Measurement Conditions:

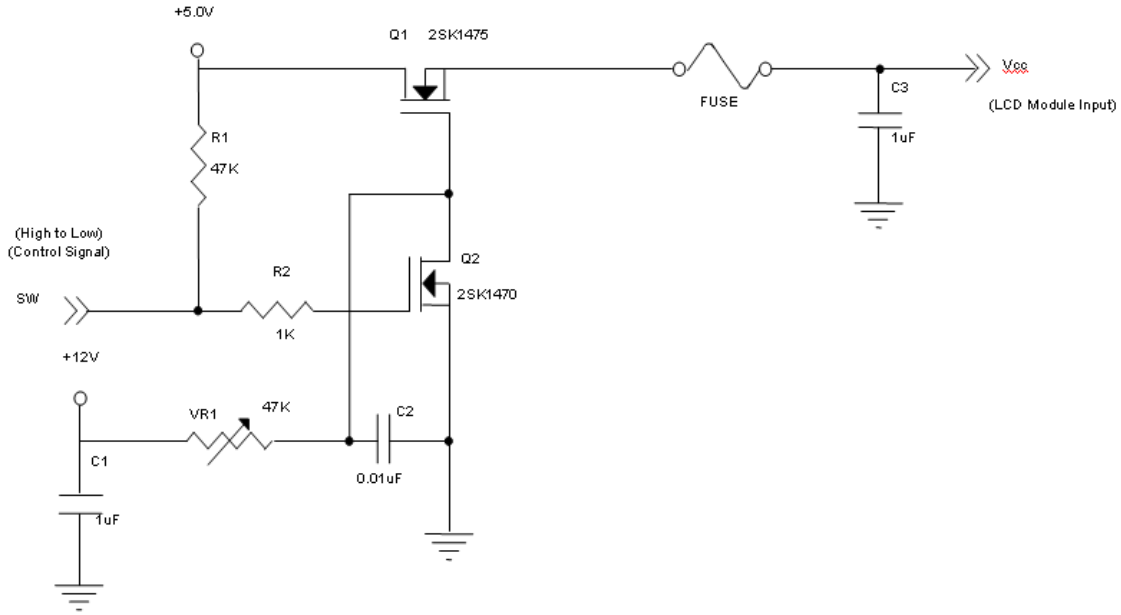

Vcc rising time is 470µs

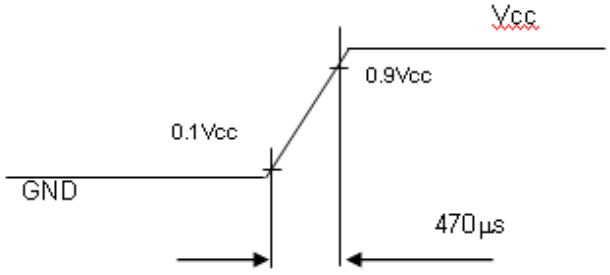

copyright belongs to InnoLux. Any unauthorized use is prohibited.

Note (3) The specified max power supply current is under the conditions at Vcc = 5.0 V, Ta = 25 ± 2 ºC, Fr = 60Hz, whereas a power dissipation check pattern below is displayed.

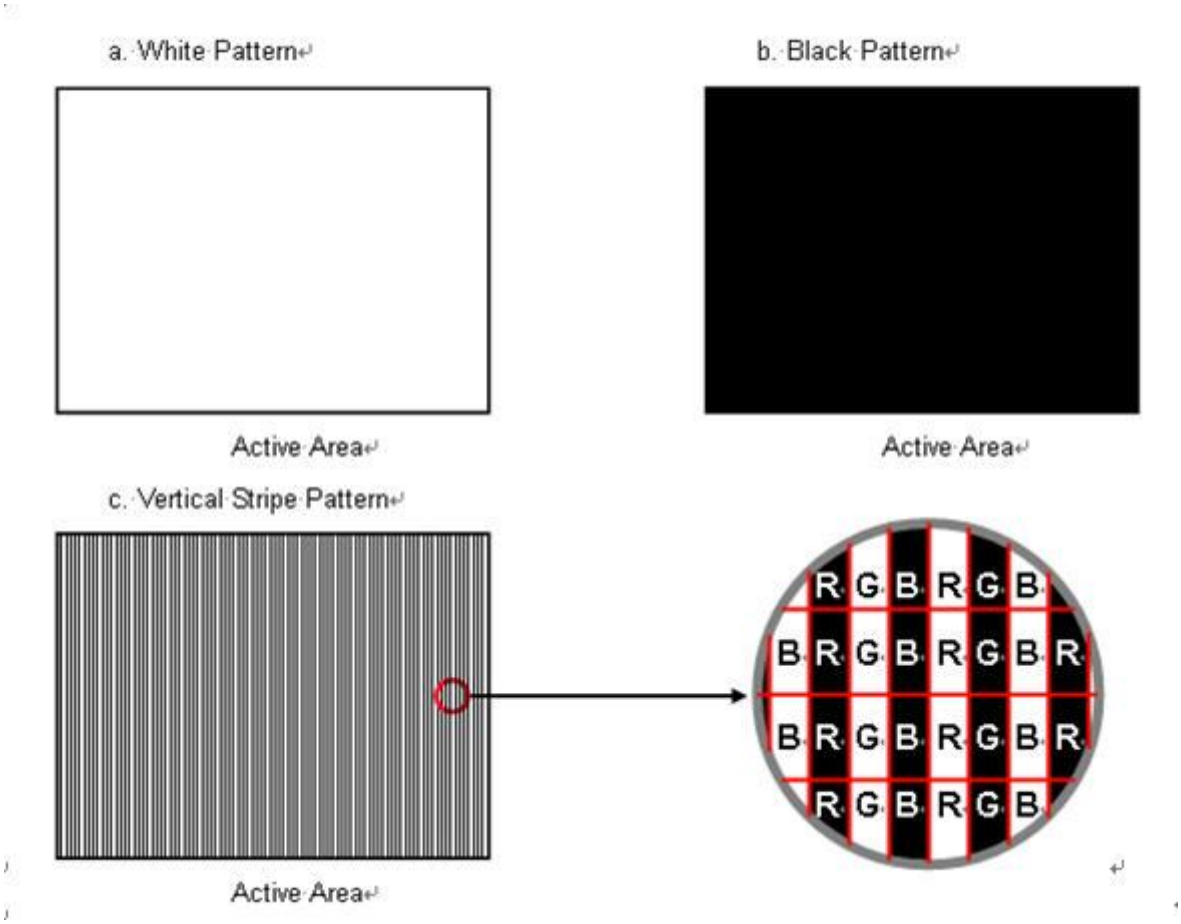

Note (4) The power consumption is specified at the pattern with the maximum current.

Note (5) The LVDS input characteristics are as follows:

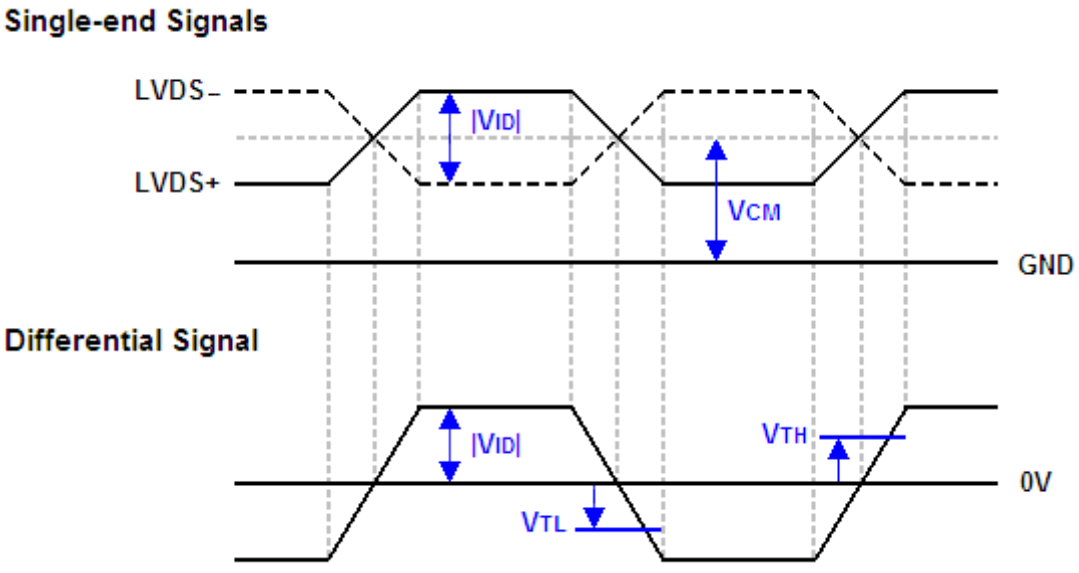

copyright belongs to InnoLux. Any unauthorized use is prohibited.

4.3.2 Vcc POWER DIP CONDITION

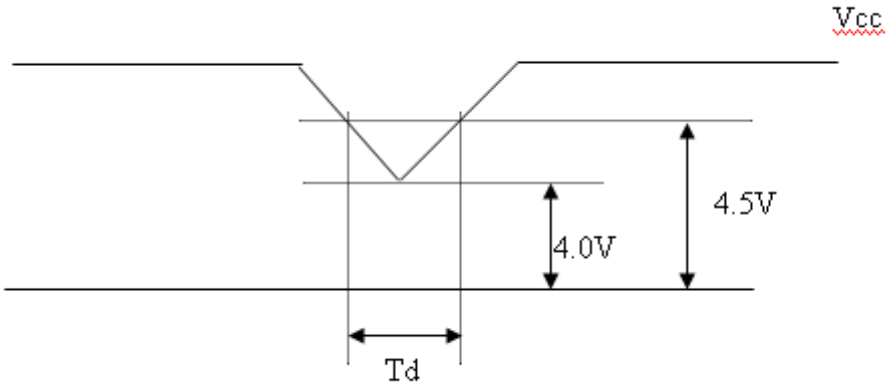

Dip condition:4.0≦Vcc≦4.5, Td≦20ms

4.3.3 BACKLIGHT UNIT

Parameter	Symbol	Value			Unit	Note
		Min.	Typ.	Max.		
LED Light Bar Input Voltage Per Input Pin	VPIN	48.6	54	59.4	V	(1), Duty=100%, IPIN=70mA
LED Light Bar Current Per Input Pin	IPIN	---	70	73.5	mA	(1), (2) Duty=100%
LED Life Time	LLED	30000			Hrs	(3)
Power Consumption	PBL	---	15.12	16.632	W	(1) Duty=100%, IPIN=70mA

Note (1) LED light bar input voltage and current are measured by utilizing a true RMS multimeter as shown below:

Note (2) PBL(Typ) = IPIN(Typ) × VPIN(Typ) × (4) PBL(Max) = IPIN(TYP) × VPIN(Max) × (4) input pins..

Note (3) The lifetime of LED is defined as the time when LED packages continue to operate under the conditions at Ta = 25 ±2 ℃ and I= (90)mA (per chip) until the brightness becomes ≦ 50% of its original value.

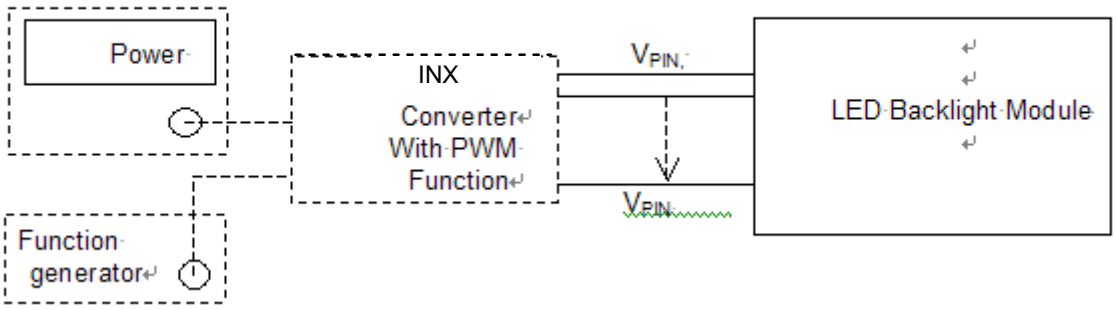

copyright belongs to InnoLux. Any unauthorized use is prohibited.

4.3.4 LIGHTBAR CONNECTOR PIN ASSIGNMENT

Connector: WM13-406-063N (FCN) or Compatible

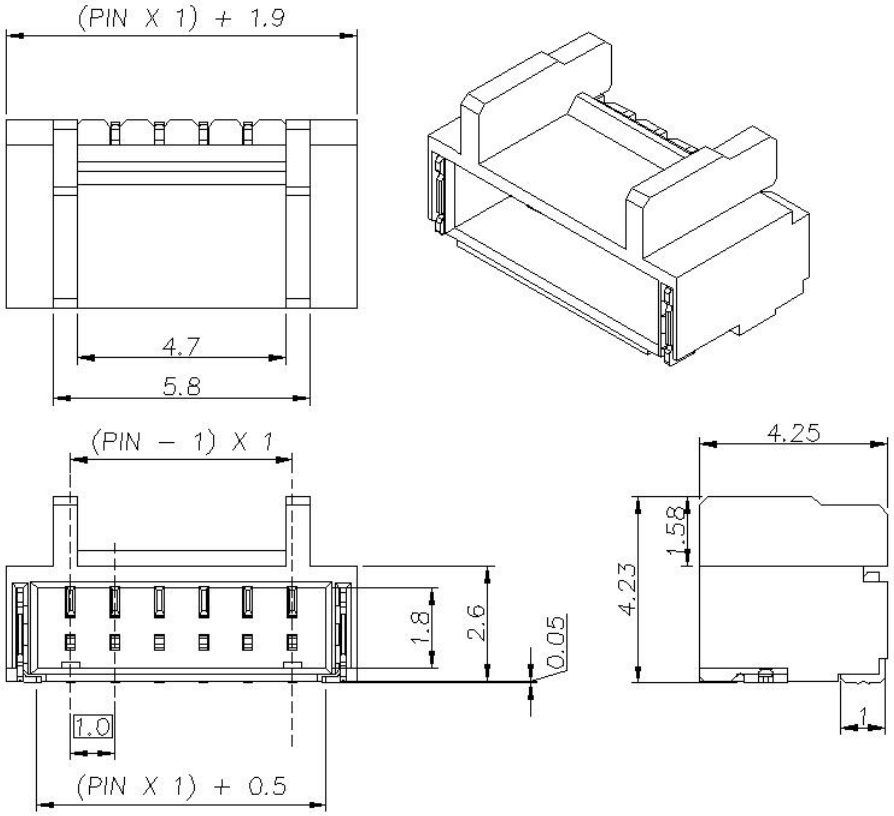

CN1

Pin number	Description
1	Cathode of LED string
2	Cathode of LED string
3	VLED
4	VLED
5	Cathode of LED string
6	Cathode of LED string

Note(1) Connector(wire type):FCN(WM13-406-063N) or equivalent.

Note(2) User's mating connector part No.: FCN(WF1300106-B) and hook width must be less than 4.5mm.

copyright belongs to InnoLux. Any unauthorized use is prohibited.

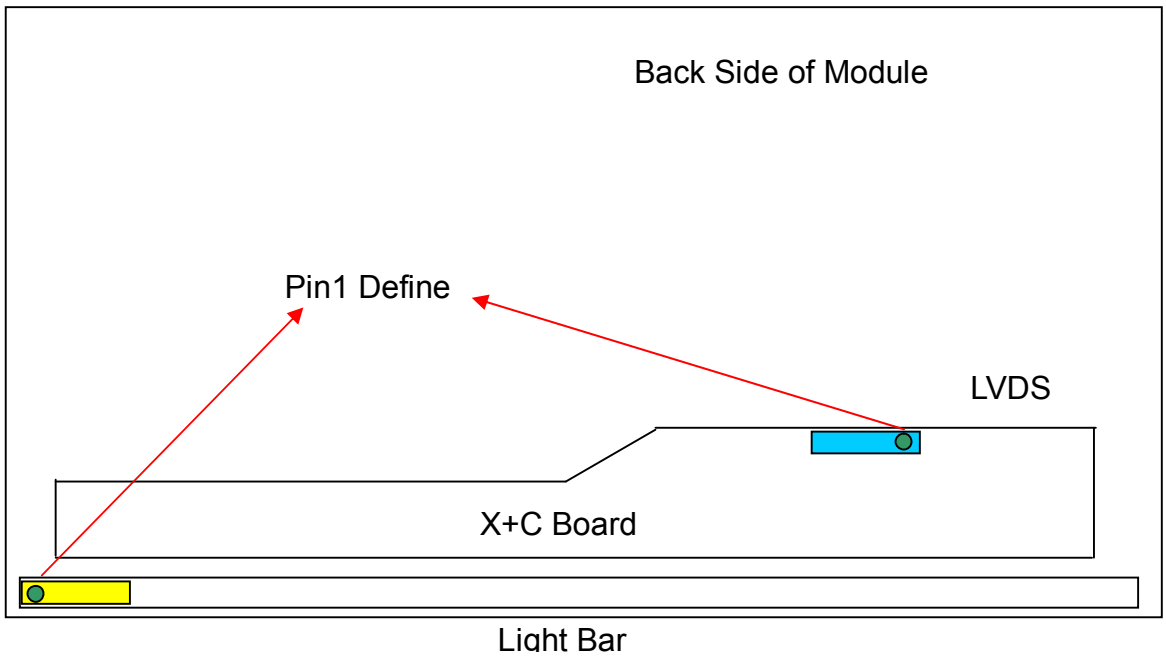

4.4 LVDS INPUT SIGNAL SPECIFICATIONS

4.4.1 LVDS DATA MAPPING TABLE

LVDS Channel O0	LVDS output	D7	D6	D4	D3	D2	D1	D0
	Data order	OG0	OR5	OR4	OR3	OR2	OR1	OR0
LVDS Channel O1	LVDS output	D18	D15	D14	D13	D12	D9	D8
	Data order	OB1	OB0	OG5	OG4	OG3	OG2	OG1
LVDS Channel O2	LVDS output	D26	D25	D24	D22	D21	D20	D19
	Data order	DE	NA	NA	OB5	OB4	OB3	OB2
LVDS Channel O3	LVDS output	D23	D17	D16	D11	D10	D5	D27
	Data order	NA	OB7	OB6	OG7	OG6	OR7	OR6
LVDS Channel E0	LVDS output	D7	D6	D4	D3	D2	D1	D0
	Data order	EG0	ER5	ER4	ER3	ER2	ER1	ER0
LVDS Channel E1	LVDS output	D18	D15	D14	D13	D12	D9	D8
	Data order	EB1	EB0	EG5	EG4	EG3	EG2	EG1
LVDS Channel E2	LVDS output	D26	D25	D24	D22	D21	D20	D19
	Data order	DE	NA	NA	EB5	EB4	EB3	EB2
LVDS Channel E3	LVDS output	D23	D17	D16	D11	D10	D5	D27
	Data order	NA	EB7	EB6	EG7	EG6	ER7	ER6

copyright belongs to InnoLux. Any unauthorized use is prohibited.

4.4.2 COLOR DATA INPUT ASSIGNMENT

The brightness of each primary color (red, green and blue) is based on the 8-bit gray scale data input for the color. The higher the binary input, the brighter the color. The table below provides the assignment of color versus data input.

Color		Data Signal																							
		Red								Green								Blue							
		R7	R6	R5	R4	R3	R2	R1	R0	G7	G6	G5	G4	G3	G2	G1	G0	B7	B6	B5	B4	B3	B2	B1	B0
Basic Colors	Black	0	0	0	0	0	0	0	0	0	0	0	0	0	0	0	0	0	0	0	0	0	0	0	0
	Red	1	1	1	1	1	1	1	1	0	0	0	0	0	0	0	0	0	0	0	0	0	0	0	0
	Green	0	0	0	0	0	0	0	0	1	1	1	1	1	1	1	1	0	0	0	0	0	0	0	0
	Blue	0	0	0	0	0	0	0	0	0	0	0	0	0	0	0	0	1	1	1	1	1	1	1	1
	Cyan	0	0	0	0	0	0	0	0	1	1	1	1	1	1	1	1	1	1	1	1	1	1	1	1
	Magenta	1	1	1	1	1	1	1	1	0	0	0	0	0	0	0	0	1	1	1	1	1	1	1	1
	Yellow	1	1	1	1	1	1	1	1	1	1	1	1	1	1	1	1	0	0	0	0	0	0	0	0
	White	1	1	1	1	1	1	1	1	1	1	1	1	1	1	1	1	1	1	1	1	1	1	1	1
Gray Scale Of Red	Red(0) / Dark	0	0	0	0	0	0	0	0	0	0	0	0	0	0	0	0	0	0	0	0	0	0	0	0
	Red(1)	0	0	0	0	0	0	0	1	0	0	0	0	0	0	0	0	0	0	0	0	0	0	0	0
	Red(2)	0	0	0	0	0	0	1	0	0	0	0	0	0	0	0	0	0	0	0	0	0	0	0	0
	:	:	:	:	:	:	:	:	:	:	:	:	:	:	:	:	:	:	:	:	:	:	:	:	:
	:	:	:	:	:	:		:		:		:		:	:	:			:		:	:	:	:	
	Red(253)	1	1	1	1	1	1	0	1	0	0	0	:0	0	0	0	0	0	0	0	0	0	0	0	:0
	Red(254)	1	1	1	1	1	1	1	0	0	0	0	0	0	0	0	0	0	0	0	0	0	0	0	0
	Red(255)	1	1	1	1	1	1	1	1	0	0	0	0	0	0	0	0	0	0	0	0	0	0	0	0
Gray Scale Of Green	Green(0) / Dark	0	0	0	0	0	0	0	0	0	0	0	0	0	0	0	0	0	0	0	0	0	0	0	0
	Green(1)	0	0	0	0	0	0	0	0	0	0	0	0	0	0	0	1	0	0	0	0	0	0	0	0
	Green(2)	0	0	0	0	0	0	0	0	0	0	0	0	0	0	1	0	0	0	0	0	0	0	0	0
	:	:	:	:	:	:	:	:	:	:	:	:	:	:	:	:	:	:	:	:	:	:	:	:	:
	:	:	:	:	:	:	:	:	:	:	:	:	:	:	:	:	:	:	:	:	:	:	:	:	:
	Green(253)	0	0	0	0	0	0	0	0	1	1	1	1	1	1	0	1	0	0	0	0	0	0	0	0
	Green(254)	0	0	0	0	0	0	0	0	1	1	1	1	1	1	1	0	0	0	0	0	0	0	0	0
	Green(255)	0	0	0	0	0	0	0	0	1	1	1	1	1	1	1	1	0	0	0	0	0	0	0	0
Gray Scale Of Blue	Blue(0) / Dark	0	0	0	0	0	0	0	0	0	0	0	0	0	0	0	0	0	0	0	0	0	0	0	0
	Blue(1)	0	0	0	0	0	0	0	0	0	0	0	0	0	0	0	0	0	0	0	0	0	0	0	1
	Blue(2)	0	0	0	0	0	0	0	0	0	0	0	0	0	0	0	0	0	0	0	0	0	0	1	0
	:	:	:	:	:	:	:	:	:	:	:	:	:	:	:	:	:	:	:	:	:	:	:	:	:
	:	:	:	:	:	:	:	:	:	:	:	:	:	:	:	:	:	:	:	:	:	:	:	:	:
	Blue(253)	0	0	0	0	0	0	0	0	0	0	0	0	0	0	0	0	1	1	1	1	1	1	0	1
	Blue(254)	0	0	0	0	0	0	0	0	0	0	0	0	0	0	0	0	1	1	1	1	1	1	1	0
	Blue(255)	0	0	0	0	0	0	0	0	0	0	0	0	0	0	0	0	1	1	1	1	1	1	1	1

Note (1) 0: Low Level Voltage, 1: High Level Voltage

copyright belongs to InnoLux. Any unauthorized use is prohibited.

4.5 DISPLAY TIMING SPECIFICATIONS

The input signal timing specifications are shown as the following table and timing diagram.

Signal	Item	Symbol	Min.	Typ.	Max.	Unit	Note
LVDS Clock	Frequency	Fc	58.54	74.25	97.98	MHz	-
	Period	Tc	-	13.47	-	ns	
	Input cycle to cycle jitter	T_{rcl}	-0.02*Tc	-	0.02*Tc	ns	(1)
	Input Clock to data skew	TLVCCS	-0.02*Tc	-	0.02*Tc	ps	(2)
	Spread spectrum modulation range	F_{clkin_mod}	0.97*Fc	-	1.03*Fc	MHz	(3)
	Spread spectrum modulation frequency	F_{SSM}	-	-	100	KHz	
Vertical Display Term	Frame Rate	Fr	50	60	75	Hz	Tv=Tvd+Tvb
	Total	Tv	1115	1125	1136	Th	-
	Active Display	Tvd	1080	1080	1080	Th	-
	Blank	Tvb	35	45	56	Th	-
Horizontal Display Term	Total	Th	1050	1100	1150	Tc	Th=Thd+Thb
	Active Display	Thd	960	960	960	Tc	-
	Blank	Thb	90	140	190	Tc	-

Note: Because this module is operated by DE only mode, Hsync and Vsync input signals are ignored.

Fc = Fr X Tv X Th

Please make sure the range of pixel clock has follow the below equation and Fc, Fr, Tv , Th not allowed to get beyond the min or max spec.

INPUT SIGNAL TIMING DIAGRAM

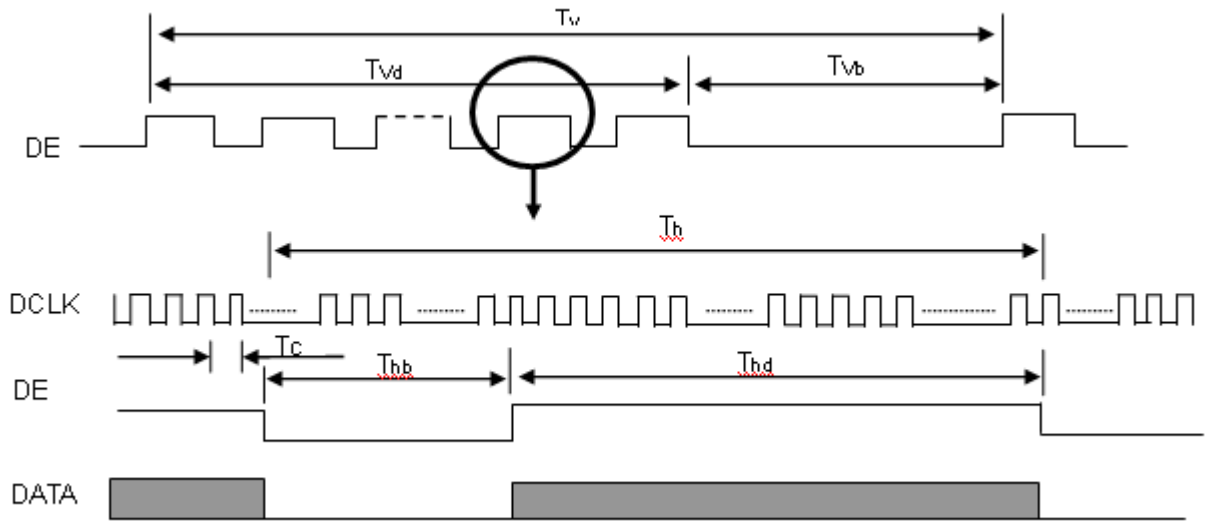

copyright belongs to InnoLux. Any unauthorized use is prohibited.

Note (1) The input clock cycle-to-cycle jitter is defined as below figures. Trcl = I T_1 – TI

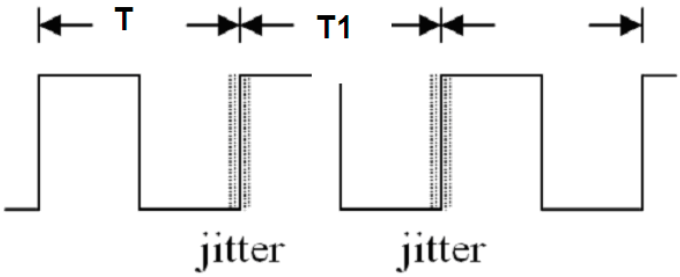

Note (2) Input Clock to data skew is defined as below figures.

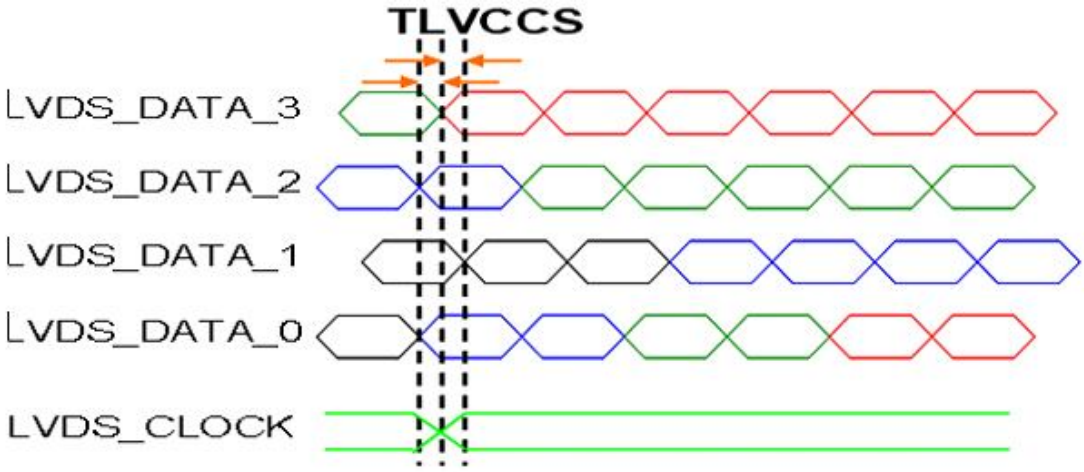

Note (3) The SSCG (Spread spectrum clock generator) is defined as below figures.

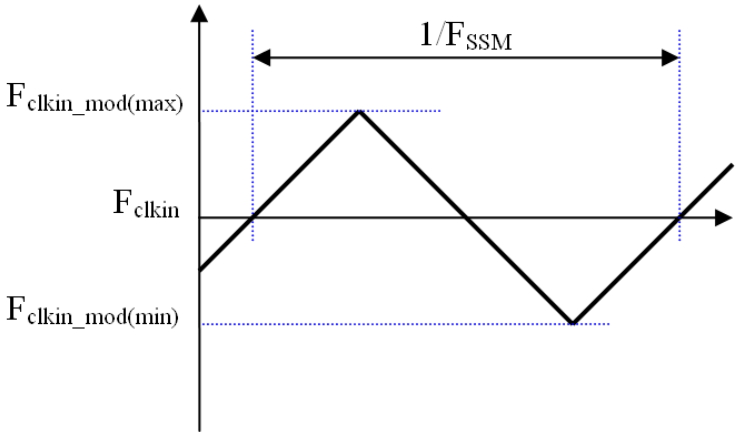

Note(4) The DCLK range at last line of V-blank should be set in 0 to Hdisplay/2

copyright belongs to InnoLux. Any unauthorized use is prohibited.

4.6 POWER ON/OFF SEQUENCE

The power sequence specifications are shown as the following table and diagram.

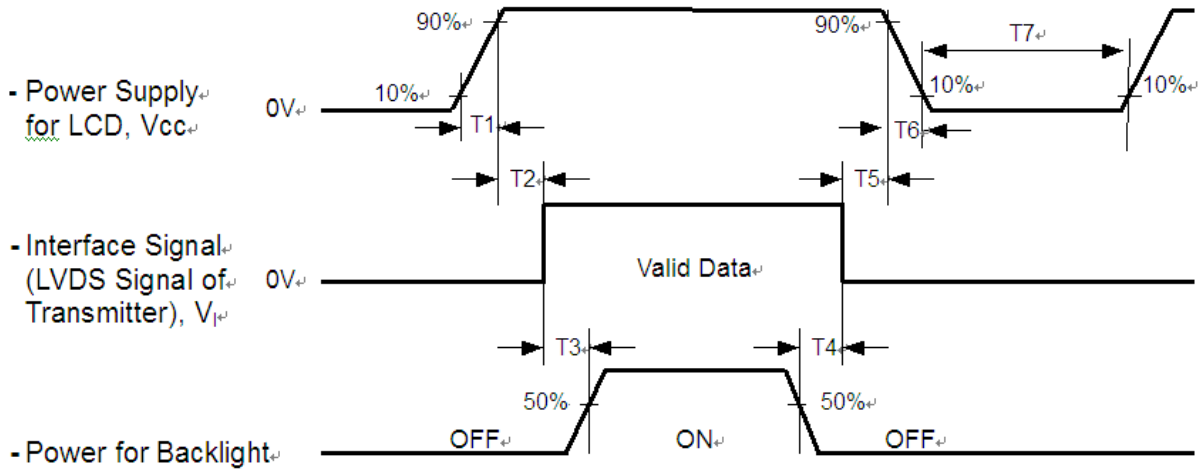

Timing Specifications:

Parameters	Values			Units
	Min	Typ.	Max	
T1	0.5	-	10	ms
T2	0	30	50	ms
T3	450	-	-	ms
T4	100	250	-	ms
T5	0	20	50	ms
T6	0.1	-	100	ms
T7	1000	-	-	ms

Note (1) The supply voltage of the external system for the module input should be the same as the definition of Vcc.

Note (2) When the backlight turns on before the LCD operation of the LCD turns off, the display may momentarily become abnormal screen.

Note (3) In case of VCC = off level, please keep the level of input signals on the low or keep a high impedance.

Note (4) T7 should be measured after the module has been fully discharged between power off and on period.

Note (5) Interface signal shall not be kept at high impedance when the power is on.

Note (6) CMI won’ t take any responsibility for the products which are damaged by the customers not following the Power Sequence.

Note (7) There might be slight electronic noise when LCD is turned off (even backlight unit is also off). To avoid this symptom, we suggest "Vcc falling timing" to follow "t6 spec".

copyright belongs to InnoLux. Any unauthorized use is prohibited.

5. OPTICAL CHARACTERISTICS

5.1 TEST CONDITIONS

Item	Symbol	Value	Unit
Ambient Temperature	Ta	25±2	°C
Ambient Humidity	Ha	50±10	%RH
Supply Voltage	V_{CC}	5	V
Input Signal	According to typical value in "3. ELECTRICAL CHARACTERISTICS"		
LED Light Bar Input Current Per Input Pin	I_{PIN}	70	mA_{DC}
PWM Duty Ratio	D	100	%
LED Light Bar Test Converter	CMI 35-D080484		

5.2 OPTICAL SPECIFICATIONS

The relative measurement methods of optical characteristics are shown in 5.2. The following items should be measured under the test conditions described in 5.1 and stable environment shown in Note (5).

Item		Symbol	Condition	Min.	Typ.	Max.	Unit	Note
Color Chromaticity (CIE 1931)	Red	Rx	θ_x=0°, θ_Y =0° CS-2000 R=G=B=255 Gray scale	Typ – 0.03	0.650	Typ + 0.03	-	(1), (5)
		Ry			0.335			
	Green	Gx			0.314			
		Gy			0.620			
	Blue	Bx			0.152			
		By			0.060			
	White	Wx			0.313			
		Wy			0.329			
Center Luminance of White (Center of Screen)		L_C		280	350	-	cd/m^2	(4), (5)
Contrast Ratio		CR		700	1000	-	-	(2), (5)
Response Time		T_R	θ_x=0°, θ_Y =0°	-	8	13	ms	(3)
		T_F			7	12		
		T_{GtG_AVE}		-	14			
White Variation		δW	θ_x=0°, θ_Y =0°	75			%	(5), (6)
Viewing Angle	Horizontal	θx- + θx+	CR ≧ 10	170	178	-	Deg.	(1), (5)
	Vertical	θy- + θy+		170	178	-		

copyright belongs to InnoLux. Any unauthorized use is prohibited.

Note (1) Definition of Viewing Angle (θx, θy):

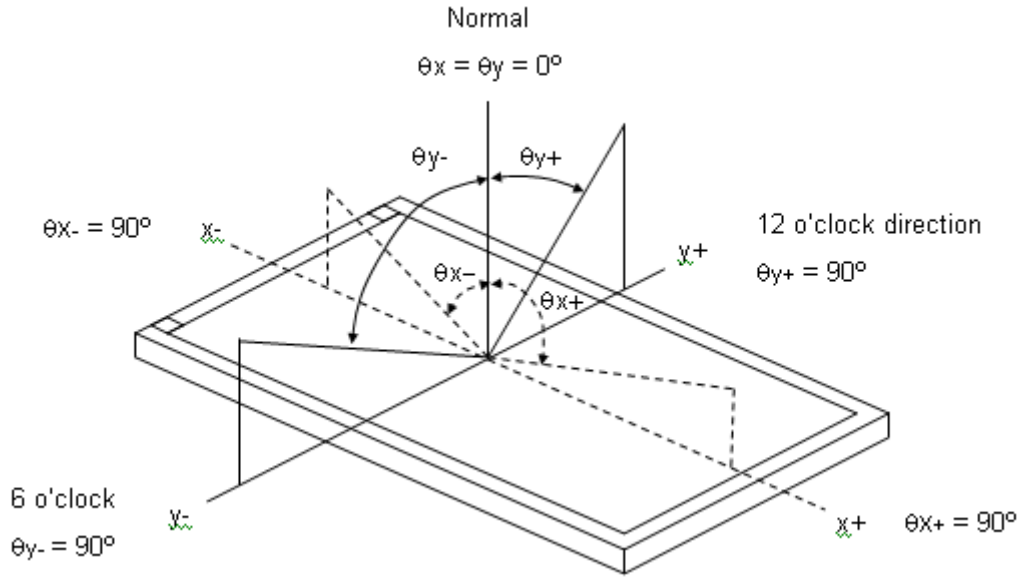

Note (2) Definition of Contrast Ratio (CR):

The contrast ratio can be calculated by the following expression.

Contrast Ratio (CR) = L255 / L0

L255: Luminance of gray level 255

L 0: Luminance of gray level 0

CR = CR (5)

CR (X) is corresponding to the Contrast Ratio of the point X at Figure in Note (6).

Note (3) Definition of Response Time：

-The T_R is the rising-time means the transition time from “Full-Black (gray 0)” to “Full-White (gray 255)” and the T_F is the falling-time means the transition time from “Full-White (gray 255)” to “Full-White (gray 0)” as the following figure.(Measured by TEKTRONIX TDS3054B).

-The T_{GtG} is the response time means the transition time from “Gray N” to “Gray M” (N,M=0~255).

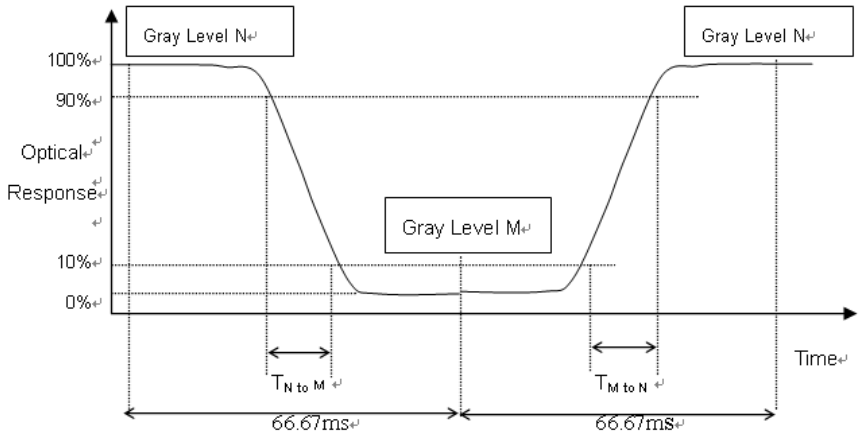

copyright belongs to InnoLux. Any unauthorized use is prohibited.

- T_{GtG_AVE} is the total average of the T_{GtG} data (Measured by INX GTG instrument)
- The gray (N,M) stands for the (0,31,63,~255) as the following table.
- If system uses ODC (Over Driving Circuit) function, T_{GtG_AVE} may be 5ms~10ms.

* It depends on Overshoot rate.

Gray to Gray		Rising time								
		0	31	63	95	127	159	191	223	255
Falling time	0									
	31									
	63									
	95									
	127									
	159									
	191									
	223									
	255									

Note (4) Definition of Luminance of White (L_C):

Measure the luminance of gray level 255 at center point

L_C = L (5)

L (x) is corresponding to the luminance of the point X at Figure in Note (6).

Note (5) Measurement Setup:

The LCD module should be stabilized at given temperature for 40 minutes to avoid abrupt temperature change during measuring. In order to stabilize the luminance, the measurement should be executed after lighting Backlight for 40 minutes in a windless room.

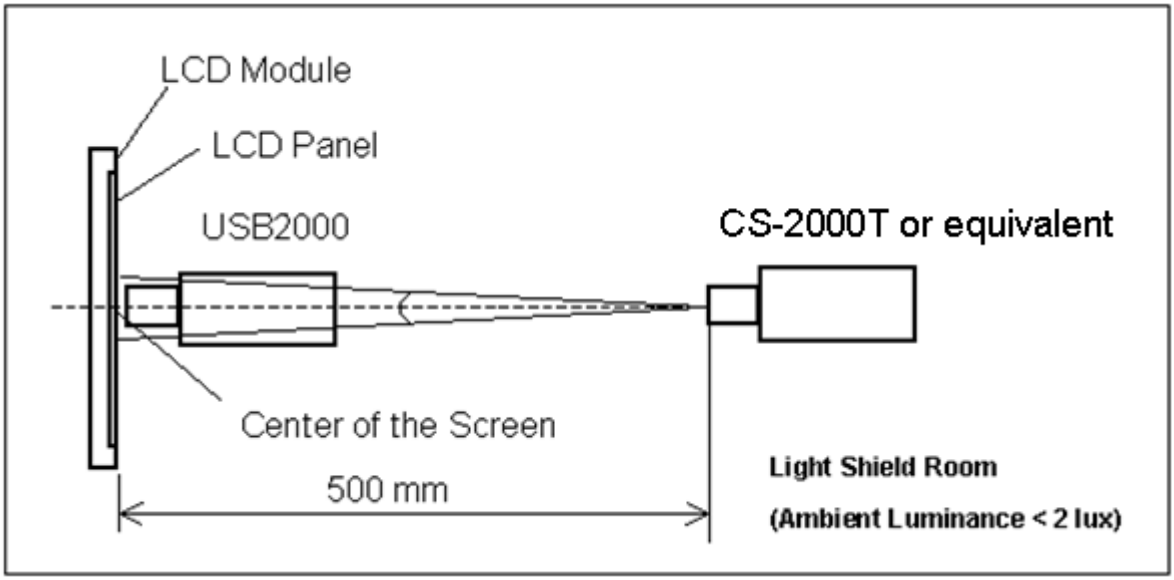

Note (6) Definition of White Variation (δW):

Measure the luminance of gray level 255 at 9 points

δW = Minimum [L (1) ~ L (9)] / Maximum [L (1) ~ L (9)]

copyright belongs to InnoLux. Any unauthorized use is prohibited.

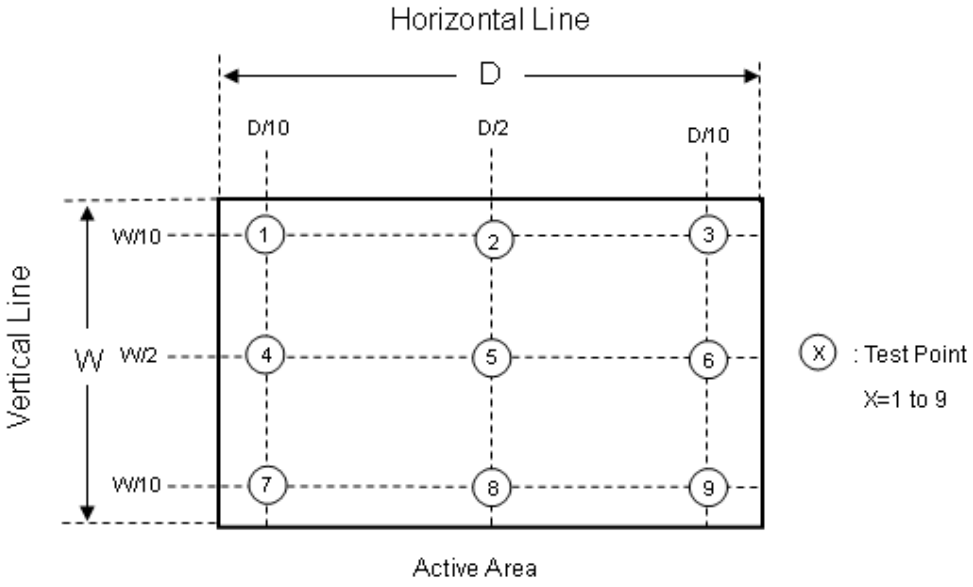

copyright belongs to InnoLux. Any unauthorized use is prohibited.

6. RELIABILITY TEST ITEM

Items	Required Condition	Note
Temperature Humidity Bias (THB)	Ta= 50℃ , 80%RH, 240hours	(1)(2) (4)(5)
High Temperature Operation (HTO)	Ta= 50℃ , 240hours	
Low Temperature Operation (LTO)	Ta= 0℃ , 240hours	
High Temperature Storage (HTS)	Ta= 60℃ , 240hours	
Low Temperature Storage (LTS)	Ta= -20℃ , 240hours	
Thermal Shock Test (TST)	-20℃/30min , 60℃ / 30min , 100 cycles	
Vibration Test (Non-operation)	Acceleration: 1.5 G Frequency: 10 - 300 Hz Sweep: 10 Minutes each (X, Y, Z)	(2)(3)
Shock Test (Non-operation)	Acceleration: 50 G Wave: sine Active Time: 11 ms Direction : ± X, ± Y, ± Z.(one time for each Axis)	(2)(3)

Note (1) There should be no condensation on the surface of panel during test

Note (2) Temperature of panel display surface area should 65℃ Max.

Note (3) At testing Vibration and Shock, the fixture in holding the module has to be hard and rigid enough so that the module would not be twisted or bent by the fixture.

Note (4) In the standard conditions, there is no function failure issue occurred All the cosmetic specification is judged before reliability test.

Note (5) Before cosmetic and function test, the product must have enough recovery time, at least 2 hours at room temperature

copyright belongs to InnoLux. Any unauthorized use is prohibited.

7. PACKAGING

7.1 PACKING SPECIFICATIONS

(1) 12 LCD modules / 1 Box

(2) Box dimensions: 620(L) X 348(W) X 430(H) mm

(3) Weight: approximately: 29.3kg (12 modules per box)

7.2 PACKAGING METHOD

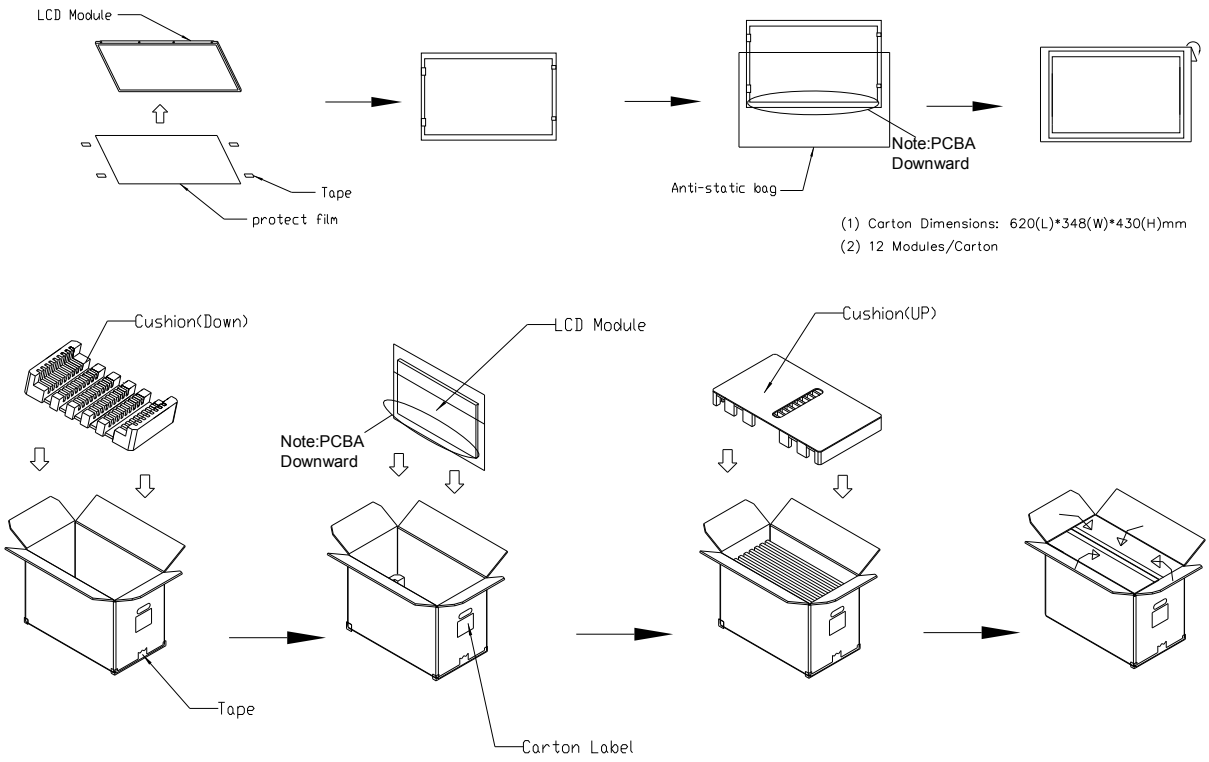

Figure 8-1 packing method

copyright belongs to InnoLux. Any unauthorized use is prohibited.

For ocean

Sea / Land Transportation (40ft HQ Container)

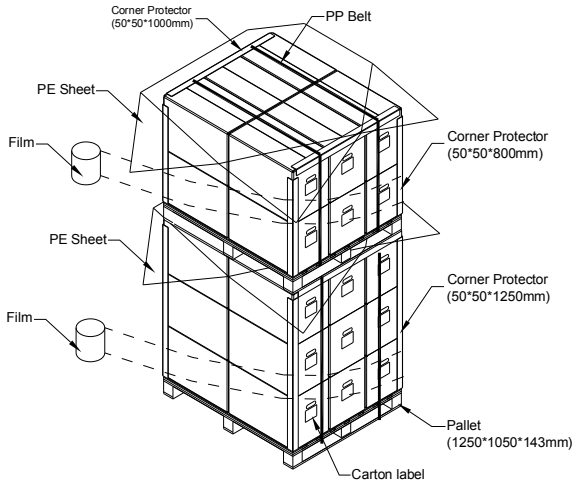

Sea / Land Transportation (40ft/20ft Container)

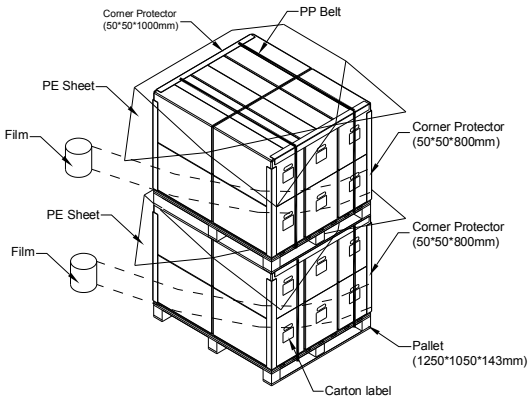

For air

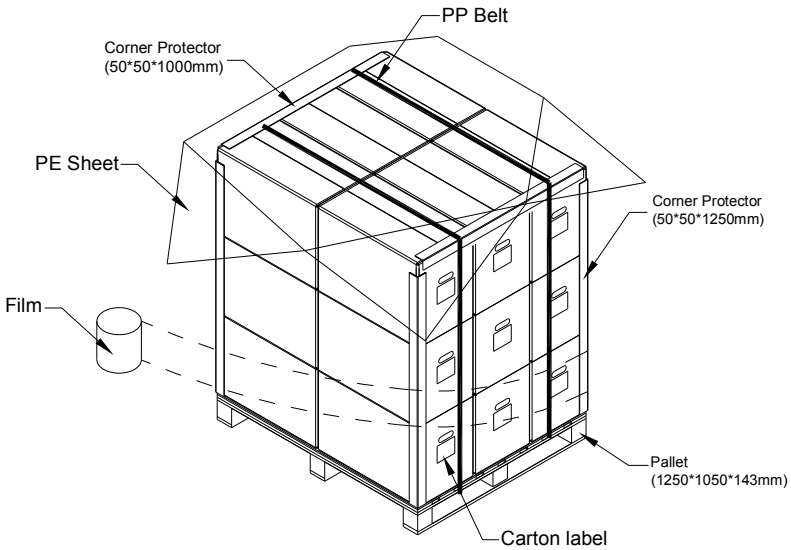

Figure 7-2 packing method

copyright belongs to InnoLux. Any unauthorized use is prohibited.

7.3 UN-PACKAGING METHOD

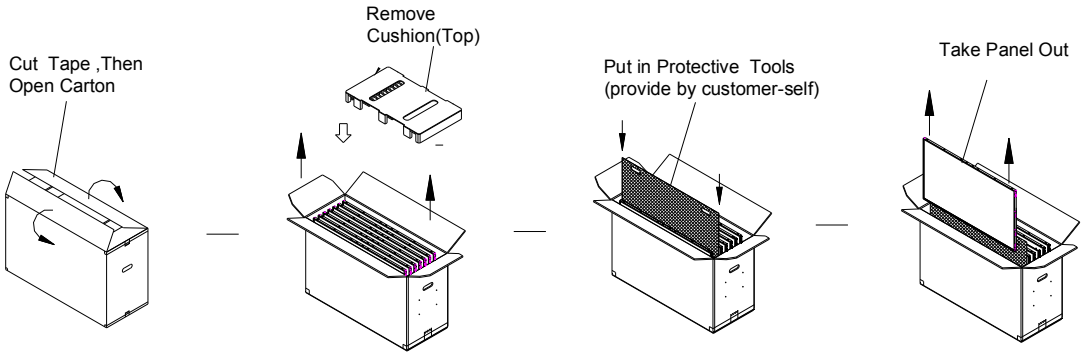

Figure 7-3 UN-packing method

copyright belongs to InnoLux. Any unauthorized use is prohibited.

8. INNOLUX MODULE LABEL

The barcode nameplate is pasted on each module as illustration, and its definitions are as following explanation.

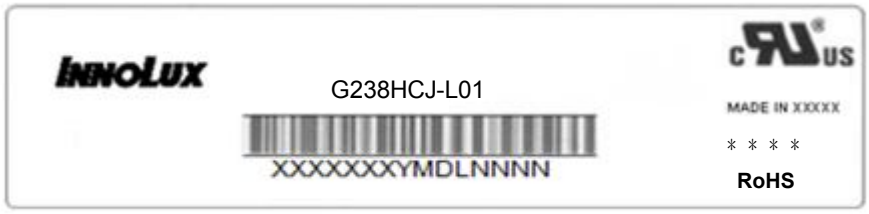

(a) Model Name: G238HCJ-L01

(b) * * * *: Factory ID

(c) Innolux barcode definition

Serial ID: XX-XX-X-XX-YMD-L-NNNN

Code	Meaning	Description
XX	Innolux internal use	-
XX	Revision	Cover all the change
X	Innolux internal use	-
XX	Innolux internal use	-
YMD	Year, month, day	Year: 0~9, 2001=1, 2002=2, 2003=3…2010=0, 2011=1, 2012=2… Month: 1~12=1, 2, 3, ~, 9, A, B, C Day: 1~31=1, 2, 3, ~, 9, A, B, C, ~, W, X, Y, exclude I, O, and U.
L	Product line #	Line 1=1, Line 2=2, Line 3=3, …
NNNN	Serial number	Manufacturing sequence of product

copyright belongs to InnoLux. Any unauthorized use is prohibited.

9. PRECAUTIONS

9.1 ASSEMBLY AND HANDLING PRECAUTIONS

(1) Do not apply rough force such as bending or twisting to the module during assembly.

(2) To assemble or install module into user's system can be only in clean working areas. The dust and oil may cause electrical short or worsen the polarizer.

(3) It's not permitted to have pressure or impulse on the module because the LCD panel and Backlight will be damaged.

(4) Always follow the correct power sequence when LCD module is connecting and operating. This can prevent damage to the CMOS LSI chips during latch-up.

(5) Do not pull the I/F connector in or out while the module is operating.

(6) Do not disassemble the module.

(7) Use a soft dry cloth without chemicals for cleaning, because the surface of polarizer is very soft and easily scratched.

(8) It is dangerous that moisture come into or contacted the LCD module, because moisture may damage LCD module when it is operating.

(9) High temperature or humidity may reduce the performance of module. Please store LCD module within the specified storage conditions.

(10)When ambient temperature is lower than 10ºC may reduce the display quality. For example, the response time will become slowly.

9.2 STORAGE PRECAUTIONS

(1) Do not leave the module in high temperature, and high humidity for a long time. It is highly recommended to store the module with temperature from 0℃ to 35℃ and relative humidity of less than 70%

(2) Do not store the TFT – LCD module in direct sunlight

(3) The module should be stored in dark place. It is prohibited to apply sunlight or fluorescent light in storing

9.3 OPERATION PRECAUTIONS

(1) The LCD product should be operated under normal condition.

Normal condition is defined as below :

Temperature : 20±15℃

Humidity: 65±20%

Display pattern : continually changing pattern(Not stationary)

(2) If the product will be used in extreme conditions such as high temperature,high humidity,high altitude ,display pattern or operation time etc…It is strongly recommended to contact Innolux for application engineering advice . Otherwise , Its reliability and function may not be guaranteed.

9.4 SAFETY PRECAUTIONS

(1) If the liquid crystal material leaks from the panel, it should be kept away from the eyes or mouth. In case of contact with hands, skin or clothes, it has to be washed away thoroughly with soap.

(2) After the module's end of life, it is not harmful in case of normal operation and storage.

copyright belongs to InnoLux. Any unauthorized use is prohibited.

9.5 SAFETY STANDARDS

The LCD module should be certified with safety regulations as follows:

(1) UL60950-1 or updated standard.

(2) IEC60950-1 or updated standard.

9.6 OTHER

When fixed patterns are displayed for a long time, remnant image is likely to occur.

copyright belongs to InnoLux. Any unauthorized use is prohibited.

Appendix. OUTLINE DRAWING

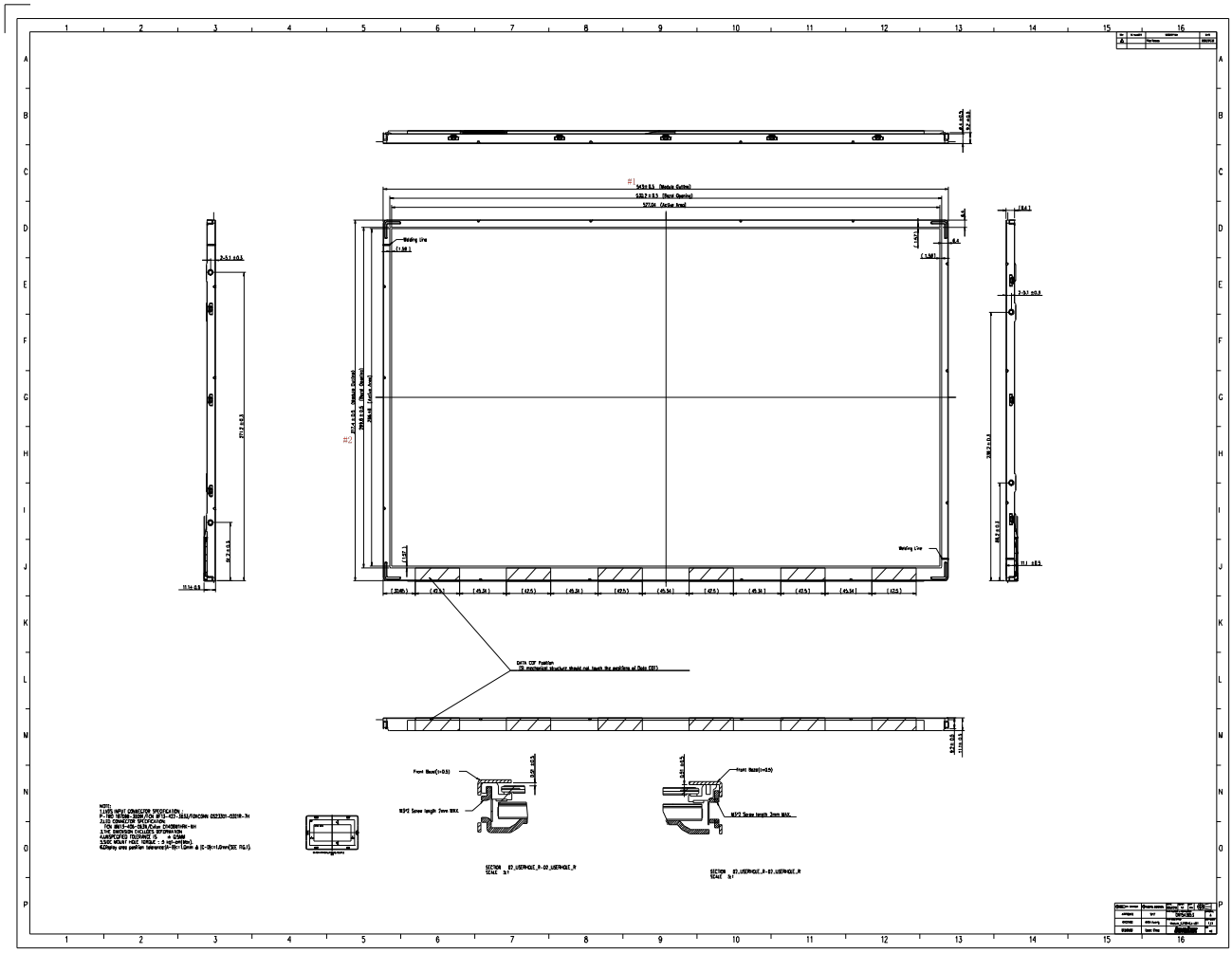

copyright belongs to InnoLux. Any unauthorized use is prohibited.

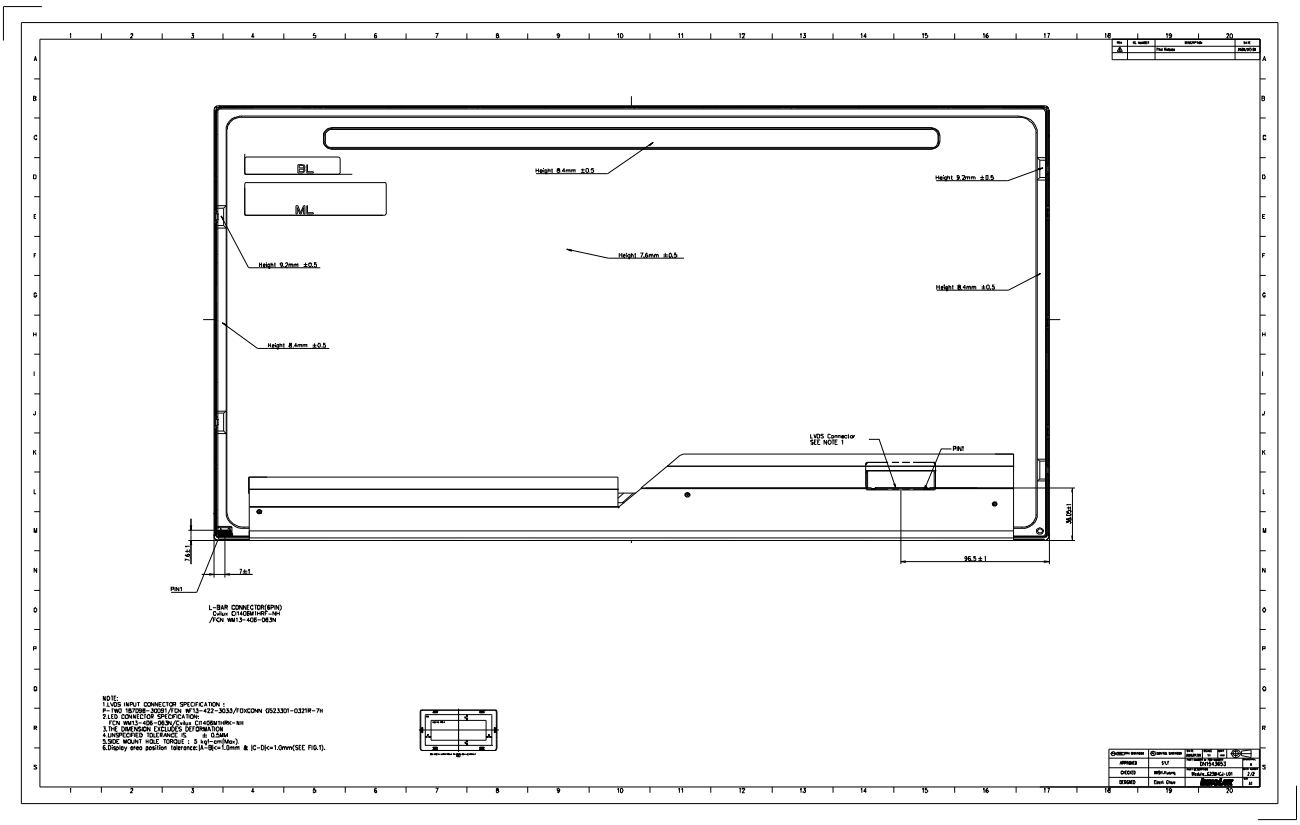

copyright belongs to InnoLux. Any unauthorized use is prohibited.